Chapter 296-62 WAC
Safety Standards for General Occupational Health Standards
(Form Number F414-042-000)

LAST UPDATED 01/18/2019

This book contains rules for Safety Standards for general occupational health standards, as adopted under the Washington Industrial Safety and Health Act of 1973 (Chapter 49.17 RCW).

The rules in this book are effective January 19, 2019. A brief promulgation history, set within brackets at the end of each section, gives statutory authority, administrative order of promulgation, and date of adoption of filing.

TO RECEIVE E-MAIL UPDATES:

- Sign up at https://public.govdelivery.com/accounts/WADLI/subscriber/new?topic_id=WADLI_19

TO PRINT OUR OWN PAPER COPY OR TO VIEW THE RULE ONLINE:

- Go to https://www.lni.wa.gov/safety-health/safety-rules/rules-by-chapter/?chapter=62

DOSH CONTACT INFORMATION:

- **Physical address:**
  7273 Linderson Way
  Tumwater, WA 98501-5414
  (Located off I-5 Exit 101 south of Tumwater)
- **Mailing address**:
  DOSH Standards and Information
  PO Box 44620, Olympia, WA 98504-4620
  Information telephone number is 1-800-423-7233
- For all L&I Contact information, visit https://www.lni.wa.gov/agency/contact/

Also available on the DOSH web site:

- DOSH Core Rules
- Other General Safety and Health Rules
- Industry and Task-specific Rules
- Proposed Rules and Hearings
- Newly adopted Rules and New Rule Information
- DOSH Directives (DD's)
- See https://www.lni.wa.gov/safety-health/

Table of Contents
296-62 WAC
General Occupational Safety and Health

Part A	**General WAC 296-62-005 through 296-62-050**
Part C-1	**Retain Department of Transportation Labeling WAC 296-62-055 through 296-62-05520**
Part D	**Controls and Definitions WAC 96-62-060**
Part F	**Carcinogens WAC 296-62-073 through 296-62-07316**
Part G	**Carcinogens (Specific) WAC 296-62-07329 through 296-62-07477**
Part I	**Airborne Contaminants WAC 296-62-07517 through 296-62-07660**
Part I-1	**Asbestos, Tremolite, Anthrophyllite, and Actinolite WAC 296-62-077 through 296-62-07755**
Part I-2	**Hexavalent Chromium WAC 296-62-08003 through 296-62-08029**
Part J-1	**Physical Agents WAC 296-62-090 through 296-62-09560**
Part L	**Atmospheres and Ventilation WAC 296-62-11015 through 296-62-13635**
Part N	**Cotton Dust WAC 296-62-14533 through 14543**
Part O	**Coke Ovens WAC 296-62 through 296-62-20029**
Part R	**Hazardous Drugs WAC 296-62-500 through 296-62-50055**
Statutory Authorities	**Pages i through xiv**

PART A
GENERAL

WAC **Page**

WAC 296-62-005 Occupational health and environmental control--Foreword. ***1***

WAC 296-62-010 Purpose and scope. **1**

WAC 296-62-020 Definitions applicable to all sections of this chapter. **1**

WAC 296-62-040 Unconstitutionality clause. **3**

WAC 296-62-050 Application for waiver or variances. **3**

WAC 296-62-005 Occupational health and environmental control--Foreword.

(1) **Foreword.**

(a) Modern industry is changing at an ever-increasing pace. New inventions, discoveries and developments cause changes in every facet of the industrial process. In keeping with this changing technology is the necessity to provide an adequate guide for the protection of working men and women. This chapter is for the guidance of both labor and management and to call particular attention to the way in which modernization and updating of the standards can be accomplished.

(b) This chapter is intended to cover as fully as is practical the environment in which work is performed. In addition to the suggestions made herein, the services of modern occupational medicine must also be considered. Occupational medicine with its specialized techniques for examination, diagnosis, and treatment adds another protection for the worker as he encounters newly-developed materials and methods.

(c) With the full realization that close cooperation between government and industry, labor and management, and all the health sciences, is essential, this chapter is promulgated for the health of all the workmen coming under the jurisdiction of the department of labor and industries.

(d) This chapter is promulgated in accordance with the applicable requirements as outlined in the Washington State Administrative Procedure Act (chapter 34.04 RCW) and other applicable statutes.

WAC 296-62-010 Purpose and scope.

The rules in this chapter are designed to protect the health of employees and help to create a healthy workplace by establishing requirements to control health hazards. Requirements for chemical hazard communication programs, workplace lighting levels and exposure records are in chapter 296-800 WAC, the safety and health core rules.

WAC 296-62-020 Definitions applicable to all sections of this chapter.

Unless the context indicates otherwise, words used in this chapter shall have the meaning given in this section.

Adequate or effective. Compliance with terms and intent of these standards.

Appendix. References or recommendations to be used as guides in applying the provisions of this chapter.

Approved. Approved by the director of the department of labor and industries or his authorized representative, or by an organization that is specifically named in a rule, such as Underwriters' Laboratories (UL), Mine Safety and Health Administration (MSHA), or the National Institute for Occupational Safety and Health (NIOSH).

Authorized person. A person approved or assigned by the employer to perform a specific type of duty or duties or to be at a specific location or locations at the job site.

Coal tar pitch volatiles. As used in WAC 296-62-07515, Table I, include the fused polycyclic hydrocarbons which volatilize from the distillation residues of coal, petroleum, (excluding asphalt), wood, and other organic matter. Asphalt (CAS 8052-42-4, and CAS 64742-93-4) is not covered under the "coal tar pitch volatiles" standard.

Competent person. One who is capable of identifying existing and predictable hazards in the surroundings or working conditions which are unsanitary, hazardous, or dangerous to employees, and who has authorization to take prompt corrective action to eliminate them.

Department. The department of labor and industries.

Director. The director of the department of labor and industries, or their designated representative.

Employer. Any person, firm, corporation, partnership, business trust, legal representative, or other business entity which engages in any business, industry, profession, or activity in this state and employs one or more employees or who contracts with one or more persons, the essence of which is the personal labor of such person or persons and includes the state, counties, cities, and all municipal corporations, public corporations, political subdivisions of the state, and charitable organizations: Provided, That any persons, partnership, or business entity not having employees, and who is covered by the industrial insurance act shall be considered both an employer and an employee.

Hazard. That condition, potential or inherent, which can cause injury, death, or occupational disease.

Occupational disease. Such disease or infection as arises naturally and proximately out of employment.

Qualified. One who, by possession of a recognized degree, certificate, or professional standing, or who by extensive knowledge, training, and experience, has successfully demonstrated ability to solve or resolve problems relating to the subject matter, the work, or the project.

Shall or must. Mandatory.

Should or may. Recommended.

Suitable. That which fits, or has the qualities or qualifications to meet a given purpose, occasion, condition, function, or circumstance.

Worker, personnel, person, employee, and other terms of like meaning. Unless the context of the provision containing such term indicates otherwise, mean an employee of an employer who is employed in the business of their employer whether by way of manual labor or otherwise and every person in this state who is engaged in the employment of or who is working under an independent contract the essence of which is their personal labor for an employer whether by manual labor or otherwise.

Work place. Any plant, yard, premises, room, or other place where an employee or employees are employed for the performance of labor or service over which the employer has the right of access or control. This includes, but is not limited to, all work places covered by industrial insurance under Title 51 RCW, as now or hereafter amended.

Abbreviations used in this chapter:

ANSI. American National Standards Institute.

ASHRE. American Society of Heating and Refrigeration Engineers.

BTU. British thermal unit.

BTUH. British thermal unit per hour.

CFM. Cubic feet per minute.

CFR. Code of Federal Register.

CGA. Compressed Gas Association.

ID. Inside diameter.

MCA. Manufacturing Chemist Association or Chemical Manufacturer Association (CMA).

NEMA. National Electrical Manufacturing Association.

NFPA. National Fire Protection Association.

OD. Outside diameter.

WAC. Washington Administrative Code.

WISHA. Washington Industrial Safety and Health Act (chapter 80, Laws of 1973).

WAC 296-62-040 Unconstitutionality clause.

In the event that any section, paragraph, sentence, clause, phrase or work of this chapter is declared unconstitutional or invalid for any reason the remainder of said standard or this chapter must not be affected thereby.

WAC 296-62-050 Application for waiver or variances.

See WAC 296-900-11005, Applying for a variance.

PART B-1
TRADE SECRETS

Note: Chapter 296-62 WAC, General occupational health standards, Part B-1, Trade secrets, (WAC 296-62-05301 through 296-62-05325 has been repealed. Please refer to WAC 296-901-14018 Trade secrets.

PART C-1
RETAIN DEPARTMENT OF TRANSPORTATION LABELING

WAC **Page**

WAC 296-62-055 Retain labeling required by the department of Transportation. 1

WAC 296-62-05510 Scope. 1

WAC 296-62-05520 Retain readily visible DOT labeling. 1

WAC 296-62-055 Retain labeling required by the department of transportation.

Your responsibility: To make sure DOT-required labeling on packages and containers in your workplace is retained to alert employees of potentially hazardous contents.

> *Note: Terms used in this rule are defined by the USDOT in Title 49 of the Code of Federal Regulations (CFR) Part 171. To access the CFR visit* http://www.dot.gov

WAC 296-62-05510 Scope.

This chapter applies to packages, freight containers, rail freight cars, motor vehicles, and transport vehicles required to be marked, or labeled by the U.S. Department of Transportation in Title 49 of the CFR, Parts 171-180.

WAC 296-62-05520 Retain readily visible DOT labeling.

You must retain readily visible DOT labeling as specified in Table 1.

Table 1 Specifications for Retaining DOT Labeling

If you receive	Retain DOT markings, placards and labels UNTIL:
• Packages of hazardous materials	• Hazardous materials are sufficiently removed – Packaging must be ■ cleaned of residue ■ purged of vapors
• Freight containers • Rail freight cars • Motor vehicles • Transport vehicles	• Hazardous materials are sufficiently removed
• Nonbulk packages that will not be reshipped	• You replace the DOT labeling with labeling that complies with WAC 296-901-140 Hazard communication

PART D
CONTROLS AND DEFINITIONS

WAC.....Page

WAC 296-62-060 Control requirements in addition to those specified.....1

WAC 296-62-060 Control requirements in addition to those specified.

> *Note: The requirements in this section apply only to agriculture. The requirements for general industry relating to control requirements have been moved to chapter 296-800 WAC, Safety and health core rules.*

(1) In those cases where no acceptable standards have been derived for the control of hazardous conditions, every reasonable precaution must be taken to safeguard the health of the worker whether provided herein or not.

(2) **Preservation of records.**

(a) Scope and application. This section applies to each employer who makes, maintains or has access to employee exposure records or employee medical records.

(b) **Definitions**.

(i) **Employee exposure record**. A record of monitoring or measuring which contains qualitative or quantitative information indicative of employee exposure to toxic materials or harmful physical agents. This includes both individual exposure records and general research or statistical studies based on information collected from exposure records.

(ii) **Employee medical record**. A record which contains information concerning the health status of an employee or employees exposed or potentially exposed to toxic materials or harmful physical agents. These records may include, but are not limited to:

(A) The results of medical examinations and tests;

(B) Any opinions or recommendations of a physician or other health professional concerning the health of an employee or employees; and

(C) Any employee medical complaints relating to workplace exposure. Employee medical records include both individual medical records and general research or statistical studies based on information collected from medical records.

(c) Preservation of records. Each employer who makes, maintains, or has access to employee exposure records or employee medical records must preserve these records.

(d) Availability of records. The employer must make available, upon request, to the director, department of labor and industries, or his designee, all employee exposure records and employee medical records for examination and copying.

(e) Effective date. This standard shall become effective thirty days after filing with the code reviser.

(3) **Monitoring of employees**. The department must use industrial hygiene sampling methods and techniques including but not limited to personal monitoring devices and equipment approved by the director or his designee for the purpose of establishing compliance with chapter 296-62 WAC.

(a) The employer must permit the director or his designee to monitor and evaluate any workplace or employee in accordance with all provisions of this subsection.

(b) The employer must not prevent or discourage an employee from cooperating with the department by restricting or inhibiting their participation in the use of personal monitoring devices and equipment in accordance with all provisions of this subsection.

PART F
CARCINOGENS

WAC **Page**

WAC 296-62-073 Carcinogens-Scope and application. 1

WAC 296-62-07302 Communication of hazards. 1

WAC 296-62-07304 Definitions. 2

WAC 296-62-07306 Requirements for areas containing carcinogens listed in WAC 296-62-07302. 3

WAC 296-62-07308 General regulated area requirements. 6

WAC 296-62-07310 Signs, information and training. 8

WAC 296-62-07312 Reports. 9

WAC 296-62-07314 Medical surveillance. 10

WAC 296-62-07316 Premixed solutions. 11

WAC 296-62-073 Carcinogens-Scope and application.

(1) All sections of this chapter which include WAC 296-62-073 in the section number apply to the manufacturing, processing, repackaging, releasing, handling or storing of carcinogens.

(2) This section shall not apply to solid or liquid mixtures containing less than 0.1 percent by weight or volume of the carcinogens listed in WAC 296-62-07302.

WAC 296-62-07302 Communication of hazards.

(1) **Hazard communication**.

(a) Chemical manufacturers, importers, distributors, and employers must comply with all requirements of the Hazard Communication Standard (HCS), WAC 296-901-140 for each carcinogen listed in subsection (2) of this section.

(b) In classifying the hazards of carcinogens listed in subsection (2) of this section, at least the hazards listed in subsection (2) of this section are to be addressed.

(c) Employers must include the carcinogens listed in subsection (2) of this section in the hazard communication program established to comply with the HCS, WAC 296-901-140. Employers must ensure that each employee has access to labels on containers of the carcinogens listed in subsection (2) of this section and to safety data sheets, and is trained in accordance with the requirements of HCS and subsection (2) of this section.

(2) **List of carcinogens**:

(a) 4-Nitrobiphenyl: Cancer (CAS 92-93-3).

(b) Alpha-Naphthylamine: Cancer; skin irritation; and acute toxicity effects (CAS 134-32-7).

(c) Methyl chloromethyl ether: Cancer; skin; eye and respiratory effects; acute toxicity effects; and flammability (CAS 107-30-2).

(d) 3,3'-Dichlorobenzidine (and its salts): Cancer and skin sensitization (CAS 91-94-1).

(e) Bis-Chloromethyl ether: Cancer; skin, eye, and respiratory tract effects; acute toxicity effects; and flammability (CAS 542-88-1).

(f) Beta-Naphthylamine: Cancer and acute toxicity effects (CAS 91-59-8).

(g) Benzidine: Cancer and acute toxicity effects (CAS 92-87-5).

(h) 4-Aminodiphenyl: Cancer (CAS 92-67-1).

(i) Ethyleneimine: Cancer; mutagenicity; skin and eye effects; liver effects; kidney effects; acute toxicity effects; and flammability (CAS 151-56-4).

(j) Beta-Propiolactone: Cancer; skin irritation; eye effects; and acute toxicity effects (CAS 57-57-8).

(k) 2-Acetylaminofluorene: Cancer (CAS 53-96-3).

(l) 4-Dimethylaminoazo-benzene: Cancer, skin effects; and respiratory tract irritation (CAS 60-11-7).

(m) N-Nitrosodimethylamine: Cancer; liver effects; and acute toxicity effects (CAS 62-75-9).

WAC 296-62-07304 Definitions.

The definitions set forth in this section apply throughout WAC 296-62-073 through 296-62-07316.

Absolute filter. Is one capable of retaining 99.97 percent of a mono disperse aerosol of 0.3 micron size particles.

Authorized employee. An employee whose duties require him to be in the regulated area and who has been specifically assigned to those duties by the employer.

Clean change room. A room where employees put on clean clothing and/or protective equipment in an environment free of carcinogens listed in WAC 296-62-07302. The clean change room shall be contiguous to and have an entry from a shower room, when the shower room facilities are otherwise required in this section.

Closed system. An operation involving carcinogens listed in WAC 296-62-07302 where containment prevents the release of carcinogens.

Decontamination. The inactivation of a carcinogen listed in WAC 296-62-07302 or its safe disposal.

Disposal. The safe removal of a carcinogen listed in WAC 296-62-07302 from the work environment.

Emergency. An unforeseen circumstance or set of circumstances resulting in the release of a carcinogen which may result in exposure to or contact with any carcinogen listed in WAC 296-62-07302.

External environment. Any environment external to regulated and nonregulated areas.

Isolated system. A fully enclosed structure other than the vessel of containment of a listed carcinogen which is impervious to the passage of listed carcinogens and which would prevent the entry of carcinogens into regulated areas, nonregulated areas, or the external environment, should leakage or spillage from the vessel of containment occur.

Laboratory-type hood. A device enclosed on three sides and the top and bottom, designed and maintained so as to draw air inward at an average linear face velocity of 150 feet per minute with a minimum of 125 feet per minute, designed, constructed and maintained such that an operation involving a listed carcinogen within the hood does not require the insertion of any portion of any employees' body other than his hands and arms.

Nonregulated area. Any area under the control of the employer where entry and exit is neither restricted nor controlled.

Open-vessel system. An operation involving listed carcinogens in an open vessel, which is not in an isolated system, a laboratory-type hood, nor in any other system affording equivalent protection against the entry of carcinogens into regulated areas, nonregulated areas, or the external environment.

Protective clothing. Clothing designed to protect an employee against contact with or exposure to listed carcinogens.

Regulated area. An area where entry and exit is restricted and controlled.

WAC 296-62-07306 Requirements for areas containing carcinogens listed in WAC 296-62-07302.

(1) A regulated area must be established by an employer where listed carcinogens are manufactured, processed, used, repackaged, released, handled or stored.

(2) All such areas must be controlled in accordance with the requirements for the following category or categories describing the operation involved:

(a) Isolated systems. Employees working with carcinogens within an isolated system such as a "glove box." must wash their hands and arms upon completion of the assigned task and before engaging in other activities not associated with the isolated system.

(b) Closed system operation. Within regulated areas where carcinogens are stored in sealed containers, or contained in a closed system including piping systems with any sample ports or openings closed while carcinogens are contained within:

(i) Access must be restricted to authorized employees only;

(ii) Employees must wash hands, forearms, face and neck upon each exit from the regulated areas, close to the point of exit and before engaging in other activities.

(c) Open vessel system operations. Open vessel system operations as defined in WAC 296-62-07304 are prohibited.

(d) Transfer from a closed system. Charging or discharging point operations, or otherwise opening a closed system. In operations involving "laboratory-type hoods," or in locations where a carcinogen is contained in an otherwise "closed system," but is transferred, charged, or discharged into other normally closed containers, the provisions of this section shall apply.

(i) Access must be restricted to authorized employees only;

(ii) Each operation must be provided with continuous local exhaust ventilation so that air movement is always from ordinary work areas to the operation. Exhaust air must not be discharged to regulated areas, nonregulated areas or the external environment unless decontaminated. Clean makeup air must be introduced in sufficient volume to maintain the correct operation of the local exhaust system.

(iii) Employees must be provided with, and required to wear, clean, full body protective clothing (smocks, coveralls, or long-sleeved shirt and pants), shoe covers and gloves prior to entering the regulated area.

(iv) Each employee engaged in handling operations involving the following carcinogens must be provided with and required to wear and use a NIOSH-certified self-contained breathing apparatus that has a full facepiece and is operated in a pressure-demand or other positive-pressure mode, or any supplied air respirator that has a full facepiece and is operated in a pressure-demand or other positive pressure mode in combination with an auxiliary self-contained positive-pressure breathing apparatus as required in chapter 296-842 WAC. A respirator affording higher levels of protection than this respirator may be substituted.

(A) Methyl Chloromethyl Ether;

(B) bis-Chloromethyl Ether;

(C) Ethylenemine;

(D) beta-Propiolactone;

(E) 4-Amino Diphenyl.

(v) Each employee engaged in handling operations involving the following carcinogens must be provided with, and required to wear and use, NIOSH-certified air-purifying, half-mask respirator with particulate filters as required in chapter 296-842 WAC. A respirator affording higher levels of protection than this respirator may be substituted.

(A) 4-Nitrobiphenyl;

(B) alpha-Naphthylamine;

(C) 4-4'Methylene bis (2-Chloroaniline);

(D) 3,3'Dichlorobenzidine (and its salts);

(E) beta-Naphthylamine;

(F) Benzidine;

(G) 2-acetylamino fluroene;

(H) 4-imethylaminoazobenzene;

(I) n-nitrosodimethylamine.

must be provided with, and required to wear and use, a half-face, filter-type respirator certified for solid or liquid particulates with minimum efficiency rating of 95% as required in chapter 296-842 WAC. A respirator affording higher levels of protection than this respirator may be substituted.

(vi) Prior to each exit from a regulated area, employees must remove and leave protective clothing and equipment at the point of exit and at the last exit of the day, to place used clothing and equipment in impervious containers at the point of exit for purposes of decontamination or disposal. The contents of such impervious containers must be identified, as required under WAC 296-62-07302.

(vii) Employees must wash hands, forearms, face and neck on each exit from the regulated area, close to the point of exit, and before engaging in other activities.

(viii) Employees must shower after the last exit of the day.

(ix) Drinking fountains are prohibited in the regulated area.

(e) Maintenance and decontamination activities. In cleanup of leaks or spills, maintenance or repair operations on contaminated systems or equipment, or any operations involving work in an area where direct contact with carcinogens could result, each authorized employee entering the area must:

(i) Be provided with and required to wear, clean, impervious garments, including gloves, boots and continuous-air supplied hood in accordance with WAC 296-800-160, and respiratory protective equipment required by this chapter 296-842 WAC;

(ii) Be decontaminated before removing the protective garments and hood;

(iii) Shower upon removing the protective garments and hood.

(f) Laboratory activities. The requirements of this subdivision shall apply to research and quality control activities involving the use of carcinogens listed in WAC 296-62-07302.

(i) Mechanical pipetting aids must be used for all pipetting procedures.

(ii) Experiments, procedures and equipment which could produce aerosols must be confined to laboratory-type hoods or glove boxes.

(iii) Surfaces on which carcinogens are handled must be protected from contamination.

(iv) Contaminated wastes and animal carcasses must be collected in impervious containers which are closed and decontaminated prior to removal from the work area. Such wastes and carcasses must be incinerated in such a manner that no carcinogenic products are released.

(v) All other forms of listed carcinogens must be inactivated prior to disposal.

(vi) Laboratory vacuum systems must be protected with high efficiency scrubbers or with disposable absolute filters.

(vii) Employees engaged in animal support activities must be:

(A) Provided with, and required to wear, a complete protective clothing change, clean each day, including coveralls or pants and shirt, foot covers, head covers, gloves, and appropriate respiratory protective equipment or devices; and

(B) Prior to each exit from a regulated area, employees must remove and leave protective clothing and equipment at the point of exit and at the last exit of the day, to place used clothing and equipment in impervious containers at the point of exit for purposes of decontamination or disposal. The contents of such impervious containers must be identified as required under WAC 296-62-07310 (2) and (3).

(C) Required to wash hands, forearms, face and neck upon each exit from the regulated area close to the point of exit, and before engaging in other activities; and

(D) Required to shower after the last exit of the day.

(viii) Employees, other than those engaged only in animal support activities, each day must be:

(A) Provided with and required to wear a clean change of appropriate laboratory clothing, such as a solid front gown, surgical scrub suit, or fully buttoned laboratory coat.

(B) Prior to each exit from a regulated area, employees must remove and leave protective clothing and equipment at the point of exit and at the last exit of the day, to place used clothing and equipment in impervious containers at the point of exit for purposes of decontamination or disposal. The contents of such impervious containers shall be identified as required under WAC 296-62-07310 (2) and (3).

(C) Required to wash hands, forearms, face and neck upon each exit from the regulated area close to the point of exit, and before engaging in other activities.

(ix) Air pressure in laboratory areas and animal rooms where carcinogens are handled and bioassay studies are performed must be negative in relation to the pressure in surrounding areas. Exhaust air must not be discharged to regulated areas, nonregulated areas or the external environment unless decontaminated.

(x) There must not be any connection between regulated areas and any other areas through the ventilation system.

(xi) A current inventory of the carcinogens must be maintained.

(xii) Ventilated apparatus such as laboratory-type hoods, must be tested at least semiannually or immediately after ventilation modification or maintenance operations, by personnel fully qualified to certify correct containment and operation.

WAC 296-62-07308 General regulated area requirements.

(1) **Respirator program**. The employer must implement a respiratory protection program as required in chapter 296-62 WAC, Part E (except WAC 296-62-07130(1) and (5) and 296-62-07131), which covers each employee required by this chapter to use a respirator.

(2) **Emergencies**. In an emergency, immediate measures including, but not limited to, the requirements of (a), (b), (c), (d) and (e) of this subsection must be implemented.

(a) The potentially affected area must be evacuated as soon as the emergency has been determined.

(b) Hazardous conditions created by the emergency must be eliminated and the potentially affected area must be decontaminated prior to the resumption of normal operations.

(c) Special medical surveillance by a physician must be instituted within twenty-four hours for employees present in the potentially affected area at the time of the emergency. A report of the medical surveillance and any treatment must be included in the incident report, in accordance with WAC 296-62-07312(2).

(d) Where an employee has a known contact with a listed carcinogen, such employee must shower as soon as possible, unless contraindicated by physical injuries.

(e) An incident report on the emergency must be reported as provided in WAC 296-62-07312(2).

(3) **Hygiene facilities and practices**.

(a) Storage or consumption of food, storage or use of containers of beverages, storage or application of cosmetics, smoking, storage of smoking materials, tobacco products or other products for chewing, or the chewing of such products, are prohibited in regulated areas.

(b) Where employees are required by this section to wash, washing facilities must be provided in accordance with WAC 296-800-230.

(c) Where employees are required by this section to shower, shower facilities must be provided.

(i) One shower must be provided for each ten employees of each sex, or numerical fraction thereof, who are required to shower during the same shift.

(ii) Body soap or other appropriate cleansing agents convenient to the showers must be provided as specified in WAC 296-800-230, of the safety and health core rules.

(iii) Showers must be provided with hot and cold water feeding a common discharge line.

(iv) Employees who use showers must be provided with individual clean towels.

(d) Where employees wear protective clothing and equipment, clean change rooms must be provided and must be equipped with storage facilities for street clothes and separate storage facilities for the protective clothing for the number of such employees required to change clothes.

(e) Where toilets are in regulated areas, such toilets must be in a separate room.

(4) **Contamination control**.

(a) Regulated areas, except for outdoor systems, must be maintained under pressure negative with respect to nonregulated areas. Local exhaust ventilation may be used to satisfy this requirement. Clean makeup air in equal volume must replace air removed.

(b) Any equipment, material, or other item taken into or removed from a regulated area must be done so in a manner that does not cause contamination in nonregulated areas or the external environment.

(c) Decontamination procedures must be established and implemented to remove carcinogens from the surfaces of materials, equipment and the decontamination facility.

(d) Dry sweeping and dry mopping are prohibited.

WAC 296-62-07310 Signs, information and training.

(1) **Signs**.

(a) The employer must post signs at entrances to regulated areas. The signs must bear the legend:

DANGER
(CHEMICAL IDENTIFICATION)
MAY CAUSE CANCER
AUTHORIZED PERSONNEL ONLY

(b) The employer must post signs at entrances to regulated areas containing operations covered in WAC 296-62-07306 (2)(e). The signs must bear the legend:

DANGER
(CHEMICAL IDENTIFICATION)
MAY CAUSE CANCER
WEAR AIR-SUPPLIED HOODS, IMPERVIOUS SUITS, AND PROTECTIVE EQUIPMENT IN THIS AREA
AUTHORIZED PERSONNEL ONLY

(c) Appropriate signs and instructions must be posted at the entrance to, and exit from, regulated areas, informing employees of the procedures that must be followed in entering and leaving a regulated area.

(2) **Prohibited statements**. No statements shall appear on or near any required sign, label, or instruction that contradicts or detracts from the effect of any required warning, information or instruction.

(3) **Training and indoctrination**.

(a) Each employee prior to being authorized to enter a regulated area, must receive a training and indoctrination program including, but not necessarily limited to:

(i) The nature of the carcinogenic hazards of listed carcinogens, including local and systemic toxicity;

(ii) The specific nature of the operation involving carcinogens which could result in exposure;

(iii) The purpose for and application of the medical surveillance program, including, as appropriate, methods of self-examination;

(iv) The purpose for and application of decontamination practices and purposes;

(v) The purpose for and significance of emergency practices and procedures;

(vi) The employee's specific role in emergency procedures;

(vii) Specific information to aid the employee in recognition and evaluation of conditions and situations which may result in the release of listed carcinogens;

(viii) The purpose for and application of specific first-aid procedures and practices;

(ix) A review of this section at the employee's first training and indoctrination program and annually thereafter.

(b) Specific emergency procedures must be prescribed, and posted, and employees, must be familiarized with their terms, and rehearsed in their application.

(c) All materials relating to the program must be provided upon request to the director.

WAC 296-62-07312 Reports.

(1) **Operations**. Not later than October 30, 1974, the information required in (a), (b), (c) and (d) of this subsection must be reported in writing to the Department of Labor and Industries, WISHA Services Division, Policy and Technical Services, P.O. Box 44610, Olympia, WA 98504-4610. Any change in the information must also be reported in writing within 15 calendar days of the change.

(a) A brief description and in plant location of the area(s) regulated and the address of each regulated area;

(b) The name(s) and other identifying information as to the presence of listed carcinogens in each regulated area;

(c) The number of employees in each regulated area, during normal operations including maintenance activities; and

(d) The manner in which a carcinogen is present in each regulated area; e.g., whether it is manufactured, processed, used, repackaged, released, stored, or otherwise handled.

(2) **Incidents**. Incidents which result in the release of a listed carcinogen into any area where employees may be potentially exposed must be reported in accordance with this subsection.

(a) The occurrence of the incident, including any facts obtainable at that time, as well as a report on any medical treatment of affected employees, must be reported within 24 hours to the Department of Labor and Industries, WISHA Services Division, Policy and Technical Services, P.O. Box 44610, Olympia, WA 98504-4610.

(b) A written report must be filed with the Department of Labor and Industries, WISHA Services Division, Policy and Technical Services, P.O. Box 44610, Olympia, WA 98504-4610, within 15 calendar days after the incident occurs, and must include:

(i) A specification of the amount of material released, the amount of time involved, and an explanation of the procedure used in determining this figure;

(ii) A description of the area involved, and the extent of known and possible employee exposure and area contamination;

(iii) A report of any medical treatment of affected employees, and any medical surveillance program implemented; and

(iv) An analysis of the circumstances of the incident, and measures taken or to be taken, with specific completion dates, to avoid further similar releases.

Carcinogen Standard Report			
Company:_____ Plant Address:_____ Date:_____		Prepared by:_____ Title:_____	
Command and Other Identifying Information	Description of Inplant Location of Regulated Area*	Number of Employees In each Regulated area* Normally Maintenance	Manner** In Which Compound is Present in Each Regulated Area*

* See WAC 296-62-07304 for definition of "regulated area."

** Indicated whether manufactured, processed, used, repackaged, released, stored, or if otherwise handled (describe).

WAC 296-62-07314 Medical surveillance.

(1) At no cost to the employee, a program of medical surveillance must be established and implemented for employees considered for assignment to enter regulated areas, and for authorized employees.

(2) **Examinations.**

(a) Before an employee is assigned to enter a regulated area, a preassignment physical examination by a physician must be provided and must include a personal history of the employee and/or their family and occupational background, including genetic and environmental factors.

(i) Taking of employees' medical history and background history must be considered to be a routine part of standard medical practice.

(ii) This provision does not require "genetic testing" of any employee.

(iii) This provision does not require the exclusion of otherwise qualified employees from jobs on the basis of genetic factors.

(b) Authorized employees must be provided periodic physical examination, not less often than annually, following the preassignment examination.

(c) In all physical examinations, the examining physician must be requested to consider whether there exist conditions of increased risk, including reduced immunological competence, pregnancy, cigarette smoking, and those undergoing treatment with steroids or cytotoxic agents.

(3) **Records**.

(a) Employers of employees examined pursuant to this subdivision must maintain complete and accurate records of all such medical examinations. Records must be maintained for the duration of the employee's employment. The employer must ensure that medical records are maintained and made available in accordance with chapter 296-802 WAC, Employee medical and exposure records.

(b) Records required by this section must be provided upon request to employees, designated representatives, and the director in accordance with chapter 296-802 WAC.

(c) Any employer who requests a physical examination of an employee or prospective employee as required by this section must obtain from the physician a statement of the employee's suitability for employment in the specific exposure.

WAC 296-62-07316 Premixed solutions.

Where 4,4'-Methylene bis (2-chloroaniline) is present only in a single solution at a temperature not exceeding 220°F. the establishment of a regulated area is not required; however:

(1) Only authorized employees shall be permitted to handle such materials.

(2) Each day employees must be provided with and required to wear a clean change of protective clothing (smocks, coveralls, or long-sleeved shirts and pants), gloves and other protective garments and equipment necessary to prevent contact with the solution in the process used.

(3) Employees must remove and leave protective clothing and equipment when leaving the work area at the end of the work day, or at any time solution is spilled on such clothing or equipment. Used clothing and equipment must be placed in impervious containers for purposes of decontamination or disposal. The contents of such impervious containers must be identified, as required under WAC 296-62-07310 (2) and (3).

(4) Employees must wash hands and face after removing such clothing and equipment and before engaging in other activities.

(5) Employees assigned to work covered by this section must be deemed to be working in regulated areas for the purposes of WAC 296-62-07308 (1), (2)(a) and (b), and (3)(c) and (d), WAC 296-62-07310, 296-62-07312 and 296-62-07314.

(6) Work areas where solution may be spilled must be:

(a) Covered daily or after any spill with a clean covering; or

(b) Clean thoroughly, daily and after any spill.

Part G
Carcinogens (Specific)

WAC		Page
WAC 296-62-07329	Vinyl chloride.	1
WAC 296-62-07336	Acrylonitrile.	8
WAC 296-62-07337	Appendix A--Substance safety data sheet for acrylonitrile.	21
WAC 296-62-07338	Appendix B--Substance technical guidelines for acrylonitrile.	25
WAC 296-62-07339	Appendix C--Medical surveillance guidelines for acrylonitrile.	30
WAC 296-62-07340	Appendix D--Sampling and analytical methods for acrylonitrile.	32
WAC 296-62-07342	1,2-Dibromo-3-chloropropane.	43
WAC 296-62-07343	Appendix A--Substance safety data sheet for DBCP.	54
WAC 296-62-07344	Appendix B--Substance technical guidelines for DBCP.	57
WAC 296-62-07346	Appendix C--Medical surveillance guidelines for DBCP.	61
WAC 296-62-07355	Ethylene oxide. Scope and application.	64
WAC 296-62-07357	Definitions.	64
WAC 296-62-07359	Permissible exposure limits (PEL).	65
WAC 296-62-07361	Exposure monitoring.	65
WAC 296-62-07363	Regulated areas.	67
WAC 296-62-07365	Methods of compliance.	67
WAC 296-62-07367	Respiratory protection and personal protective equipment.	68
WAC 296-62-07369	Emergency situations.	69
WAC 296-62-07371	Medical surveillance.	70
WAC 296-62-07373	Communication of EtO hazards.	72
WAC 296-62-07375	Recordkeeping.	73
WAC 296-62-07377	Observation of monitoring.	75

WAC.....Page

WAC 296-62-07381 Appendices. 75

WAC 296-62-07383 Appendix A--Substance safety data sheet for ethylene oxide (nonmandatory). 75

WAC 296-62-07385 Appendix B--Substance technical guide for ethylene oxide (nonmandatory). 82

WAC 296-62-07387 Appendix C--Medical surveillance guidelines for ethylene oxide (nonmandatory). 85

WAC 296-62-07389 Appendix D--Sampling and analytical methods for ethylene oxide (nonmandatory). 88

WAC 296-62-074 Cadmium 103

WAC 296-62-07401 Scope. 103

WAC 296-62-07403 Definitions. 103

WAC 296-62-07405 Permissible exposure limit (PEL). 104

WAC 296-62-07407 Exposure monitoring. 104

WAC 296-62-07409 Regulated areas. 105

WAC 296-62-07411 Methods of compliance. 106

WAC 296-62-07413 Respirator protection. 108

WAC 296-62-07415 Emergency situations. 109

WAC 296-62-07417 Protective work clothing and equipment. 109

WAC 296-62-07419 Hygiene areas and practices. 111

WAC 296-62-07421 Housekeeping. 111

WAC 296-62-07423 Medical surveillance. 112

WAC 296-62-07425 Communication of cadmium hazards. 123

WAC 296-62-07427 Recordkeeping. 125

WAC 296-62-07429 Observation of monitoring. 126

WAC 296-62-07433 Appendices. 127

WAC 296-62-07441 Appendix A--substance safety data sheet--Cadmium. 127

WAC 296-62-07443 Appendix B--Substance technical guidelines for cadmium. 141

WAC.....Page

WAC 296-62-07447 Appendix D--Occupational health history interview with reference to cadmium exposure directions. 146

WAC 296-62-07449 Appendix E--Cadmium in workplace atmospheres. 150

WAC 296-62-07451 A short description of Appendix F to 29 CFR 1910.1027--Nonmandatory protocol for biological monitoring. 175

WAC 296-62-07460 1,3-Butadiene. 176

Appendix A. Substance Safety Data Sheet For 1,3-Butadiene (Non-Mandatory) 191

Appendix B. Substance Technical Guidelines for 1,3-Butadiene (Non-Mandatory) 195

Appendix C. Medical Screening and Surveillance for 1,3-Butadiene (Non-Mandatory) 199

Appendix D: Sampling and Analytical Method for 1,3-Butadiene (Non-Mandatory) 202

APPENDIX E: Reserved. 210

APPENDIX F, MEDICAL QUESTIONNAIRES, (Non-mandatory) 210

1,3-Butadiene (BD) Health Update Questionnaire 214

WAC 296-62-07470 Methylene chloride. 217

WAC 296-62-07473 Appendix A. Substance Safety Data Sheet and Technical Guidelines for Methylene Chloride 235

WAC 296-62-07475 Appendix B. Medical Surveillance for Methylene Chloride 241

WAC 296-62-07477 Appendix C. Questions and answers--methylene chloride in furniture stripping. 250

WAC 296-62-07329 Vinyl chloride.

(1) **Scope and application**.

(a) This section includes requirements for the control of employee exposure to vinyl chloride (chloroethene), Chemical Abstracts Service Registry No. 75014.

(b) This section applies to the manufacture, reaction, packaging, repackaging, storage, handling or use of vinyl chloride or polyvinyl chloride, but does not apply to the handling or use of fabricated products made of polyvinyl chloride.

(c) This section applies to the transportation of vinyl chloride or polyvinyl chloride except to the extent that the department of transportation may regulate the hazards covered by this section.

(2) **Definitions**.

(a) **Action level**. A concentration of vinyl chloride of 0.5 ppm averaged over an 8-hour work day.

(b) **Authorized person**. Any person specifically authorized by the employer whose duties require them to enter a regulated area or any person entering such an area as a designated representative of employees for the purpose of exercising an opportunity to observe monitoring and measuring procedures.

(c) **Director**. The director of department of labor and industries or their designated representative.

(d) **Emergency**. Any occurrence such as, but not limited to, equipment failure, or operation of a relief device which is likely to, or does, result in massive release of vinyl chloride.

(e) **Fabricated product**. A product made wholly or partly from polyvinyl chloride, and which does not require further processing at temperatures, and for times, sufficient to cause mass melting of the polyvinyl chloride resulting in the release of vinyl chloride.

(f) **Hazardous operation**. Any operation, procedure, or activity where a release of either vinyl chloride liquid or gas might be expected as a consequence of the operation or because of an accident in the operation, which would result in an employee exposure in excess of the permissible exposure limit.

(g) **Polyvinyl chloride**. Polyvinyl chloride homopolymer or copolymer before such is converted to a fabricated product.

(h) **Vinyl chloride**. Vinyl chloride monomer.

(3) **Permissible exposure limit**.

(a) No employee may be exposed to vinyl chloride at concentrations greater than 1 ppm averaged over any 8-hour period, and

(b) No employee may be exposed to vinyl chloride at concentrations greater than 5 ppm averaged over any period not exceeding 15 minutes.

(c) No employee may be exposed to vinyl chloride by direct contact with liquid vinyl chloride.

(4) **Monitoring**.

(a) A program of initial monitoring and measurement must be undertaken in each establishment to determine if there is any employee exposed, without regard to the use of respirators, in excess of the action level.

(b) Where a determination conducted under subdivision (a) of this subsection shows any employee exposures without regard to the use of respirators, in excess of the action level, a program for determining exposures for each such employee must be established. Such a program:

(i) Must be repeated at least monthly where any employee is exposed, without regard to the use of respirators, in excess of the permissible exposure limit.

(ii) Must be repeated not less than quarterly where any employee is exposed, without regard to the use of respirators, in excess of the action level.

(iii) May be discontinued for any employee only when at least two consecutive monitoring determinations, made not less than 5 working days apart, show exposures for that employee at or below the action level.

(c) Whenever there has been a production, process or control change which may result in an increase in the release of vinyl chloride, or the employer has any other reason to suspect that any employee may be exposed in excess of the action level, a determination of employee exposure under subdivision (a) of this subsection must be performed.

(d) The method of monitoring and measurement must have an accuracy (with a confidence level of 95 percent) of not less than plus or minus 50 percent from 0.25 through 0.5 ppm, plus or minus 35 percent from over 0.5 ppm through 1.0 ppm, plus or minus 25 percent over 1.0 ppm, (methods meeting these accuracy requirements are available from the director).

(e) Employees or their designated representatives must be afforded reasonable opportunity to observe the monitoring and measuring required by this subsection.

(5) **Regulated area**.

(a) A regulated area must be established where:

(i) Vinyl chloride or polyvinyl chloride is manufactured, reacted, repackaged, stored, handled or used; and

(ii) Vinyl chloride concentrations are in excess of the permissible exposure limit.

(b) Access to regulated areas must be limited to authorized persons.

(6) **Methods of compliance**. Employee exposures to vinyl chloride must be controlled to at or below the permissible exposure limit provided in subsection (3) of this section by engineering, work-practice, and personal protective controls as follows:

(a) Feasible engineering and work-practice controls must immediately be used to reduce exposures to at or below the permissible exposure limit.

(b) Wherever feasible engineering and work-practice controls which can be instituted immediately are not sufficient to reduce exposures to at or below the permissible exposure limit, they must nonetheless be used to reduce exposures to the lowest practicable level, and must be supplemented by respiratory protection in accordance with subsection (7) of this section. A program must be established and implemented to reduce exposures to at or below the permissible exposure limit, or to the greatest extent feasible, solely by means of engineering and work-practice controls, as soon as feasible.

(c) Written plans for such a program must be developed and furnished upon request for examination and copying to the director. Such plans must be updated at least every six months.

(7) **Respiratory protection**.

(a) General. For employees who use respirators required by this section, the employer must provide each employee an appropriate respirator that complies with the requirements of this section.

(b) Respirator program. The employer must develop, implement, and maintain a respiratory protection program as required in chapter 296-842 WAC, Respirators, which covers each employee required by this chapter to use a respirator. EXCEPTION: The requirements in WAC 296-842 13005 that address change out of vapor or gas respirator cartridges or canisters.

(c) Respirator selection. The employer must:

(i) Select and provide to employees appropriate respirators as specified in this section and WAC 296-842-13005 in the respirator rule.

(ii) Provide organic vapor cartridges that have a service life of at least one hour when employees use air-purifying respirators in vinyl chloride concentrations up to 10 parts per million (ppm).

(iii) Make sure the following respirators, when selected, are equipped with a canister with a service life of at least 4 hours when used in vinyl chloride concentrations up to 25 ppm:

(A) Helmet, hood, or full-facepiece PAPRs or

(B) Gas masks with a front-or back-mounted canister.

(d) Where air-purifying respirators are used:

(i) Air-purifying canisters or cartridges must be replaced prior to the expiration of their service life or the end of the shift in which they are first used, whichever occurs first, and

(ii) A continuous monitoring and alarm system must be provided when concentrations of vinyl chloride could reasonably exceed the allowable concentrations for the devices in use. Such system must be used to alert employees when vinyl chloride concentrations exceed the allowable concentrations for the devices in use, and

(iii) Respirators specified for higher concentrations may be used for lower concentration.

(8) **Hazardous operations**.

(a) Employees engaged in hazardous operations, including entry of vessels to clean polyvinyl chloride residue from vessel walls, must be provided and required to wear and use:

(i) Respiratory protection in accordance with subsections (3) and (7) of this section; and

(ii) Protective garments to prevent skin contact with liquid vinyl chloride or with polyvinyl chloride residue from vessel walls. The protective garments must be selected for the operation and its possible exposure conditions.

(b) Protective garments must be provided clean and dry for each use.

(c) Emergency situations. A written operational plan for emergency situations must be developed for each facility storing, handling, or otherwise using vinyl chloride as a liquid or compressed gas. Appropriate portions of the plan must be implemented in the event of an emergency. The plan must specifically provide that:

(i) Employees engaged in hazardous operations or correcting situations of existing hazardous releases must be equipped as required in (a) and (b) of this subsection;

(ii) Other employees not so equipped must evacuate the area and not return until conditions are controlled by the methods required in subsection (6) of this section and the emergency is abated.

(9) **Training**. Each employee engaged in vinyl chloride or polyvinyl chloride operations must be provided training in a program relating to the hazards of vinyl chloride and precautions for its safe use.

(a) The program must include:

(i) The nature of the health hazard from chronic exposure to vinyl chloride including specifically the carcinogenic hazard;

(ii) The specific nature of operations which could result in exposure to vinyl chloride in excess of the permissible limit and necessary protective steps;

(iii) The purpose for, proper use, and limitations of respiratory protective devices;

(iv) The fire hazard and acute toxicity of vinyl chloride, and the necessary protective steps;

(v) The purpose for and a description of the monitoring program;

(vi) The purpose for and a description of, the medical surveillance program;

(vii) Emergency procedures:

(A) Specific information to aid the employee in recognition of conditions which may result in the release of vinyl chloride; and

(B) A review of this standard at the employee's first training and indoctrination program, and annually thereafter.

(b) All materials relating to the program must be provided upon request to the director.

(10) **Medical surveillance**. A program of medical surveillance must be instituted for each employee exposed, without regard to the use of respirators, to vinyl chloride in excess of the action level. The program must provide each such employee with an opportunity for examinations and tests in accordance with this subsection. All medical examinations and procedures must be performed by or under the supervision of a licensed physician and must be provided without cost to the employee.

(a) At the time of initial assignment, or upon institution of medical surveillance;

(i) A general physical examination must be performed with specific attention to detecting enlargement of liver, spleen or kidneys, or dysfunction in these organs, and for abnormalities in skin, connective tissues and the pulmonary system (see Appendix A).

(ii) A medical history must be taken, including the following topics:

(A) Alcohol intake,

(B) Past history of hepatitis,

(C) Work history and past exposure to potential hepatotoxic agents, including drugs and chemicals,

(D) Past history of blood transfusions, and

(E) Past history of hospitalizations.

(iii) A serum specimen must be obtained and determinations made of:

(A) Total bilirubin,

(B) Alkaline phosphatase,

(C) Serum glutamic oxalacetic transaminase (SGOT),

(D) Serum glutamic pyruvic transaminase (SGPT), and

(E) Gamma glustamyl transpeptidase.

(b) Examinations provided in accordance with this subdivision must be performed at least:

(i) Every 6 months for each employee who has been employed in vinyl chloride or polyvinyl chloride manufacturing for 10 years or longer; and

(ii) Annually for all other employees.

(c) Each employee exposed to an emergency must be afforded appropriate medical surveillance.

(d) A statement of each employee's suitability for continued exposure to vinyl chloride including use of protective equipment and respirators, must be obtained from the examining physician promptly after any examination. A copy of the physician's statement must be provided each employee.

(e) If any employee's health would be materially impaired by continued exposure, such employee must be withdrawn from possible contact with vinyl chloride.

(f) Laboratory analyses for all biological specimens included in medical examinations must be performed in laboratories licensed under 42 CFR Part 74.

(g) If the examining physician determines that alternative medical examinations to those required by (a) of this subsection will provide at least equal assurance of detecting medical conditions pertinent to the exposure to vinyl chloride, the employer may accept such alternative examinations as meeting the requirements of (a) of this subsection, if the employer obtains a statement from the examining physician setting forth the alternative examinations and the rationale for substitution. This statement must be available upon request for examination and copying to authorized representatives of the director.

(11) **Communication of hazards**.

(a) Hazard communication-General.

(b) Chemical manufacturers, importers, distributors and employers must comply with all requirements of the Hazard Communication Standard (HCS), WAC 296-901-140 for vinyl chloride and polyvinyl chloride.

(c) In classifying the hazards of vinyl chloride at least the following hazards are to be addressed: Cancer; central nervous system effects; liver effects; blood effects; and flammability.

(d) Employers must include vinyl chloride in the hazard communication program established to comply with the HCS, WAC 296-901-140. Employers must ensure that each employee has access to labels on containers of vinyl chloride and to safety data sheets, and is trained in accordance with the requirements of HCS and subsection (9) of this section.

(12) **Signs**.

(a) The employers must post entrances to regulated areas with legible signs bearing the legend:

DANGER
VINYL CHLORIDE
MAY CAUSE CANCER
AUTHORIZED PERSONNEL ONLY

(b) The employer must post signs at areas containing hazardous operations or where emergencies currently exist. The signs must be legible and bear the legend:

DANGER
VINYL CHLORIDE
MAY CAUSE CANCER
WEAR RESPIRATORY PROTECTION AND PROTECTIVE CLOTHING IN THIS AREA
AUTHORIZED PERSONNEL ONLY

(13) **Labels**.

(a) In addition to the other requirements in this section, the employer must ensure that labels for containers of polyvinyl chloride resin waste from reactors or other waste contaminated with vinyl chloride are legible and include the following information:

CONTAMINATED WITH VINYL CHLORIDE
MAY CAUSE CANCER

(b) No statement shall appear on or near any required sign, label, or instruction which contradicts or detracts from the effect of any required warning, information, or instruction.

(14) **Records**.

(a) All records maintained in accordance with this section must include the name and social security number of each employee where relevant.

(b) Records of required monitoring and measuring and medical records must be provided upon request to employees, designated representatives, and the director in accordance with chapter 296-802 WAC. These records must be provided upon request to the director. Authorized personnel rosters must also be provided upon request to the director.

(i) Monitoring and measuring records must:

(A) State the date of such monitoring and measuring and the concentrations determined and identify the instruments and methods used;

(B) Include any additional information necessary to determine individual employee exposures where such exposures are determined by means other than individual monitoring of employees; and

(C) Be maintained for not less than 30 years.

(ii) Medical records must be maintained for the duration of the employment of each employee plus 20 years, or 30 years, whichever is longer.

(c) The employer must comply with any additional requirements set forth in chapter 296-802 WAC.

(d) Employees or their designated representatives must be provided access to examine and copy records of required monitoring and measuring.

(e) Former employees must be provided access to examine and copy required monitoring and measuring records reflecting their own exposures.

(f) Upon written request of any employee, a copy of the medical record of that employee must be furnished to any physician designated by the employee.

(15) **Reports**.

(a) Not later than 1 month after the establishment of a regulated area, the following information must be reported to the director. Any changes to such information must be reported within 15 days.

(i) The address and location of each establishment which has one or more regulated areas; and

(ii) The number of employees in each regulated area during normal operations, including maintenance.

(b) Emergencies and the facts obtainable at that time, must be reported within 24 hours to the director. Upon request of the director, the employer must submit additional information in writing relevant to the nature and extent of employee exposures and measures taken to prevent future emergencies of similar nature.

(c) Within 10 working days following any monitoring and measuring which discloses that any employee has been exposed, without regard to the use of respirators, in excess of the permissible exposure limit, each such employee must be notified in writing of the results of the exposure measurement and the steps being taken to reduce the exposure to within the permissible exposure limit.

(16) **Appendix A supplementary medical information**.

When required tests under subsection (10)(a) of this section show abnormalities, the tests should be repeated as soon as practicable, preferably within 3 to 4 weeks. If tests remain abnormal, consideration should be given to withdrawal of the employee from contact with vinyl chloride, while a more comprehensive examination is made.

Additional tests which may be useful:

(a) For kidney dysfunction: Urine examination for albumin, red blood cells, and exfoliative abnormal cells.

(b) Pulmonary system: Forced vital capacity, forced expiratory volume at 1 second, and chest roentgenogram (posterior-anterior, 14 x 17 inches).

(c) Additional serum tests: Lactic acid dehydrogenase, lactic acid dehydrogenase isoenzyme, protein determination, and protein electrophoresis.

(d) For a more comprehensive examination on repeated abnormal serum tests: Hepatitis B antigen, and liver scanning.

WAC 296-62-07336 Acrylonitrile.

(1) **Scope and application**.

(a) This section applies to all occupational exposure to acrylonitrile (AN), Chemical Abstracts Service Registry No. 000107131, except as provided in (b) and (c) of this subsection.

(b) This section does not apply to exposures which result solely from the processing, use, and handling of the following materials:

(i) ABS resins, SAN resins, nitrile barrier resins, solid nitrile elastomers, and acrylic and modacrylic fibers, when these listed materials are in the form of finished polymers, and products fabricated from such finished polymers;

(ii) Materials made from and/or containing AN for which objective data is reasonably relied upon to demonstrate that the material is not capable of releasing AN in airborne concentrations in excess of 1 ppm as an eight-hour time-weighted average, under the expected conditions of processing, use, and handling which will cause the greatest possible release; and

(iii) Solid materials made from and/or containing AN which will not be heated above 170°F during handling, use, or processing.

(c) An employer relying upon exemption under (1)(b)(ii) must maintain records of the objective data supporting that exemption, and of the basis of the employer's reliance on the data as provided in subsection (17) of this section.

(2) **Definitions, as applicable to this section**:

(a) **Acrylonitrile or AN**. Acrylonitrile monomer, chemical formula CH2 = CHCN.

(b) **Action level**. A concentration of AN of 1 ppm as an eight-hour time-weighted average.

(c) **Authorized person**. Any person specifically authorized by the employer whose duties require the person to enter a regulated area, or any person entering such an area as a designated representative of employees for the purpose of exercising the opportunity to observe monitoring procedures under subsection (18) of this section.

(d) **Decontamination**. Treatment of materials and surfaces by water washdown, ventilation, or other means, to ensure that the materials will not expose employees to airborne concentrations of AN above 1 ppm as an eight-hour time-weighted average.

(e) **Director**. The director of labor and industries, or their authorized representative.

(f) **Emergency**. Any occurrence such as, but not limited to, equipment failure, rupture of containers, or failure of control equipment, which is likely to, or does, result in unexpected exposure to AN in excess of the ceiling limit.

(g) **Liquid AN**. AN monomer in liquid form, and liquid or semiliquid polymer intermediates, including slurries, suspensions, emulsions, and solutions, produced during the polymerization of AN.

(h) **Polyacrylonitrile or PAN**. Polyacrylonitrile homopolymers or copolymers, except for materials as exempted under subsection (1)(b) of this section.

(3) **Permissible exposure limits**.

(a) Inhalation.

(i) Time-weighted average limit (TWA). The employer must ensure that no employee is exposed to an airborne concentration of acrylonitrile in excess of two parts acrylonitrile per million parts of air (2 ppm), as an eight-hour time-weighted average.

(ii) Ceiling limit. The employer must ensure that no employee is exposed to an airborne concentration of acrylonitrile in excess of 10 ppm as averaged over any fifteen-minute period during the working day.

(b) Dermal and eye exposure. The employer must ensure that no employee is exposed to skin contact or eye contact with liquid AN or PAN.

(4) **Notification of use and emergencies**.

(a) Use. Within ten days of the effective date of this standard, or within fifteen days following the introduction of AN into the workplace, every employer must report, unless he has done so pursuant to the emergency temporary standard, the following information to the director for each such workplace:

(i) The address and location of each workplace in which AN is present;

(ii) A brief description of each process of operation which may result in employee exposure to AN;

(iii) The number of employees engaged in each process or operation who may be exposed to AN and an estimate of the frequency and degree of exposure that occurs; and

(iv) A brief description of the employer's safety and health program as it relates to limitation of employee exposure to AN. Whenever there has been a significant change in the information required by this subsection, the employer must promptly amend such information previously provided to the director.

(b) Emergencies and remedial action. Emergencies, and the facts obtainable at that time, must be reported within 24 hours of the initial occurrence to the director. Upon request of the director, the employer must submit additional information in writing relevant to the nature and extent of employee exposures and measures taken to prevent future emergencies of a similar nature.

(5) **Exposure monitoring**.

(a) General.

(i) Determinations of airborne exposure levels must be made from air samples that are representative of each employee's exposure to AN over an eight-hour period.

(ii) For the purposes of this section, employee exposure is that which would occur if the employee were not using a respirator.

(b) Initial monitoring. Each employer who has a place of employment in which AN is present must monitor each such workplace and work operation to accurately determine the airborne concentrations of AN to which employees may be exposed. Such monitoring may be done on a representative basis, provided that the employer can demonstrate that the determinations are representative of employee exposures.

(c) Frequency.

(i) If the monitoring required by this section reveals employee exposure to be below the action level, the employer may discontinue monitoring for that employee. The employer must continue these quarterly measurements until at least two consecutive measurements taken at least seven days apart, are below the action level, and thereafter the employer may discontinue monitoring for that employee.

(ii) If the monitoring required by this section reveals employee exposure to be at or above the action level but below the permissible exposure limits, the employer must repeat such monitoring for each such employee at least quarterly.

(iii) If the monitoring required by this section reveals employee exposure to be in excess of the permissible exposure limits, the employer must repeat these determinations for each such employee at least monthly. The employer must continue these monthly measurements until at least two consecutive measurements, taken at least seven days apart, are below the permissible exposure limits, and thereafter the employer must monitor at least quarterly.

(d) Additional monitoring. Whenever there has been a production, process, control or personnel change which may result in new or additional exposure to AN, or whenever the employer has any other reason to suspect a change which may result in new or additional exposures to AN, additional monitoring which complies with this subsection must be conducted.

(e) Employee notification.

(i) Within five working days after the receipt of monitoring results, the employer must notify each employee in writing of the results which represent that employee's exposure.

(ii) Whenever the results indicate that the representative employee exposure exceeds the permissible exposure limits, the employer must include in the written notice a statement that the permissible exposure limits were exceeded and a description of the corrective action being taken to reduce exposure to or below the permissible exposure limits.

(f) Accuracy of measurement. The method of measurement of employee exposures must be accurate, to a confidence level of 95 percent, to within plus or minus 25 percent for concentrations of AN at or above the permissible exposure limits, and plus or minus 35 percent for concentrations of AN between the action level and the permissible exposure limits.

(g) Weekly survey of operations involving liquid AN. In addition to monitoring of employee exposures to AN as otherwise required by this subsection, the employer must survey areas of operations involving liquid AN at least weekly to detect points where AN liquid or vapor are being released into the workplace. The survey must employ an infra-red gas analyzer calibrated for AN, a multipoint gas chromatographic monitor, or comparable system for detection of AN. A listing of levels detected and areas of AN release, as determined from the survey, must be posted prominently in the workplace, and must remain posted until the next survey is completed.

(6) **Regulated areas**.

(a) The employer must establish regulated areas where AN concentrations are in excess of the permissible exposure limits.

(b) Regulated areas must be demarcated and segregated from the rest of the workplace, in any manner that minimizes the number of persons who will be exposed to AN.

(c) Access to regulated areas must be limited to authorized persons or to persons otherwise authorized by the act or regulations issued pursuant thereto.

(d) The employer must ensure that in the regulated area, food or beverages are not present or consumed, smoking products are not present or used, and cosmetics are not applied, (except that these activities may be conducted in the lunchrooms, change rooms and showers required under subsection (13)(a) through (c) of this section.

(7) **Methods of compliance**.

(a) Engineering and work-practice controls.

(i) The employer must institute engineering or work-practice controls to reduce and maintain employee exposures to AN, to or below the permissible exposure limits, except to the extent that the employer establishes that such controls are not feasible.

(ii) Wherever the engineering and work-practice controls which can be instituted are not sufficient to reduce employee exposures to or below the permissible exposure limits, the employer must nonetheless use them to reduce exposures to the lowest levels achievable by these controls and must supplement them by the use of respiratory protection which complies with the requirements of subsection (8) of this section.

(b) Compliance program.

(i) The employer must establish and implement a written program to reduce employee exposures to or below the permissible exposure limits solely by means of engineering and work-practice controls, as required by subsection (7)(a) of this section.

(ii) Written plans for these compliance programs must include at least the following:

(A) A description of each operation or process resulting in employee exposure to AN above the permissible exposure limits;

(B) Engineering plans and other studies used to determine the controls for each process;

(C) A report of the technology considered in meeting the permissible exposure limits;

(D) A detailed schedule for the implementation of engineering or work-practice controls; and

(E) Other relevant information.

(iii) The employer must complete the steps set forth in the compliance program by the dates in the schedule.

(iv) Written plans for such a program must be submitted upon request to the director, and must be available at the worksite for examination and copying by the director, or any affected employee or representative.

(v) The plans required by this subsection must be revised and updated at least every six months to reflect the current status of the program.

(8) **Respiratory protection**.

(a) General. For employees who use respirators required by this section, the employer must provide each employee an appropriate respirator that complies with the requirements of this subsection. Respirators must be used during:

(i) Periods necessary to install or implement feasible engineering and work-practice controls;

(ii) Work operations, such as maintenance and repair activities or reactor cleaning, for which the employer establishes that engineering and work-practice controls are not feasible;

(iii) Work operations for which feasible engineering and work-practice controls are not yet sufficient to reduce employee exposure to or below the permissible exposure limits;

(iv) Emergencies.

(b) Respirator program. Employers must develop, implement and maintain a respiratory protection program in accordance with chapter 296-842 WAC, Respirators, which covers each employee required by this chapter to use a respirator.

(c) Respirator selection. The employer must:

(i) Select and provide to employees appropriate respirators by following the requirements in this section and WAC 296-842-13005 in the respirator rule.

(ii) Provide to employees, for escape, any organic vapor, air-purifying respirator or any self-contained breathing apparatus (SCBA) that meets the selection requirements of WAC 296-842-13005 in the respirator rule.

(9) **Emergency situations**.

(a) Written plans.

(i) A written plan for emergency situations must be developed for each workplace where AN is present. Appropriate portions of the plan must be implemented in the event of an emergency.

(ii) The plan must specifically provide that employees engaged in correcting emergency conditions must be equipped as required in subsection (8) of this section until the emergency is abated.

(b) Alerting employees.

(i) Where there is the possibility of employee exposure to AN in excess of the ceiling limit due to the occurrence of an emergency, a general alarm must be installed and maintained to promptly alert employees of such occurrences.

(ii) Employees not engaged in correcting the emergency must be evacuated from the area and must not be permitted to return until the emergency is abated.

(10) **Protective clothing and equipment**.

(a) Provision and use. Where eye or skin contact with liquid AN or PAN may occur, the employer must provide at no cost to the employee, and ensure that employees wear, appropriate protective clothing or other equipment in accordance with WAC 296-800-160 to protect any area of the body which may come in contact with liquid AN or PAN.

(b) Cleaning and replacement.

(i) The employer must clean, launder, maintain, or replace protective clothing and equipment required by this subsection, as needed to maintain their effectiveness. In addition, the employer must provide clean protective clothing and equipment at least weekly to each affected employee.

(ii) The employer must ensure that impermeable protective clothing which contacts or is likely to have contacted liquid AN must be decontaminated before being removed by the employee.

(iii) The employer must ensure that AN- or PAN-contaminated protective clothing and equipment is placed and stored in closable containers which prevent dispersion of the AN or PAN outside the container.

(iv) The employer must ensure that an employee whose nonimpermeable clothing becomes wetted with liquid AN must immediately remove that clothing and proceed to shower. The clothing must be decontaminated before it is removed from the regulated area.

(v) The employer must ensure that no employee removes AN- or PAN-contaminated protective equipment or clothing from the change room, except for those employees authorized to do so for the purpose of laundering, maintenance, or disposal.

(vi) The employer must inform any person who launders or cleans AN-or PAN-contaminated protective clothing or equipment of the potentially harmful effects of exposure to AN.

(vii) The employer must ensure that containers of contaminated protective clothing and equipment which are to be removed from the workplace for any reason are labeled in accordance with subsection (16)(c)(ii) of this section, and that such labels remain affixed when such containers leave the employer's workplace.

(11) **Housekeeping**.

(a) All surfaces must be maintained free of accumulations of liquid AN and of PAN.

(b) For operations involving liquid AN, the employer must institute a program for detecting leaks and spills of liquid AN, including regular visual inspections.

(c) Where spills of liquid AN are detected, the employer must ensure that surfaces contacted by the liquid AN are decontaminated. Employees not engaged in decontamination activities must leave the area of the spill, and shall not be permitted in the area until decontamination is completed.

(d) Liquids. Where AN is present in a liquid form, or as a resultant vapor, all containers or vessels containing AN must be enclosed to the maximum extent feasible and tightly covered when not in use, with adequate provision made to avoid any resulting potential explosion hazard.

(e) Surfaces.

(i) Dry sweeping and the use of compressed air for the cleaning of floors and other surfaces where AN and PAN are found is prohibited.

(ii) Where vacuuming methods are selected, either portable units or a permanent system may be used.

(A) If a portable unit is selected, the exhaust must be attached to the general workplace exhaust ventilation system or collected within the vacuum unit, equipped with high efficiency filters or other appropriate means of contaminant removal, so that AN is not reintroduced into the workplace air; and

(B) Portable vacuum units used to collect AN may not be used for other cleaning purposes and must be labeled as prescribed by subsection (16)(c)(ii) of this section.

(iii) Cleaning of floors and other contaminated surfaces may not be performed by washing down with a hose, unless a fine spray has first been laid down.

(12) **Waste disposal**. AN and PAN waste, scrap, debris, bags, containers or equipment, must be disposed of in sealed bags or other closed containers which prevent dispersion of AN outside the container, and labeled as prescribed in subsection (16)(c)(ii) of this section.

(13) **Hygiene facilities and practices**. Where employees are exposed to airborne concentrations of AN above the permissible exposure limits, or where employees are required to wear protective clothing or equipment pursuant to subsection (11) of this section, or where otherwise found to be appropriate, the facilities required by WAC 296-800-230 must be provided by the employer for the use of those employees, and the employer must ensure that the employees use the facilities provided. In addition, the following facilities or requirements are mandated.

(a) Change rooms. The employer must provide clean change rooms in accordance with WAC 296-800-230.

(b) Showers.

(i) The employer must provide shower facilities in accordance with WAC 296-800-230.

(ii) In addition, the employer must also ensure that employees exposed to liquid AN and PAN shower at the end of the work shift.

(iii) The employer must ensure that, in the event of skin or eye exposure to liquid AN, the affected employee must shower immediately to minimize the danger of skin absorption.

(c) Lunchrooms.

(i) Whenever food or beverages are consumed in the workplace, the employer must provide lunchroom facilities which have a temperature controlled, positive pressure, filtered air supply, and which are readily accessible to employees exposed to AN above the permissible exposure limits.

(ii) In addition, the employer must also ensure that employees exposed to AN above the permissible exposure limits wash their hands and face prior to eating.

(14) **Medical surveillance**.

(a) General.

(i) The employer must institute a program of medical surveillance for each employee who is or will be exposed to AN above the action level. The employer must provide each such employee with an opportunity for medical examinations and tests in accordance with this subsection.

(ii) The employer must ensure that all medical examinations and procedures are performed by or under the supervision of a licensed physician, and must be provided without cost to the employee.

(b) Initial examinations. At the time of initial assignment, or upon institution of the medical surveillance program, the employer must provide each affected employee an opportunity for a medical examination, including at least the following elements:

(i) A work history and medical history with special attention to skin, respiratory, and gastrointestinal systems, and those non-specific symptoms, such as headache, nausea, vomiting, dizziness, weakness, or other central nervous system dysfunctions that may be associated with acute or chronic exposure to AN.

(ii) A physical examination giving particular attention to central nervous system, gastrointestinal system, respiratory system, skin and thyroid.

(iii) A “14 x 17” posteroanterior chest x-ray.

(iv) Further tests of the intestinal tract, including fecal occult blood screening, and proctosigmoidoscopy, for all workers 40 years of age or older, and for any other affected employees for whom, in the opinion of the physician, such testing is appropriate.

(c) Periodic examinations.

(i) The employer must provide examinations specified in this subsection at least annually for all employees specified in subsection (14)(a) of this section.

(ii) If an employee has not had the examinations prescribed in subsection (14)(b) of this section within six months of termination of employment, the employer must make such examination available to the employee upon such termination.

(d) Additional examinations. If the employee for any reason develops signs or symptoms commonly associated with exposure to AN, the employer must provide appropriate examination and emergency medical treatment.

(e) Information provided to the physician. The employer must provide the following information to the examining physician:

(i) A copy of this standard and its appendices;

(ii) A description of the affected employee's duties as they relate to the employee's exposure;

(iii) The employee's representative exposure level;

(iv) The employee's anticipated or estimated exposure level (for preplacement examinations or in cases of exposure due to an emergency);

(v) A description of any personal protective equipment used or to be used; and

(vi) Information from previous medical examinations of the affected employee, which is not otherwise available to the examining physician.

(f) Physician's written opinion.

(i) The employer must obtain a written opinion from the examining physician which must include:

(A) The results of the medical examination and test performed;

(B) The physician's opinion as to whether the employee has any detected medical condition which would place the employee at an increased risk of material impairment of the employee's health from exposure to AN;

(C) Any recommended limitations upon the employee's exposure to AN or upon the use of protective clothing and equipment such as respirators; and

(D) A statement that the employee has been informed by the physician of the results of the medical examination and any medical conditions which require further examination or treatment.

(ii) The employer must instruct the physician not to reveal in the written opinion specific findings or diagnoses unrelated to occupational exposure to AN.

(iii) The employer must provide a copy of the written opinion to the affected employee.

(15) **Employee information and training**.

(a) Training program.

(i) The employer must train each employee exposed to AN above the action level, each employee whose exposures are maintained below the action level by engineering and work practice controls, and each employee subject to potential skin or eye contact with liquid AN in accordance with the requirements of this section. The employer must institute a training program and ensure employee participation in the training program.

(ii) The training program must be provided at the time of initial assignment, or upon institution of the training program, and at least annually thereafter, and the employer must ensure that each employee is informed of the following:

(A) The information contained in Appendices A, B and C;

(B) The quantity, location, manner of use, release or storage of AN and the specific nature of operations which could result in exposure to AN, as well as any necessary protective steps;

(C) The purpose, proper use, and limitations of respirators and protective clothing;

(D) The purpose and a description of the medical surveillance program required by subsection (14) of this section;

(E) The emergency procedures developed, as required by subsection (9) of this section; and

(F) The engineering and work-practice controls, their function and the employee's relationship thereto; and

(G) A review of this standard.

(b) Access to training materials.

(i) The employer must make a copy of this standard and its appendices readily available to all affected employees.

(ii) The employer must provide, upon request, all materials relating to the employee information and training program to the director.

(16) **Communication of hazards**.

(a) Hazard communication-General.

(i) Chemical manufacturers, importers, distributors and employers must comply with all requirements of the Hazard Communication Standard (HCS), WAC 296-901-140 AN and AN-based materials not exempted under subsection (1)(b) of this section.

(ii) In classifying the hazards of AN and AN-based materials at least the following hazards are to be addressed: Cancer; central nervous system effects; liver effects; skin sensitization; skin, respiratory, and eye irritation; acute toxicity effects; and flammability.

(iii) Employers must include AN and AN-based materials in the hazard communication program established to comply with the HCS, WAC 296-901-140. Employers must ensure that each employee has access to labels on containers of AN and AN-based materials and to safety data sheets, and is trained in accordance with the requirements of HCS and subsection (15) of this section.

(iv) The employer may use labels or signs required by other statutes, regulations, or ordinances in addition to, or in combination with, signs and labels required by this subsection.

(v) The employer must ensure that no statement appears on or near any sign or label, required by this subsection, that contradicts or detracts from the required sign or label.

(b) Signs.

(i) The employer must post signs to clearly indicate all workplaces where AN concentrations exceed the permissible exposure limits. The signs must bear the following legend:

DANGER
ACRYLONITRILE (AN)
MAY CAUSE CANCER
RESPIRATORY PROTECTION MAY BE REQUIRED IN THIS AREA
AUTHORIZED PERSONNEL ONLY

(ii) The employer must ensure that signs required by (b) of this subsection are illuminated and cleaned as necessary so that the legend is readily visible.

(c) Labels.

(i) The employer must ensure that precautionary labels are in compliance with (a)(i) of this subsection and are affixed to all containers of liquid AN and AN-based materials not exempted under subsection (1)(b) of this section. The employer must ensure that the labels remain affixed when the materials are sold, distributed or otherwise leave the employer's workplace.

(ii) The employer must ensure that the precautionary labels required by (c) of this subsection are readily visible and legible.

(17) **Recordkeeping**.

(a) Objective data for exempted operations.

(i) Where the processing, use, and handling of products fabricated from PAN are exempted pursuant to subsection (1)(b) of this section, the employer must establish and maintain an accurate record of objective data reasonably relied upon in support of the exemption.

(ii) This record must include the following information:

(A) The relevant condition in subsection (1)(b) upon which exemption is based;

(B) The source of the objective data;

(C) The testing protocol, results of testing, and/or analysis of the material for the release of AN;

(D) A description of the operation exempted and how the data supports the exemption; and

(E) Other data relevant to the operations, materials, and processing covered by the exemption.

(iii) The employer must maintain this record for the duration of the employer's reliance upon such objective data.

(b) Exposure monitoring.

(i) The employer must establish and maintain an accurate record of all monitoring required by subsection (5) of this section.

(ii) This record must include:

(A) The dates, number, duration, and results of each of the samples taken, including a description of the sampling procedure used to determine representative employee exposure;

(B) A description of the sampling and analytical methods used and the data relied upon to establish that the methods used meet the accuracy and precision requirements of subsection (5)(f) of this section;

(C) Type of respiratory protective devices worn, if any; and

(D) Name, social security number and job classification of the employee monitored and of all other employees whose exposure the measurement is intended to represent.

(iii) The employer must maintain this record for at least forty years or the duration of employment plus twenty years, whichever is longer.

(c) Medical surveillance.

(i) The employer must establish and maintain an accurate record for each employee subject to medical surveillance as required by subsection (14) of this section.

(ii) This record must include:

(A) A copy of the physicians' written opinions;

(B) Any employee medical complaints related to exposure to AN;

(C) A copy of the information provided to the physician as required by subsection (14)(f) of this section; and

(D) A copy of the employee's medical and work history.

(iii) The employer must ensure that this record be maintained for at least forty years or for the duration of employment plus twenty years, whichever is longer.

(d) Availability.

(i) The employer must ensure that all records required to be maintained by this section be made available upon request to the director for examination and copying.

(ii) Records required by (a) through (c) of this subsection must be provided upon request to employees, designated representatives, and the assistant director in accordance with chapter 296-802 WAC. Records required by (a) of this subsection must be provided in the same manner as exposure monitoring records.

(iii) The employer must ensure that employee medical records required to be maintained by this section, be made available, upon request, for examination and copying, to the affected employee or former employee, or to a physician designated by the affected employee, former employee, or designated representative.

(e) Transfer of records.

(i) Whenever the employer ceases to do business, the successor employer must receive and retain all records required to be maintained by this section.

(ii) The employer must also comply with any additional requirements involving transfer of records set forth in WAC 296-802-60005.

(18) **Observation of monitoring**.

(a) Employee observation. The employer must provide affected employees, or their designated representatives, an opportunity to observe any monitoring of employee exposure to AN conducted pursuant to subsection (5) of this section.

(b) Observation procedures.

(i) Whenever observation of the monitoring of employee exposure to AN requires entry into an area where the use of protective clothing or equipment is required, the employer must provide the observer with personal protective clothing or equipment required to be worn by employees working in the area, ensure the use of such clothing and equipment, and require the observer to comply with all other applicable safety and health procedures.

(ii) Without interfering with the monitoring, observers shall be entitled:

(A) To receive an explanation of the measurement procedures;

(B) To observe all steps related to the measurement of airborne concentrations of AN performed at the place of exposure; and

(C) To record the results obtained.

(19) **Appendices**. The information contained in the appendices is not intended, by itself, to create any additional obligation not otherwise imposed, or to detract from any obligation.

WAC 296-62-07337 Appendix A--Substance safety data sheet for acrylonitrile.

(1) **Substance identification**.

(a) Substance: Acrylonitrile (CH2 CHCN).

(b) Synonyms: Propenenitrile; vinyl cyanide; cyanoethylene; AN; VCN; acylon; carbacryl; fumigrian; ventox.

(c) Acrylonitrile can be found as a liquid or vapor, and can also be found in polymer resins, rubbers, plastics, polyols, and other polymers having acrylonitrile as a raw or intermediate material.

(d) AN is used in the manufacture of acrylic and modiacrylic fibers, acrylic plastics and resins, specialty polymers, nitrile rubbers, and other organic chemicals. It has also been used as a fumigant.

(e) Appearance and odor: Colorless to pale yellow liquid with a pungent odor which can only be detected at concentrations above the permissible exposure level, in a range of 13-19 parts AN per million parts of air (13-19 ppm).

(f) Permissible exposure: Exposure may not exceed either:

(i) Two parts AN per million parts of air (2 ppm) averaged over the eight-hour workday; or

(ii) Ten parts AN per million parts of air (10 ppm) averaged over any fifteen-minute period in the workday.

(iii) In addition, skin and eye contact with liquid AN is prohibited.

(2) **Health hazard data**.

(a) Acrylonitrile can affect your body if you inhale the vapor (breathing), if it comes in contact with your eyes or skin, or if you swallow it. It may enter your body through your skin.

(b) Effects of overexposure:

(i) Short-term exposure: Acrylonitrile can cause eye irritation, nausea, vomiting, headache, sneezing, weakness, and light-headedness. At high concentrations, the effects of exposure may go on to loss of consciousness and death.

When acrylonitrile is held in contact with the skin after being absorbed into shoe leather or clothing, it may produce blisters following several hours of no apparent effect. Unless the shoes or clothing are removed immediately and the area washed, blistering will occur. Usually there is no pain or inflammation associated with blister formation.

(ii) Long-term exposure: Acrylonitrile has been shown to cause cancer in laboratory animals and has been associated with higher incidences of cancer in humans. Repeated or prolonged exposure of the skin to acrylonitrile may produce irritation and dermatitis.

(iii) Reporting signs and symptoms: You should inform your employer if you develop any signs or symptoms and suspect they are caused by exposure to acrylonitrile.

(3) **Emergency first aid procedures**.

(a) Eye exposure: If acrylonitrile gets into your eyes, wash your eyes immediately with large amounts of water, lifting the lower and upper lids occasionally. Get medical attention immediately. Contact lenses should not be worn when working with this chemical.

(b) Skin exposure: If acrylonitrile gets on your skin, immediately wash the contaminated skin with water. If acrylonitrile soaks through your clothing, especially your shoes, remove the clothing immediately and wash the skin with water. If symptoms occur after washing, get medical attention immediately. Thoroughly wash the clothing before reusing. Contaminated leather shoes or other leather articles should be discarded.

(c) Inhalation: If you or any other person breathes in large amounts of acrylonitrile, move the exposed person to fresh air at once. If breathing has stopped, perform artificial respiration. Keep the affected person warm and at rest. Get medical attention as soon as possible.

(d) Swallowing: When acrylonitrile has been swallowed, give the person large quantities of water immediately. After the water has been swallowed, try to get the person to vomit by having him touch the back of his throat with his finger. Do not make an unconscious person vomit. Get medical attention immediately.

(e) Rescue: Move the affected person from the hazardous exposure. If the exposed person has been overcome, notify someone else and put into effect the established emergency procedures. Do not become a casualty yourself. Understand your emergency rescue procedures and know the location of the emergency equipment before the need arises.

(f) Special first aid procedures: First aid kits containing an adequate supply (at least two dozen) of amyl nitrite pearls, each containing 0.3 ml, should be maintained at each site where acrylonitrile is used. When a person is suspected of receiving an overexposure to acrylonitrile, immediately remove that person from the contaminated area using established rescue procedures. Contaminated clothing must be removed and the acrylonitrile washed from the skin immediately. Artificial respiration should be started at once if breathing has stopped. If the person is unconscious, amyl nitrite may be used as an antidote by a properly trained individual in accordance with established emergency procedures. Medical aid should be obtained immediately.

(4) **Respirators and protective clothing**.

(a) Respirators: You may be required to wear a respirator for nonroutine activities, in emergencies, while your employer is in the process of reducing acrylonitrile exposures through engineering controls, and in areas where engineering controls are not feasible. If respirators are worn, they must have a label issued by the National Institute for Occupational Safety and Health under the provisions of 42 CFR part 84 stating that the respirators have been certified for use with organic vapors. For effective protection, respirators must fit your face and head snugly. Respirators should not be loosened or removed in work situations where their use is required.

(b) Supplied-air suits: In some work situations, the wearing of supplied-air suits may be necessary. Your employer must instruct you in their proper use and operation.

(c) Protective clothing:

(i) You must wear impervious clothing, gloves, face shield, or other appropriate protective clothing to prevent skin contact with liquid acrylonitrile. Where protective clothing is required, your employer is required to provide clean garments to you as necessary to assume that the clothing protects you adequately.

(ii) Replace or repair impervious clothing that has developed leaks.

(iii) Acrylonitrile should never be allowed to remain on the skin. Clothing and shoes which are not impervious to acrylonitrile should not be allowed to become contaminated with acrylonitrile, and if they do the clothing and shoes should be promptly removed and decontaminated. The clothing should be laundered or discarded after the AN is removed. Once acrylonitrile penetrates shoes or other leather articles, they should not be worn again.

(d) Eye protection: You must wear splashproof safety goggles in areas where liquid acrylonitrile may contact your eyes. In addition, contact lenses should not be worn in areas where eye contact with acrylonitrile can occur.

(5) **Precautions for safe use, handling, and storage**.

(a) Acrylonitrile is a flammable liquid, and its vapors can easily form explosive mixtures in air.

(b) Acrylonitrile must be stored in tightly closed containers in a cool, well-ventilated area, away from heat, sparks, flames, strong oxidizers (especially bromine), strong bases, copper, copper alloys, ammonia, and amines.

(c) Sources of ignition such as smoking and open flames are prohibited wherever acrylonitrile is handled, used, or stored in a manner that could create a potential fire or explosion hazard.

(d) You should use nonsparking tools when opening or closing metal containers of acrylonitrile, and containers must be bonded and grounded when pouring or transferring liquid acrylonitrile.

(e) You must immediately remove any nonimpervious clothing that becomes wetted with acrylonitrile, and this clothing must not be reworn until the acrylonitrile is removed from the clothing.

(f) Impervious clothing wet with liquid acrylonitrile can be easily ignited. This clothing must be washed down with water before you remove it.

(g) If your skin becomes wet with liquid acrylonitrile, you must promptly and thoroughly wash or shower with soap or mild detergent to remove any acrylonitrile from your skin.

(h) You must not keep food, beverages, or smoking materials, nor are you permitted to eat or smoke in regulated areas where acrylonitrile concentrations are above the permissible exposure limits.

(i) If you contact liquid acrylonitrile, you must wash your hands thoroughly with soap or mild detergent and water before eating, smoking, or using toilet facilities.

(j) Fire extinguishers and quick drenching facilities must be readily available, and you should know where they are and how to operate them.

(k) Ask your supervisor where acrylonitrile is used in your work area and for any additional plant safety and health rules.

(6) **Access to information**.

(a) Each year, your employer is required to inform you of the information contained in this Substance Safety Data Sheet for acrylonitrile. In addition, your employer must instruct you in the proper work-practices for using acrylonitrile, emergency procedures, and the correct use of protective equipment.

(b) Your employer is required to determine whether you are being exposed to acrylonitrile. You or your representative has the right to observe employee measurements and to record the results obtained. Your employer is required to inform you of your exposure. If your employer determines that you are being overexposed, they are required to inform you of the actions which are being taken to reduce your exposure to within permissible exposure limits.

(c) Your employer is required to keep records of your exposures and medical examinations. These records must be kept by the employer for at least forty years or for the period of your employment plus twenty years, whichever is longer.

(d) Your employer is required to release your exposure and medical records to you or your representative upon your request.

WAC 296-62-07338 Appendix B--Substance technical guidelines for acrylonitrile.

(1) **Physical and chemical data**.

(a) Substance identification:

(i) Synonyms: AN; VCN; vinyl cyanide; propenenitrile; cyanoethylene; Acrylon; Carbacryl; Fumigrain; Ventox.

(ii) Formula: CH2 = CHCN.

(iii) Molecular weight: 53.1.

(b) Physical data:

(i) Boiling point (760 mm Hg): 77.3°C (171°F);

(ii) Specific gravity (water = 1): 0.81 (at 20°C or 68°F);

(iii) Vapor density (air = 1 at boiling point of acrylonitrile): 1.83;

(iv) Melting point: -83°C (-117°F);

(v) Vapor pressure (@20°F): 83 mm Hg;

(vi) Solubility in water, percent by weight @20°C (68°F): 7.35;

(vii) Evaporation rate (Butyl Acetate = 1): 4.54; and

(viii) Appearance and odor: Colorless to pale yellow liquid with a pungent odor at concentrations above the permissible exposure level. Any detectable odor of acrylonitrile may indicate overexposure.

(2) **Fire, explosion, and reactivity hazard data**.

(a) Fire:

(i) Flash point: -1°C (30°F) (closed cup).

(ii) Autoignition temperature: 481°C (898°F).

(iii) Flammable limits air, percent by volume: Lower: 3, Upper: 17.

(iv) Extinguishing media: Alcohol foam, carbon dioxide, and dry chemical.

(v) Special fire-fighting procedures: Do not use a solid stream of water, since the stream will scatter and spread the fire. Use water to cool containers exposed to a fire.

(vi) Unusual fire and explosion hazards: Acrylonitrile is a flammable liquid. Its vapors can easily form explosive mixtures with air. All ignition sources must be controlled where acrylonitrile is handled, used, or stored in a manner that could create a potential fire or explosion hazard. Acrylonitrile vapors are heavier than air and may travel along the ground and be ignited by open flames or sparks at locations remote from the site at which acrylonitrile is being handled.

(vii) For purposes of compliance with the requirements of WAC 296-800-300, acrylonitrile is classified as a Class IB flammable liquid. For example, 7,500 ppm, approximately one-fourth of the lower flammable limit, would be considered to pose a potential fire and explosion hazard.

(viii) For purposes of compliance with WAC 296-800-280, acrylonitrile is classified as a Class B fire hazard.

(ix) For purpose of compliance with WAC 296-800-280, locations classified as hazardous due to the presence of acrylonitrile must be Class I, Group D.

(b) Reactivity:

(i) Conditions contributing to instability: Acrylonitrile will polymerize when hot, and the additional heat liberated by the polymerization may cause containers to explode. Pure AN may self-polymerize, with a rapid build-up of pressure, resulting in an explosion hazard. Inhibitors are added to the commercial product to prevent self-polymerization.

(ii) Incompatibilities: Contact with strong oxidizers (especially bromine) and strong bases may cause fires and explosions. Contact with copper, copper alloys, ammonia, and amines may start serious decomposition.

(iii) Hazardous decomposition products: Toxic gases and vapors (such as hydrogen cyanide, oxides of nitrogen, and carbon monoxide) may be released in a fire involving acrylonitrile and certain polymers made from acrylonitrile.

(iv) Special precautions: Liquid acrylonitrile will attack some forms of plastics, rubbers, and coatings.

(3) **Spill, leak, and disposal procedures**.

(a) If acrylonitrile is spilled or leaked, the following steps should be taken:

(i) Remove all ignition sources.

(ii) The area should be evacuated at once and re-entered only after the area has been thoroughly ventilated and washed down with water.

(iii) If liquid acrylonitrile or polymer intermediate, collect for reclamation or absorb in paper, vermiculite, dry sand, earth, or similar material, or wash down with water into process sewer system.

(b) Persons not wearing protective equipment should be restricted from areas of spills or leaks until clean-up has been completed.

(c) Waste disposal methods: Waste materials must be disposed of in a manner that is not hazardous to employees or to the general population. Spills of acrylonitrile and flushing of such spills must be channeled for appropriate treatment or collection for disposal. They must not be channeled directly into the sanitary sewer system. In selecting the method of waste disposal, applicable local, state, and federal regulations should be consulted.

(4) **Monitoring and measurement procedures**.

(a) Exposure above the permissible exposure limit:

(i) Eight-hour exposure evaluation: Measurements taken for the purpose of determining employee exposure under this section are best taken so that the average eight-hour exposure may be determined from a single eight-hour sample or two four-hour samples.

Air samples should be taken in the employee's breathing zone (air that would most nearly represent that inhaled by the employee).

(ii) Ceiling evaluation: Measurements taken for the purpose of determining employee exposure under this section must be taken during periods of maximum expected airborne concentrations of acrylonitrile in the employee's breathing zone. A minimum of three measurements should be taken on one work shift. The average of all measurements taken is an estimate of the employee's ceiling exposure.

(iii) Monitoring techniques: The sampling and analysis under this section may be performed by collecting the acrylonitrile vapor on charcoal adsorption tubes or other composition adsorption tubes, with subsequent chemical analysis. Sampling and analysis may also be performed by instruments such as real-time continuous monitoring systems, portable direct-reading instruments, or passive dosimeters. Analysis of resultant samples should be by gas chromatograph.

(iv) Appendix D lists methods of sampling and analysis which have been tested by NIOSH and OSHA for use with acrylonitrile. NIOSH and OSHA have validated modifications of NIOSH Method S-156 (see Appendix D) under laboratory conditions for concentrations below 1 ppm. The employer has the obligation of selecting a monitoring method which meets the accuracy and precision requirements of the standard under their unique field conditions. The standard requires that methods of monitoring must be accurate, to a 95-percent confidence level, to ±35-percent for concentrations of AN at or above 2 ppm, and to ±50-percent for concentrations below 2 ppm. In addition to the methods described in Appendix D, there are numerous other methods available for monitoring for AN in the workplace. Details on these other methods have been submitted by various companies to the rulemaking record, and are available at the OSHA Docket Office.

(b) Since many of the duties relating to employee exposure are dependent on the results of monitoring and measuring procedures, employers must ensure that the evaluation of employee exposures is performed by a competent industrial hygienist or other technically qualified person.

(5) **Protective clothing**.

(a) Employees must be provided with and required to wear appropriate protective clothing to prevent any possibility of skin contact with liquid AN. Because acrylonitrile is absorbed through the skin, it is important to prevent skin contact with liquid AN. Protective clothing must include impermeable coveralls or similar full-body work clothing, gloves, head-coverings, as appropriate to protect areas of the body which may come in contact with liquid AN.

(b) Employers should ascertain that the protective garments are impermeable to acrylonitrile. Nonimpermeable clothing and shoes should not be allowed to become contaminated with liquid AN. If permeable clothing does become contaminated, it should be promptly removed, placed in a regulated area for removal of the AN, and not worn again until the AN is removed. If leather footwear or other leather garments become wet from acrylonitrile, they should be replaced and not worn again, due to the ability of leather to absorb acrylonitrile and hold it against the skin. Since there is no pain associated with the blistering which may result from skin contact with liquid AN, it is essential that the employee be informed of this hazard so that he or she can be protected.

(c) Any protective clothing which has developed leaks or is otherwise found to be defective must be repaired or replaced. Clean protective clothing must be provided to the employee as necessary to ensure its protectiveness. Whenever impervious clothing becomes wet with liquid AN, it must be washed down with water before being removed by the employee. Employees are also required to wear splash-proof safety goggles where there is any possibility of acrylonitrile contacting the eyes.

(6) **Housekeeping and hygiene facilities**. For purposes of complying with WAC, 296-800-220 and 296-800-230, the following items should be emphasized:

(a) The workplace should be kept clean, orderly, and in a sanitary condition. The employer is required to institute a leak and spill detection program for operations involving liquid AN in order to detect sources of fugitive AN emissions.

(b) Dry sweeping and the use of compressed air is unsafe for the cleaning of floors and other surfaces where liquid AN may be found.

(c) Adequate washing facilities with hot and cold water are to be provided, and maintained in a sanitary condition. Suitable cleansing agents are also to be provided to ensure the effective removal of acrylonitrile from the skin.

(d) Change or dressing rooms with individual clothes storage facilities must be provided to prevent the contamination of street clothes with acrylonitrile. Because of the hazardous nature of acrylonitrile, contaminated protective clothing should be placed in a regulated area designated by the employer for removal of the AN before the clothing is laundered or disposed of.

(7) **Miscellaneous precautions**.

(a) Store acrylonitrile in tightly-closed containers in a cool, well-ventilated area and take necessary precautions to avoid any explosion hazard.

(b) High exposures to acrylonitrile can occur when transferring the liquid from one container to another.

(c) Nonsparking tools must be used to open and close metal acrylonitrile containers. These containers must be effectively grounded and bonded prior to pouring.

(d) Never store uninhibited acrylonitrile.

(e) Acrylonitrile vapors are not inhibited.

They may form polymers and clog vents of storage tanks.

(f) Use of supplied-air suits or other impervious coverings may be necessary to prevent skin contact with and provide respiratory protection from acrylonitrile where the concentration of acrylonitrile is unknown or is above the ceiling limit. Supplied-air suits should be selected, used, and maintained under the immediate supervision of persons knowledgeable in the limitations and potential life-endangering characteristics of supplied-air suits.

(g) Employers must advise employees of all areas and operations where exposure to acrylonitrile could occur.

(8) **Common operations**. Common operations in which exposure to acrylonitrile is likely to occur include the following: Manufacture of the acrylonitrile monomer; synthesis of acrylic fibers, ABS, SAN, and nitrile barrier plastics and resins, nitrile rubber, surface coatings, specialty chemicals; use as a chemical intermediate; use as a fumigant; and in the cyanoethylation of cotton.

WAC 296-62-07339 Appendix C--Medical surveillance guidelines for acrylonitrile.

(1) **Route of entry**.

(a) Inhalation;

(b) Skin absorption;

(c) Ingestion.

(2) **Toxicology**.

(a) Acrylonitrile vapor is an asphyxiant due to inhibitory action on metabolic enzyme systems. Animals exposed to 75 or 100 ppm for seven hours have shown signs of anoxia; in some animals which died at the higher level, cyanomethemoglobin was found in the blood. Two human fatalities from accidental poisoning have been reported; one was caused by inhalation of an unknown concentration of the vapor, and the other was thought to be caused by skin absorption or inhalation. Most cases of intoxication from industrial exposure have been mild, with rapid onset of eye irritation, headache, sneezing, and nausea. Weakness, lightheadedness, and vomiting may also occur. Exposure to high concentrations may produce profound weakness, asphyxia, and death. The vapor is a severe eye irritant. Prolonged skin contact with the liquid may result in absorption with systemic effects, and in the formation of large blisters after a latent period of several hours. Although there is usually little or no pain or inflammation, the affected skin resembles a second-degree thermal burn. Solutions spilled on exposed skin, or on areas covered only by a light layer of clothing, evaporate rapidly, leaving no irritation, or, at the most, mild transient redness. Repeated spills on exposed skin may result in dermatitis due to solvent effects.

(b) Results after one year of a planned two-year animal study on the effects of exposure to acrylonitrile have indicated that rats ingesting as little as 35 ppm in their drinking water develop tumors of the central nervous system. The interim results of this study have been supported by a similar study being conducted by the same laboratory, involving exposure of rats by inhalation of acrylonitrile vapor, which has shown similar types of tumors in animals exposed to 80 ppm.

(c) In addition, the preliminary results of an epidemiological study being performed by DuPont on a cohort of workers in their Camden, S.C. acrylic fiber plant indicate a statistically significant increase in the incidence of colon and lung cancers among employees exposed to acrylonitrile.

(3) **Signs and symptoms of acute overexposure**. Asphyxia and death can occur from exposure to high concentrations of acrylonitrile. Symptoms of overexposure include eye irritation, headache, sneezing, nausea and vomiting, weakness, and light-headedness. Prolonged skin contact can cause blisters on the skin with appearance of a second-degree burn, but with little or no pain. Repeated skin contact may produce scaling dermatitis.

(4) **Treatment of acute overexposure**. Remove employee from exposure. Immediately flush eyes with water and wash skin with soap or mild detergent and water. If AN has been swallowed, and person is conscious, induce vomiting. Give artificial respiration if indicated. More severe cases, such as those associated with loss of consciousness, may be treated by the intravenous administration of sodium nitrite, followed by sodium thiosulfate, although this is not as effective for acrylonitrile poisoning as for inorganic cyanide poisoning.

(5) **Surveillance and preventive considerations**.

(a) As noted above, exposure to acrylonitrile has been linked to increased incidence of cancers of the colon and lung in employees of the DuPont acrylic fiber plant in Camden, S.C. In addition, the animal testing of acrylonitrile has resulted in the development of cancers of the central nervous system in rats exposed by either inhalation or ingestion. The physician should be aware of the findings of these studies in evaluating the health of employees exposed to acrylonitrile.

(b) Most reported acute effects of occupational exposure to acrylonitrile are due to its ability to cause tissue anoxia and asphyxia. The effects are similar to those caused by hydrogen cyanide. Liquid acrylonitrile can be absorbed through the skin upon prolonged contact. The liquid readily penetrates leather, and will produce burns of the feet if footwear contaminated with acrylonitrile is not removed.

(c) It is important for the physician to become familiar with the operating conditions in which exposure to acrylonitrile may occur. Those employees with skin diseases may not tolerate the wearing of whatever protective clothing may be necessary to protect them from exposure. In addition, those with chronic respiratory disease may not tolerate the wearing of negative-pressure respirators.

(d) Surveillance and screening. Medical histories and laboratory examinations are required for each employee subject to exposure to acrylonitrile above the action level. The employer must screen employees for history of certain medical conditions which might place the employee at increased risk from exposure.

(i) Central nervous system dysfunction. Acute effects of exposure to acrylonitrile generally involve the central nervous system. Symptoms of acrylonitrile exposure include headache, nausea, dizziness, and general weakness. The animal studies cited above suggest possible carcinogenic effects of acrylonitrile on the central nervous system, since rats exposed by either inhalation or ingestion have developed similar CNS tumors.

(ii) Respiratory disease. The DuPont data indicate an increased risk of lung cancer among employees exposed to acrylonitrile.

(iii) Gastrointestinal disease. The DuPont data indicate an increased risk of cancer of the colon among employees exposed to acrylonitrile. In addition, the animal studies show possible tumor production in the stomachs of the rats in the ingestion study.

(iv) Skin disease. Acrylonitrile can cause skin burns when prolonged skin contact with the liquid occurs. In addition, repeated skin contact with the liquid can cause dermatitis.

(e) General. The purpose of the medical procedures outlined in the standard is to establish a baseline for future health monitoring. Persons unusually susceptible to the effects of anoxia or those with anemia would be expected to be at increased risk. In addition to emphasis on the CNS, respiratory and gastro-intestinal systems, the cardiovascular system, liver, and kidney function should also be stressed.

WAC 296-62-07340 Appendix D--Sampling and analytical methods for acrylonitrile.

(1) There are many methods available for monitoring employee exposures to acrylonitrile. Most of these involve the use of charcoal tubes and sampling pumps, with analysis by gas chromatograph. The essential differences between the charcoal tube methods include, among others, the use of different desorbing solvents, the use of different lots of charcoal, and the use of different equipment for analysis of the samples.

(2) Besides charcoal, considerable work has been performed on methods using porous polymer sampling tubes and passive dosimeters. In addition, there are several portable gas analyzers and monitoring units available on the open market.

(3) This appendix contains details for the methods which have been tested at OSHA Analytical Laboratory in Salt Lake City, and NIOSH in Cincinnati. Each is a variation on NIOSH Method S-156, which is also included for reference. This does not indicate that these methods are the only ones which will be satisfactory. There also may be workplace situations in which these methods are not adequate, due to such factors as high humidity. Copies of the other methods available to OSHA are available in the rulemaking record, and may be obtained from the OSHA docket office. These include, the Union Carbide, Monsanto, Dow Chemical and Dow Badische methods, as well as NIOSH Method P & CAM 127.

(4) Employers who note problems with sample breakthrough should try larger charcoal tubes. Tubes of larger capacity are available, and are often used for sampling vinyl chloride. In addition, lower flow rates and shorter sampling times should be beneficial in minimizing breakthrough problems.

(5) Whatever method the employer chooses, they must be ensured of the method's accuracy and precision under the unique conditions present in their workplace.

(6) NIOSH Method S-156 (unmodified).

Analyte: Acrylonitrile.

Matrix: Air.

Procedure: Absorption on charcoal, desorption with methanol, GC.

(a) Principle of the method. Reference (k)(i) of this subsection.

(i) A known volume of air is drawn through a charcoal tube to trap the organic vapors present.

(ii) The charcoal in the tube is transferred to a small, stoppered sample container, and the analyte is desorbed with methanol.

(iii) An aliquot of the desorbed sample is injected into a gas chromatograph.

(iv) The area of the resulting peak is determined and compared with areas obtained for standards.

(b) Range and sensitivity.

(i) This method was validated over the range of 17.5-70.0 mg/cu m at an atmospheric temperature and pressure of 22°C and 760 mm Hg, using a twenty-liter sample. Under the conditions of sample size (20 liters) the probable useful range of this method is 4.5-135 mg/cu m. The method is capable of measuring much smaller amounts if the desorption efficiency is adequate. Desorption efficiency must be determined over the range used.

(ii) The upper limit of the range of the method is dependent on the adsorptive capacity of the charcoal tube. This capacity varies with the concentrations of acrylonitrile and other substances in the air. The first section of the charcoal tube was found to hold at least 3.97 mg of acrylonitrile when a test atmosphere containing 92.0 mg/cu m of acrylonitrile in air was sampled 0.18 liter per minute for 240 minutes; at that time the concentration of acrylonitrile in the effluent was less than 5 percent of that in the influent. (The charcoal tube consists of two sections of activated charcoal separated by a section of urethane foam.) See (f)(ii) of this subsection. If a particular atmosphere is suspected of containing a large amount of contaminant, a smaller sampling volume should be taken.)

(c) Interference.

(i) When the amount of water in the air is so great that condensation actually occurs in the tube, organic vapors will not be trapped efficiently. Preliminary experiments using toluene indicate that high humidity severely decreases the breakthrough volume.

(ii) When interfering compounds are known or suspected to be present in the air, such information, including their suspected identities, should be transmitted with the sample.

(iii) It must be emphasized that any compound which has the same retention time as the analyte at the operating conditions described in this method is an interference. Retention time data on a single column cannot be considered proof of chemical identity.

(iv) If the possibility of interference exists, separation conditions (column packing, temperature, etc.) must be changed to circumvent the problem.

(d) Precision and accuracy.

(i) The coefficient of variation (CVt) for the total analytical and sampling method in the range of 17.5-70.0 mg/cu m was 0.073. This value corresponds to a 3.3 mg/cu m standard deviation at the (previous) OSHA standard level (20 ppm). Statistical information and details of the validation and experimental test procedures can be found in (k)(ii) of this subsection.

(ii) On the average the concentrations obtained at the 20 ppm level using the overall sampling and analytical method were 6.0 percent lower than the "true" concentrations for a limited number of laboratory experiments. Any difference between the "found" and "true" concentrations may not represent a bias in the sampling and analytical method, but rather a random variation from the experimentally determined "true" concentration. Therefore, no recovery correction should be applied to the final result in (j)(v) of this subsection.

(e) Advantages and disadvantages of the method.

(i) The sampling device is small, portable, and involves no liquids. Interferences are minimal, and most of those which do occur can be eliminated by altering chromatographic conditions. The tubes are analyzed by means of a quick, instrumental method.

(ii) The method can also be used for the simultaneous analysis of two or more substances suspected to be present in the same sample by simply changing gas chromatographic conditions.

(iii) One disadvantage of the method is that the amount of sample which can be taken is limited by the number of milligrams that the tube will hold before overloading. When the sample value obtained for the backup section of the charcoal tube exceeds 25 percent of that found on the front section, the possibility of sample loss exists.

(iv) Furthermore, the precision of the method is limited by the reproducibility of the pressure drop across the tubes. This drop will affect the flow rate and cause the volume to be imprecise, because the pump is usually calibrated for one tube only.

(f) Apparatus.

(i) A calibrated personal sampling pump whose flow can be determined within ±5 percent at the recommended flow rate. Reference (k)(iii) of this subsection.

(ii) Charcoal tubes: Glass tubes with both ends flame sealed, 7 cm long with a 6 mm O.D. and a 4 mm I.D., containing 2 sections of 20/40 mesh activated charcoal separated by a 2 mm portion of urethane foam. The activated charcoal is prepared from coconut shells and is fired at 600°C prior to packing. The adsorbing section contains 100 mg of charcoal, the backup section 50 mg. A 3 mm portion of urethane foam is placed between the outlet end of the tube and the backup section. A plug of silicated glass wool is placed in front of the adsorbing section. The pressure drop across the tube must be less than 1 inch of mercury at a flow rate of 1 liter per minute.

(iii) Gas chromatograph equipped with a flame ionization detector.

(iv) Column (4 ft x 1/4 in stainless steel) packed with 50/80 mesh Poropak, type Q.

(v) An electronic integrator or some other suitable method for measuring peak areas.

(vi) Two-milliliter sample containers with glass stoppers or Teflon-lined caps. If an automatic sample injector is used, the associated vials may be used.

(vii) Microliter syringes: Ten-microliter and other convenient sizes for making standards.

(viii) Pipets: 1.0 ml delivery pipets.

(ix) Volumetric flask: 10 ml or convenient sizes for making standard solutions.

(g) Reagents.

(i) Chromatographic quality methanol.

(ii) Acrylonitrile, reagent grade.

(iii) Hexane, reagent grade.

(iv) Purified nitrogen.

(v) Prepurified hydrogen.

(vi) Filtered compressed air.

(h) Procedure.

(i) Cleaning of equipment. All glassware used for the laboratory analysis should be detergent washed and thoroughly rinsed with tap water and distilled water.

(ii) Calibration of personal pumps. Each personal pump must be calibrated with a representative charcoal tube in the line. This will minimize errors associated with uncertainties in the sample volume collected.

(iii) Collection and shipping of samples.

(A) Immediately before sampling, break the ends of the tube to provide an opening at least one-half the internal diameter of the tube (2mm).

(B) The smaller section of charcoal is used as a backup and should be positioned nearest the sampling pump.

(C) The charcoal tube should be placed in a vertical direction during sampling to minimize channeling through the charcoal.

(D) Air being sampled should not be passed through any hose or tubing before entering the charcoal tube.

(E) A maximum sample size of 20 liters is recommended. Sample at a flow of 0.20 liter per minute or less. The flow rate should be known with an accuracy of at least ±5 percent.

(F) The temperature and pressure of the atmosphere being sampled should be recorded. If pressure reading is not available, record the elevation.

(G) The charcoal tubes should be capped with the supplied plastic caps immediately after sampling. Under no circumstances should rubber caps be used.

(H) With each batch of ten samples submit one tube from the same lot of tubes which was used for sample collection and which is subjected to exactly the same handling as the samples except that no air is drawn through it. Label this as a blank.

(I) Capped tubes should be packed tightly and padded before they are shipped to minimize tube breakage during shipping.

(J) A sample of the bulk material should be submitted to the laboratory in a glass container with a Teflon-lined cap. This sample should not be transported in the same container as the charcoal tubes.

(iv) Analysis of samples.

(A) Preparation of samples. In preparation for analysis, each charcoal tube is scored with a file in front of the first section of charcoal and broken open. The glass wool is removed and discarded. The charcoal in the first (larger) section is transferred to a 2 ml stoppered sample container. The separating section of foam is removed and discarded; the second section is transferred to another stoppered container. These two sections are analyzed separately.

(B) Desorption of samples. Prior to analysis, 1.0 ml of methanol is pipetted into each sample container. Desorption should be done for 30 minutes. Tests indicate that this is adequate if the sample is agitated occasionally during this period. If an automatic sample injector is used, the sample vials should be capped as soon as the solvent is added to minimize volatilization.

(C) GC conditions. The typical operating conditions for the gas chromatograph are:

(I) 50 ml/min (60 psig) nitrogen carrier gas flow.

(II) 65 ml/min (24 psig) hydrogen gas flow to detector.

(III) 500 ml/min (50 psig) air flow to detector.

(IV) 235°C injector temperature.

(V) 255°C manifold temperature (detector).

(VI) 155°C column temperature.

(D) Injection. The first step in the analysis is the injection of the sample into the gas chromatograph. To eliminate difficulties arising from blowback or distillation within the syringe needle, one should employ the solvent flush injection technique. The 10-microliter syringe is first flushed with solvent several times to wet the barrel and plunger. Three microliters of solvent are drawn into the syringe to increase the accuracy and reproducibility of the injected sample volume.

The needle is removed from the solvent, and the plunger is pulled back about 0.2 microliter to separate the solvent flush from the sample with a pocket of air to be used as a marker. The needle is then immersed in the sample, and a five microliter aliquot is withdrawn, taking into consideration the volume of the needle, since the sample in the needle will be completely injected. After the needle is removed from the sample and prior to injection, the plunger is pulled back 1.2 microliters to minimize evaporation of the sample from the tip of the needle. Observe that the sample occupies 4.9-5.0 microliters in the barrel of the syringe. Duplicate injections of each sample and standard should be made. No more than a 3 percent difference in area is to be expected. An automatic sample injector can be used if it is shown to give reproducibility at least as good as the solvent flush method.

(E) Measurement of area. The area of the sample peak is measured by an electronic integrator or some other suitable form of area measurement, and preliminary results are read from a standard curve prepared as discussed below.

(v) Determination of desorption efficiency.

(A) Importance of determination. The desorption efficiency of a particular compound can vary from one laboratory to another and also from one batch of charcoal to another. Thus, it is necessary to determine at least once the percentage of the specific compound that is removed in the desorption process, provided the same batch of charcoal is used.

(B) Procedure for determining desorption efficiency.

(I) Activated charcoal equivalent to the amount in the first section of the sampling tube (100 mg) is measured into a 2.5 in., 4 mm I.D. glass tube, flame sealed at one end. This charcoal must be from the same batch as that used in obtaining the samples and can be obtained from unused charcoal tubes. The open end is capped with Parafilm. A known amount of hexane solution of acrylonitrile containing 0.239 g/ml is injected directly into the activated charcoal with a microliter syringe, and tube is capped with more Parafilm. When using an automatic sample injector, the sample injector vials, capped with Teflon-faced septa, may be used in place of the glass tube.

(II) The amount injected is equivalent to that present in a twenty-liter air sample at the selected level.

(III) Six tubes at each of three levels (0.5X, 1X, and 2X of the standard) are prepared in this manner and allowed to stand for at least overnight to ensure complete adsorption of the analyte onto the charcoal. These tubes are referred to as the sample. A parallel blank tube should be treated in the same manner except that no sample is added to it. The sample and blank tubes are desorbed and analyzed in exactly the same manner as the sampling tube described in (h)(iv) of this subsection.

(IV) Two or three standards are prepared by injecting the same volume of compound into 1.0 ml of methanol with the same syringe used in the preparation of the samples. These are analyzed with the samples.

(V) The desorption efficiency (D.E.) equals the average weight in mg recovered from the tube divided by the weight in mg added to the tube, or

$$D.E. = \frac{\text{Average weight recovered (mg)}}{\text{weight added (mg)}}$$

(VI) The desorption efficiency is dependent on the amount of analyte collected on the charcoal. Plot the desorption efficiency versus weight of analyte found. This curve is used in (j)(iv) of this subsection to correct for adsorption losses.

(i) Calibration and standards. It is convenient to express concentration of standards in terms of mg/1.0 ml methanol, because samples are desorbed in this amount of methanol. The density of the analyte is used to convert mg into microliters for easy measurement with a microliter syringe. A series of standards, varying in concentration over the range of interest, is prepared and analyzed under the same GC conditions and during the same time period as the unknown samples. Curves are established by plotting concentration in mg/1.0 ml versus peak area.

Note: Since no internal standard is used in the method, standard solutions must be analyzed at the same time that the sample analysis is done. This will minimize the effect of known day-to-day variations and variations during the same day of the FID response.

(j) Calculations.

(i) Read the weight, in mg, corresponding to each peak area from the standard curve. No volume corrections are needed, because the standard curve is based on mg/1.0 ml methanol and the volume of sample injected is identical to the volume of the standards injected.

(ii) Corrections for the bank must be made for each sample.

mg = mg sample-mg blank

Where:

mg sample = mg found in front section of sample tube.

mg sample = mg found in front section of blank tube.

Note: A similar procedure is followed for the backup sections.

(iii) Add the weights found in the front and backup sections to get the total weight in the sample.

(iv) Read the desorption efficiency from the curve (reference (h)(v)(B) of this subsection) for the amount found in the front section. Divide the total weight by this desorption efficiency to obtain the corrected mg/sample.

$$\text{Corrected mg/sample} = \frac{\text{Total weight}}{\text{D.E.}}$$

(v) The concentration of the analyte in the air sampled can be expressed in mg/cu m.

$$\text{mg/cu m} = \text{Corrected mg (see (j)(iv))} \times \frac{1{,}000 \text{ (liter/cu m)}}{\text{air volume sampled (liter)}}$$

(vi) Another method of expressing concentration is ppm.

$$\text{ppm} = \text{mg/cu m} \times 24.45/\text{M.W.} \times 760/P \times T + 273/298$$

Where:

P = Pressure (mm Hg) of air sampled.

T = Temperature (°C) of air sampled.

24.45 = Molar volume (liter/mole) at 25°C and 760 mm Hg.

M.W. = Molecular weight (g/mole) of analyte.

760 = Standard pressure (mm Hg).

298 = Standard temperature (°K).

(k) References.

(i) White, L. D. et al., "A Convenient Optimized Method for the Analysis of Selected Solvent Vapors in the Industrial Atmosphere," Amer. Ind. Hyg. Assoc. J., 31:225 (1970).

(ii) Documentation of NIOSH Validation Tests, NIOSH Contract No. CDC-99-74-45.

(iii) Final Report, NIOSH Contract HSM-99-71-31, "Personal Sampler Pump for Charcoal Tubes," September 15, 1972.

(7) **NIOSH Modification of NIOSH Method S-156**. The NIOSH recommended method for low levels for acrylonitrile is a modification of method S-156. It differs in the following respects:

(a) Samples are desorbed using 1 ml of 1 percent acetone in CS2 rather than methanol.

(b) The analytical column and conditions are:

(i) Column: 20 percent SP-1000 on 80/100 Supelcoport 10 feet x 1/8 inch S.S.

(ii) Conditions:

Injector temperature: 200°C.

Detector temperature: 100°C.

Column temperature: 85°C.

Helium flow: 25 ml/min.

Air flow: 450 ml/min.

Hydrogen flow: 55 ml/min.

(c) A 2 µl injection of the desorbed analyte is used.

(d) A sampling rate of 100 ml/min is recommended.

(8) **OSHA Laboratory Modification of NIOSH Method S-156**.

(a) Analyte: Acrylonitrile.

(b) Matrix: Air.

(c) Procedure: Adsorption on charcoal, desorption with methanol, GC.

(d) Principle of the method (subsection (1)(a) of this section).

(i) A known volume of air is drawn through a charcoal tube to trap the organic vapors present.

(ii) The charcoal in the tube is transferred to a small, stoppered sample vial, and the analyte is desorbed with methanol.

(iii) An aliquot of the desorbed sample is injected into a gas chromatograph.

(iv) The area of the resulting peak is determined and compared with areas obtained for standards.

(e) Advantages and disadvantages of the method.

(i) The sampling device is small, portable, and involves no liquids. Interferences are minimal, and most of those which do occur can be eliminated by altering chromatographic conditions. The tubes are analyzed by means of a quick, instrumental method.

(ii) This method may not be adequate for the simultaneous analysis of two or more substances.

(iii) The amount of sample which can be taken is limited by the number of milligrams that the tube will hold before overloading. When the sample value obtained for the backup section of the charcoal tube exceeds 25 percent of that found on the front section, the possibility of sample loss exists.

(iv) The precision of the method is limited by the reproducibility of the pressure drop across the tubes. This drop will affect the flow rate and cause the volume to be imprecise, because the pump is usually calibrated for one tube only.

(f) Apparatus.

(i) A calibrated personal sampling pump whose flow can be determined within ±5 percent at the recommended flow rate.

(ii) Charcoal tubes: Glass tube with both ends flame sealed, 7 cm long with a 6 mm O.D. and a 4 mm I.D., containing 2 sections of 20/40 mesh activated charcoal separated by a 2 mm portion of urethane foam. The activated charcoal is prepared from coconut shells and is fired at 600°C prior to packing. The absorbing section contains 100 mg of charcoal, the back-up section 50 mg. A 3 mm portion of urethane foam is placed between the outlet end of the tube and the back-up section. A plug of silicated glass wool is placed in front of the adsorbing section. The pressure drop across the tube must be less than one inch of mercury at a flow rate of 1 liter per minute.

(iii) Gas chromatograph equipped with a nitrogen phosphorus detector.

(iv) Column (10 ft. x 1/8 in stainless steel) packed with 100/120 Supelcoport coated with 10 percent SP 1000.

(v) An electronic integrator or some other suitable method for measuring peak area.

(vi) Two-milliliter sample vials with Teflon-lined caps.

(vii) Microliter syringes: 10 microliter, and other convenient sizes for making standards.

(viii) Pipets: 1.0 ml delivery pipets.

(ix) Volumetric flasks: Convenient sizes for making standard solutions.

(g) Reagents.

(i) Chromatographic quality methanol.

(ii) Acrylonitrile, reagent grade.

(iii) Filtered compressed air.

(iv) Purified hydrogen.

(v) Purified helium.

(h) Procedure.

(i) Cleaning of equipment. All glassware used for the laboratory analysis should be properly cleaned and free of organics which could interfere in the analysis.

(ii) Calibration of personal pumps. Each pump must be calibrated with a representative charcoal tube in the line.

(iii) Collection and shipping of samples.

(A) Immediately before sampling, break the ends of the tube to provide an opening at least one-half the internal diameter of the tube (2 mm).

(B) The smaller section of the charcoal is used as the backup and should be placed nearest the sampling pump.

(C) The charcoal should be placed in a vertical position during sampling to minimize channeling through the charcoal.

(D) Air being sampled should not be passed through any hose or tubing before entering the charcoal tube.

(E) A sample size of 20 liters is recommended. Sample at a flow rate of approximately 0.2 liters per minute. The flow rate should be known with an accuracy of at least ±5 percent.

(F) The temperature and pressure of the atmosphere being sampled should be recorded.

(G) The charcoal tubes should be capped with the supplied plastic caps immediately after sampling. Rubber caps should not be used.

(H) Submit at least one blank tube (a charcoal tube subjected to the same handling procedures, without having any air drawn through it) with each set of samples.

(I) Take necessary shipping and packing precautions to minimize breakage of samples.

(iv) Analysis of samples.

(A) Preparation of samples. In preparation for analysis, each charcoal tube is scored with a file in front of the first section of charcoal and broken open. The glass wool is removed and discarded. The charcoal in the first (larger) section is transferred to a 2 ml vial. The separating section of foam is removed and discarded; the section is transferred to another capped vial. These two sections are analyzed separately.

(B) Desorption of samples. Prior to analysis, 1.0 ml of methanol is pipetted into each sample container. Desorption should be done for 30 minutes in an ultrasonic bath. The sample vials are recapped as soon as the solvent is added.

(C) GC conditions. The typical operating conditions for the gas chromatograph are:

(I) 30 ml/min (60 psig) helium carrier gas flow.

(II) 3.0 ml/min (30 psig) hydrogen gas flow to detector.

(III) 50 ml/min (60 psig) air flow to detector.

(IV) 200°C injector temperature.

(V) 200°C dejector temperature.

(VI) 100°C column temperature.

(D) Injection. Solvent flush technique or equivalent.

(E) Measurement of area. The area of the sample peak is measured by an electronic integator or some other suitable form of area measurement, and preliminary results are read from a standard curve prepared as discussed below.

(v) Determination of desorption efficiency.

(A) Importance of determination. The desorption efficiency of a particular compound can vary from one laboratory to another and also from one batch of charcoal to another. Thus, it is necessary to determine, at least once, the percentage of the specific compound that is removed in the desorption process, provided the same batch of charcoal is used.

(B) Procedure for determining desorption efficiency. The reference portion of the charcoal tube is removed. To the remaining portion, amounts representing 0.5X, 1X, and 2X (X represents TLV) based on a 20 l air sample are injected onto several tubes at each level. Dilutions of acrylonitrile with methanol are made to allow injection of measurable quantities. These tubes are then allowed to equilibrate at least overnight. Following equilibration they are analyzed following the same procedure as the samples. A curve of the desorption efficiency (amt recovered/amt added) is plotted versus amount of analyte found. This curve is used to correct for adsorption losses.

(i) Calibration and standards. A series of standards, varying in concentration over the range of interest, is prepared and analyzed under the same GC conditions and during the same time period as the unknown samples. Curves are prepared by plotting concentration versus peak area.

Note: Since no internal standard is used in the method, standard solutions must be analyzed at the same time that the sample analysis is done. This will minimize the effect of known day-to-day variations and variations during the same day of the NPD response. Multiple injections are necessary.

(j) Calculations. Read the weight, corresponding to each peak area from the standard curve, correct for the blank, correct for the desorption efficiency, and make necessary air volume corrections.

(k) Reference. NIOSH Method S-156.

WAC 296-62-07342 1,2-Dibromo-3-chloropropane.

(1) **Scope and application**.

(a) This section applies to occupational exposure to 1,2-dibromo-3-chloropropane (DBCP).

(b) This section does not apply to:

(i) Exposure to DBCP which results solely from the application and use of DBCP as a pesticide; or

(ii) The storage, transportation, distribution or sale of DBCP in intact containers sealed in such a manner as to prevent exposure to DBCP vapors or liquids, except for the requirements of subsections (11), (16) and (17) of this section.

(2) **Definitions applicable to this section**:

(a) **Authorized person**. Any person specifically authorized by the employer and whose duties require the person to be present in areas where DBCP is present; and any person entering this area as a designated representative of employees exercising an opportunity to observe employee exposure monitoring.

(b) **DBCP**. 1,2-dibromo-3-chloropropane, Chemical Abstracts Service Registry Number 96-12-8, and includes all forms of DBCP.

(c) **Director**. The director of labor and industries, or their authorized representative.

(d) **Emergency**. Any occurrence such as, but not limited to equipment failure, rupture of containers, or failure of control equipment which may, or does, result in unexpected release of DBCP.

(3) **Permissible exposure limits**.

(a) Inhalation.

(i) Time-weighted average limit (TWA). The employer must ensure that no employee is exposed to an airborne concentration in excess of 1 part DBCP per billion part of air (ppb) as an eight-hour time-weighted average.

(ii) Ceiling limit. The employer must ensure that no employee is exposed to an airborne concentration in excess of 5 parts DBCP per billion parts of air (ppb) as averaged over any 15 minutes during the working day.

(b) Dermal and eye exposure. The employer must ensure that no employee is exposed to eye or skin contact with DBCP.

(4) **Notification of use**. Within ten days of the effective date of this section or within ten days following the introduction of DBCP into the workplace, every employer who has a workplace where DBCP is present must report the following information to the director for each such workplace:

(a) The address and location of each workplace in which DBCP is present;

(b) A brief description of each process or operation which may result in employee exposure to DBCP;

(c) The number of employees engaged in each process or operation who may be exposed to DBCP and an estimate of the frequency and degree of exposure that occurs;

(d) A brief description of the employer's safety and health program as it relates to limitation of employee exposure to DBCP.

(5) **Regulated areas**. The employer must establish, within each place of employment, regulated areas wherever DBCP concentrations are in excess of the permissible exposure limit.

(a) The employer must limit access to regulated areas to authorized persons.

(b) All employees entering or working in a regulated area must wear respiratory protection in accordance with Table I.

(6) **Exposure monitoring**.

(a) General. Determinations of airborne exposure levels must be made from air samples that are representative of each employee's exposure to DBCP over an eight-hour period. (For the purposes of this section, employee exposure is that exposure which would occur if the employee were not using a respirator.)

(b) Initial. Each employer who has a place of employment in which DBCP is present must monitor each workplace and work operation to accurately determine the airborne concentrations of DBCP to which employees may be exposed.

(c) Frequency.

(i) If the monitoring required by this section reveals employee exposures to be below the permissible exposure limits, the employer must repeat these determinations at least quarterly.

(ii) If the monitoring required by this section reveals employee exposure to be in excess of the permissible exposure limits, the employer must repeat these determinations for each such employee at least monthly. The employer must continue these monthly determinations until at least two consecutive measurements, taken at least seven days apart, are below the permissible exposure limit, thereafter the employer must monitor at least quarterly.

(d) Additional. Whenever there has been a production process, control or personnel change which may result in any new or additional exposure to DBCP, or whenever the employer has any other reason to suspect a change which may result in new or additional exposure to DBCP, additional monitoring which complies with this subsection must be conducted.

(e) Employee notification.

(i) Within five working days after the receipt of monitoring results, the employer must notify each employee in writing of results which represent the employee's exposure.

(ii) Whenever the results indicate that employee exposure exceeds the permissible exposure limit, the employer must include in the written notice a statement that the permissible exposure limit was exceeded and a description of the corrective action being taken to reduce exposure to or below the permissible exposure limits.

(f) Accuracy of measurement. The method of measurement must be accurate, to a confidence level of 95 percent, to within plus or minus 25 percent for concentrations of DBCP at or above the permissible exposure limits.

(7) **Methods of compliance**.

(a) Priority of compliance methods. The employer must institute engineering and work-practice controls to reduce and maintain employee exposures to DBCP at or below the permissible exposure limit, except to the extent that the employer establishes that such controls are not feasible. Where feasible engineering and work-practice controls are not sufficient to reduce employee exposures to within the permissible exposure limit, the employer must nonetheless use them to reduce exposures to the lowest level achievable by these controls, and must supplement them by use of respiratory protection.

(b) Compliance program.

(i) The employer must establish and implement a written program to reduce employee exposure to DBCP to or below the permissible exposure limit solely by means of engineering and work-practice controls as required by this section.

(ii) The written program must include a detailed schedule for development and implementation of the engineering and work-practice controls. These plans must be revised at least every six months to reflect the current status of the program.

(iii) Written plans for these compliance programs must be submitted upon request to the director, and must be available at the worksite for examination and copying by the director, and any affected employee or designated representative of employees.

(iv) The employer must institute and maintain at least the controls described in his most recent written compliance program.

(8) **Respiratory protection**.

(a) General. For employees who are required to use respirators under this section, the employer must provide each employee an appropriate respirator that complies with the requirements of this subsection. Respirators must be used during:

(i) Periods necessary to install or implement feasible engineering and work-practice controls;

(ii) Maintenance and repair activities for which engineering and work-practice controls are not feasible;

(iii) Work operations for which feasible engineering and work-practice controls are not yet sufficient to reduce employee exposure to or below the permissible exposure limit;

(iv) Emergencies.

(b) The employer must establish, implement, and maintain a respiratory protection program as required by chapter 296-842 WAC, Respirators, which covers each employee required by this chapter to use a respirator.

(c) Respirator selection. The employer must:

(i) Select and provide to employees appropriate respirators according to this chapter and WAC 296-842-13005 in the respirator rule.

(ii) Provide employees with one of the following respirator options to use for entry into, or escape from, unknown DBCP concentrations:

(A) A combination respirator that includes a full-facepiece air-line respirator operated in a pressure-demand or other positive-pressure mode or continuous-flow mode and an auxiliary self-contained breathing apparatus (SCBA) operated in a pressure-demand or positive-pressure mode; or

(B) A full-facepiece SCBA operated in a pressure-demand or other positive-pressure mode.

(9) **Reserved**.

(10) **Emergency situations**.

(a) Written plans.

(i) A written plan for emergency situations must be developed for each workplace in which DBCP is present.

(ii) Appropriate portions of the plan must be implemented in the event of an emergency.

(b) Employees engaged in correcting conditions must be equipped as required in subsection (11) of this section until the emergency is abated.

(c) Evacuation. Employees not engaged in correcting the emergency must be removed and restricted from the area and normal operations in the affected area must not be resumed until the emergency is abated.

(d) Alerting employees. Where there is a possibility of employee exposure to DBCP due to the occurrence of an emergency, a general alarm must be installed and maintained to promptly alert employees of such occurrences.

(e) Medical surveillance. For any employee exposed to DBCP in an emergency situation, the employer must provide medical surveillance in accordance with subsection (14) of this section.

(f) Exposure monitoring.

(i) Following an emergency, the employer must conduct monitoring which complies with subsection (6) of this section.

(ii) In workplaces not normally subject to periodic monitoring, the employer may terminate monitoring when two consecutive measurements indicate exposures below the permissible exposure limit.

(11) **Protective clothing and equipment**.

(a) Provision and use. Where eye or skin contact with liquid or solid DBCP may occur, employers must provide at no cost to the employee, and ensure that employees wear impermeable protective clothing and equipment in accordance with WAC 296-800-160 to protect the area of the body which may come in contact with DBCP.

(b) Cleaning and replacement.

(i) The employer must clean, launder, maintain, or replace protective clothing and equipment required by this subsection to maintain their effectiveness. In addition, the employer must provide clean protective clothing and equipment at least daily to each affected employee.

(ii) Removal and storage.

(A) The employer must ensure that employees remove DBCP contaminated work clothing only in change rooms provided in accordance with subsection (13) of this section.

(B) The employer must ensure that employees promptly remove any protective clothing and equipment which becomes contaminated with DBCP-containing liquids and solids. This clothing must not be reworn until the DBCP has been removed from the clothing or equipment.

(C) The employer must ensure that no employee takes DBCP contaminated protective devices and work clothing out of the change room, except those employees authorized to do so for the purpose of laundering, maintenance, or disposal.

(iii) The employer must ensure that DBCP-contaminated protective work clothing and equipment is placed and stored in closed containers which prevent dispersion of DBCP outside the container.

(iv) The employer must inform any person who launders or cleans DBCP-contaminated protective clothing or equipment of the potentially harmful effects of exposure to DBCP.

(v) Containers of DBCP-contaminated protective devices or work clothing which are to be taken out of change rooms or the workplace for cleaning, maintenance or disposal must bear labels with the following information: CONTAMINATED WITH 1,2-Dibromo-3-chloropropane (DBCP), MAY CAUSE CANCER.

(vi) The employer must prohibit the removal of DBCP from protective clothing and equipment by blowing or shaking.

(12) **Housekeeping**.

(a) Surfaces.

(i) All surfaces must be maintained free of accumulations of DBCP.

(ii) Dry sweeping and the use of air for the cleaning of floors and other surfaces where DBCP dust or liquids are found is prohibited.

(iii) Where vacuuming methods are selected, either portable units or a permanent system may be used.

(A) If a portable unit is selected, the exhaust must be attached to the general workplace exhaust ventilation system or collected within the vacuum unit, equipped with high efficiency filters or other appropriate means of contaminant removal, so that DBCP is not reintroduced into the workplace air; and

(B) Portable vacuum units used to collect DBCP may not be used for other cleaning purposes and must be labeled as prescribed by subsection (11)(b)(v) of this section.

(iv) Cleaning of floors and other contaminated surfaces may not be performed by washing down with a hose, unless a fine spray has first been laid down.

(b) Liquids. Where DBCP is present in a liquid form, or as a resultant vapor, all containers or vessels containing DBCP must be enclosed to the maximum extent feasible and tightly covered when not in use.

(c) Waste disposal. DBCP waste, scrap, debris, bags, containers or equipment, must be disposed in sealed bags or other closed containers which prevent dispersion of DBCP outside the container.

(13) **Hygiene facilities and practices**.

(a) Change rooms. The employer must provide clean change rooms equipped with storage facilities for street clothes and separate storage facilities for protective clothing and equipment whenever employees are required to wear protective clothing and equipment in accordance with subsections (8), (9), and (11) of this section.

(b) Showers.

(i) The employer must ensure that employees working in the regulated area shower at the end of the work shift.

(ii) The employer must ensure that employees whose skin becomes contaminated with DBCP-containing liquids or solids immediately wash or shower to remove any DBCP from the skin.

(iii) The employer must provide shower facilities in accordance with WAC 296-800-230.

(c) Lunchrooms. The employer must provide lunchroom facilities which have a temperature controlled, positive pressure, filtered air supply, and which are readily accessible to employees working in regulated areas.

(d) Lavatories.

(i) The employer must ensure that employees working in the regulated area remove protective clothing and wash their hands and face prior to eating.

(ii) The employer must provide a sufficient number of lavatory facilities which comply with WAC 296-800-230.

(e) Prohibition of activities in regulated areas. The employer must ensure that, in regulated areas, food or beverages are not present or consumed, smoking products and implements are not present or used, and cosmetics are not present or applied.

(14) **Medical surveillance**.

(a) General. The employer must institute a program of medical surveillance for each employee who is or will be exposed, without regard to the use of respirators, to DBCP. The employer must provide each such employee with an opportunity for medical examinations and tests in accordance with this subsection. All medical examinations and procedures shall be performed by or under the supervision of a licensed physician, and must be provided without cost to the employee.

(b) Frequency and content. At the time of initial assignment, annually thereafter, and whenever exposure to DBCP occurs, the employer must provide a medical examination for employees who work in regulated areas, which includes at least the following:

(i) A complete medical and occupational history with emphasis on reproductive history.

(ii) A complete physical examination with emphasis on the genito-urinary tract, testicle size, and body habitus including the following tests:

(A) Sperm count;

(B) Complete urinalysis (U/A);

(C) Complete blood count; and

(D) Thyroid profile.

(iii) A serum specimen must be obtained and the following determinations made by radioimmunoassay techniques utilizing National Institutes of Health (NIH) specific antigen or one of equivalent sensitivity:

(A) Serum multiphasic analysis (SMA 12);

(B) Serum follicle stimulating hormone (FSH);

(C) Serum luteinizing hormone (LH); and

(D) Serum estrogen (females).

(iv) Any other tests deemed appropriate by the examining physician.

(c) Additional examinations. If the employee for any reason develops signs or symptoms commonly associated with exposure to DBCP, the employer must provide the employee with a medical examination which must include those elements considered appropriate by the examining physician.

(d) Information provided to the physician. The employer must provide the following information to the examining physician:

(i) A copy of this standard and its appendices;

(ii) A description of the affected employee's duties as they relate to the employee's exposure;

(iii) The level of DBCP to which the employee is exposed; and

(iv) A description of any personal protective equipment used or to be used.

(e) Physician's written opinion.

(i) For each examination under this section, the employer must obtain and provide the employee with a written opinion from the examining physician which must include:

(A) The results of the medical tests performed;

(B) The physician's opinion as to whether the employee has any detected medical condition which would place the employee at an increased risk of material impairment of health from exposure to DBCP;

(C) Any recommended limitations upon the employee's exposure to DBCP or upon the use of protective clothing and equipment such as respirators; and

(D) A statement that the employee was informed by the physician of the results of the medical examination, and any medical conditions which require further examination or treatment.

(ii) The employer must instruct the physician not to reveal in the written opinion specific findings or diagnoses unrelated to occupational exposure to DBCP.

(iii) The employer must provide a copy of the written opinion to the affected employee.

(f) Emergency situations. If the employee is exposed to DBCP in an emergency situation, the employer must provide the employee with a sperm count test as soon as practicable, or, if the employee is unable to produce a semen specimen, the hormone tests contained in (b) of this subsection. The employer must provide these same tests three months later.

(15) **Employee information and training**.

(a) Training program.

(i) Within thirty days of the effective date of this standard, the employer must institute a training program for all employees who may be exposed to DBCP and must ensure their participation in such training program.

(ii) The employer must ensure that each employee is informed of the following:

(A) The information contained in Appendices A, B and C;

(B) The quantity, location, manner of use, release or storage of DBCP and the specific nature of operations which could result in exposure to DBCP as well as any necessary protective steps;

(C) The purpose, proper use, limitations, and other training requirements covering respiratory protection as required in chapter 296-842 WAC;

(D) The purpose and description of the medical surveillance program required by subsection (14) of this section; and

(E) A review of this standard.

(b) Access to training materials.

(i) The employer must make a copy of this standard and its appendices readily available to all affected employees.

(ii) The employer must provide, upon request, all materials relating to the employee information and training program to the director.

(16) **Communication of hazards**.

(a) Hazard communication-General.

(i) Chemical manufacturers, importers, distributors and employers must comply with all requirements of the Hazard Communication Standard (HCS), WAC 296-901-140 for DBCP.

(ii) In classifying the hazards of DBCP at least the following hazards are to be addressed: Cancer; reproductive effects; liver effects; kidney effects; central nervous system effects; skin, eye and respiratory tract irritation; and acute toxicity effects.

(iii) Employers must include DBCP in the hazard communication program established to comply with the HCS, WAC 296-901-140. Employers must ensure that each employee has access to labels on containers of DBCP and to safety data sheets, and is trained in accordance with the requirements of HCS and subsection (15) of this section.

(iv) The employer may use labels or signs required by other statutes, regulations, or ordinances in addition to or in combination with, signs and labels required by this subsection.

(v) The employer must ensure that no statement appears on or near any sign or label required by this subsection which contradicts or detracts from the required sign or label.

(b) Signs.

The employer must post signs to clearly indicate all regulated areas. These signs must bear the legend:

DANGER
1,2-Dibromo-3-chloropropane
MAY CAUSE CANCER
WEAR RESPIRATORY PROTECTION IN THIS AREA
AUTHORIZED PERSONNEL ONLY

(c) Labels.

(i) Where DBCP or products containing DBCP are sold, distributed or otherwise leave the employer's workplace bearing appropriate labels required by EPA under the regulations in 40 C.F.R. Part 162, the labels required by (c) of this subsection need not be affixed.

(ii) The employer must ensure that the precautionary labels required by (c) of this subsection are readily visible and legible.

(17) **Recordkeeping**.

(a) Exposure monitoring.

(i) The employer must establish and maintain an accurate record of all monitoring required by subsection (6) of this section.

(ii) This record must include:

(A) The dates, number, duration and results of each of the samples taken, including a description of the sampling procedure used to determine representative employee exposure;

(B) A description of the sampling and analytical methods used;

(C) Type of respiratory worn, if any; and

(D) Name, Social Security number, and job classification of the employee monitored and of all other employees whose exposure the measurement is intended to represent.

(iii) The employer must maintain this record for at least forty years or the duration of employment plus twenty years, whichever is longer.

(b) Medical surveillance.

(i) The employer must establish and maintain an accurate record for each employee subject to medical surveillance required by subsection (14) of this section.

(ii) This record must include:

(A) The name and Social Security number of the employee;

(B) A copy of the physician's written opinion;

(C) Any employee medical complaints related to exposure to DBCP;

(D) A copy of the information provided the physician as required by subsection (14)(c) of this section; and

(E) A copy of the employee's medical and work history.

(iii) The employer must maintain this record for at least forty years or the duration of employment plus twenty years, whichever is longer.

(c) Availability.

(i) The employer must ensure that all records required to be maintained by this section be made available upon request to the director for examination and copying.

(ii) Employee exposure monitoring records and employee medical records required by this subsection must be provided upon request to employees' designated representatives and the assistant director in accordance with chapter 296-802 WAC.

(d) Transfer of records.

(i) If the employer ceases to do business, the successor employer must receive and retain all records required to be maintained by this section for the prescribed period.

(ii) The employer must also comply with any additional requirements involving transfer of records set forth in WAC 296-802-60005.

(18) **Observation of monitoring**.

(a) Employee observation. The employer must provide affected employees, or their designated representatives, an opportunity to observe any monitoring of employee exposure to DBCP conducted under subsection (6) of this section.

(b) Observation procedures.

(i) Whenever observation of the measuring or monitoring of employee exposure to DBCP requires entry into an area where the use of protective clothing or equipment is required, the employer must provide the observer with personal protective clothing or equipment required to be worn by employees working in the area, ensure the use of such clothing and equipment, and require the observer to comply with all other applicable safety and health procedures.

(ii) Without interfering with the monitoring or measurement, observers shall be entitled to:

(A) Receive an explanation of the measurement procedures;

(B) Observe all steps related to the measurement of airborne concentrations of DBCP performed at the place of exposure; and

(C) Record the results obtained.

(19) **Appendices**. The information contained in the appendices is not intended, by itself, to create any additional obligations not otherwise imposed or to detract from any existing obligation.

WAC 296-62-07343 Appendix A--Substance safety data sheet for DBCP.

(1) **Substance identification**.

(a) Synonyms and trades names: DBCP; Dibromochloropropane; Fumazone (Dow Chemical Company TM); Nemafume; Nemagon (Shell Chemical Co. TM); Nemaset; BBC 12; and OS 1879.

(b) Permissible exposure:

(i) Airborne. 1 part DBCP vapor per billion parts of air (1 ppb); time-weighted average (TWA) for an eight-hour workday.

(ii) Dermal. Eye contact and skin contact with DBCP are prohibited.

(c) Appearance and odor: Technical grade DBCP is a dense yellow or amber liquid with a pungent odor. It may also appear in granular form, or blended in varying concentrations with other liquids.

(d) Uses: DBCP is used to control nematodes, very small worm-like plant parasites, on crops including cotton, soybeans, fruits, nuts, vegetables and ornamentals.

(2) **Health hazard data**.

(a) Routes of entry: Employees may be exposed:

(i) Through inhalation (breathing);

(ii) Through ingestion (swallowing);

(iii) Skin contact; and

(iv) Eye contact.

(b) Effects of exposure:

(i) Acute exposure. DBCP may cause drowsiness, irritation of the eyes, nose, throat and skin, nausea and vomiting. In addition, overexposure may cause damage to the lungs, liver or kidneys.

(ii) Chronic exposure. Prolonged or repeated exposure to DBCP has been shown to cause sterility in humans. It also has been shown to produce cancer and sterility in laboratory animals and has been determined to constitute an increased risk of cancer in people.

(iii) Reporting signs and symptoms. If you develop any of the above signs or symptoms that you think are caused by exposure to DBCP, you should inform your employer.

(3) **Emergency first-aid procedures**.

(a) Eye exposure. If DBCP liquid or dust containing DBCP gets into your eyes, wash your eyes immediately with large amounts of water, lifting the lower and upper lids occasionally. Get medical attention immediately. Contact lenses should not be worn when working with DBCP.

(b) Skin exposure. If DBCP liquids or dusts containing DBCP get on your skin, immediately wash using soap or mild detergent and water. If DBCP liquids or dusts containing DBCP penetrate through your clothing, remove the clothing immediately and wash. If irritation is present after washing get medical attention.

(c) Breathing. If you or any person breathe in large amounts of DBCP, move the exposed person to fresh air at once. If breathing has stopped, perform artificial respiration. Do not use mouth-to-mouth. Keep the affected person warm and at rest. Get medical attention as soon as possible.

(d) Swallowing. When DBCP has been swallowed and the person is conscious, give the person large amounts of water immediately. After the water has been swallowed, try to get the person to vomit by having them touch the back of their throat with their finger. Do not make an unconscious person vomit. Get medical attention immediately.

(e) Rescue. Notify someone. Put into effect the established emergency rescue procedures. Know the locations of the emergency rescue equipment before the need arises.

(4) **Respirators and protective clothing**.

(a) Respirators. You may be required to wear a respirator in emergencies and while your employer is in the process of reducing DBCP exposures through engineering controls. If respirators are worn, they must have a label issued by the National Institute for Occupational Safety and Health (NIOSH) under the provisions of 42 CFR part 84 stating that the respirators have been certified for use with organic vapors. For effective protection, a respirator must fit your face and head snugly. The respirator should not be loosened or removed in work situations where its use is required. Respirators must not be loosened or removed in work situations where their use is required.

(b) Protective clothing. When working with DBCP you must wear for your protection impermeable work clothing provided by your employer. (Standard rubber and neoprene protective clothing do not offer adequate protection). DBCP must never be allowed to remain on the skin. Clothing and shoes must not be allowed to become contaminated with DBCP, and if they do, they must be promptly removed and not worn again until completely free of DBCP. Turn in impermeable clothing that has developed leaks for repair or replacement.

(c) Eye protection. You must wear splashproof safety goggles where there is any possibility of DBCP liquid or dust contacting your eyes.

(5) **Precautions for safe use, handling, and storage**.

(a) DBCP must be stored in tightly closed containers in a cool, well-ventilated area.

(b) If your work clothing may have become contaminated with DBCP, or liquids or dusts containing DBCP, you must change into uncontaminated clothing before leaving the work premises.

(c) You must promptly remove any protective clothing that becomes contaminated with DBCP. This clothing must not be reworn until the DBCP is removed from the clothing.

(d) If your skin becomes contaminated with DBCP, you must immediately and thoroughly wash or shower with soap or mild detergent and water to remove any DBCP from your skin.

(e) You must not keep food, beverages, cosmetics, or smoking materials, nor eat or smoke, in regulated areas.

(f) If you work in a regulated area, you must wash your hands thoroughly with soap or mild detergent and water, before eating, smoking or using toilet facilities.

(g) If you work in a regulated area, you must remove any protective equipment or clothing before leaving the regulated area.

(h) Ask your supervisor where DBCP is used in your work area and for any additional safety and health rules.

(6) **Access to information**.

(a) Each year, your employer is required to inform you of the information contained in this substance safety data sheet for DBCP. In addition, your employer must instruct you in the safe use of DBCP, emergency procedures, and the correct use of protective equipment.

(b) Your employer is required to determine whether you are being exposed to DBCP. You or your representative have the right to observe employee exposure measurements and to record the result obtained. Your employer is required to inform you of your exposure. If your employer determines that you are being overexposed, they are required to inform you of the actions which are being taken to reduce your exposure.

(c) Your employer is required to keep records of your exposure and medical examinations. Your employer is required to keep exposure and medical data for at least forty years or the duration of your employment plus twenty years, whichever is longer.

(d) Your employer is required to release exposure and medical records to you, your physician, or other individual designated by you upon your written request.

WAC 296-62-07344 Appendix B--Substance technical guidelines for DBCP.

(1) **Physical and chemical data**.

(a) Substance identification.

(i) Synonyms: 1,2-dibromo-3-chloropropane; DBCP, Fumazone; Nemafume; Nemagon; Nemaset; BBC 12; OS 1879. DBCP is also included in agricultural pesticides and fumigants which include the phrase "Nema____, in their name.

(ii) Formula: $C_3H_5Br_2$ C_1.

(iii) Molecular weight: 236.

(b) Physical data:

(i) Boiling point (760 mm HG): 195C (383F)

(ii) Specific gravity (water = 1): 2.093.

(iii) Vapor density (air = 1 at boiling point of DBCP): Data not available.

(iv) Melting point: 6C (43F).

(v) Vapor pressure at 20C (68F): 0.8 mm HG

(vi) Solubility in water: 1000 ppm.

(vii) Evaporation rate (Butyl Acetate = 1): Very much less than 1.

(c) Appearance and odor: Dense yellow or amber liquid with a pungent odor at high concentrations. Any detectable odor of DBCP indicates overexposure.

(2) **Fire explosion and reactivity hazard data**.

(a) Fire.

(i) Flash point: 170F (77C)

(ii) Autoignition temperature: Data not available.

(iii) Flammable limits in air, percent by volume: Data not available.

(iv) Extinguishing media: Carbon dioxide, dry chemical.

(v) Special fire-fighting procedures: Do not use a solid stream of water since a stream will scatter and spread the fire. Use water spray to cool containers exposed to a fire.

(vi) Unusual fire and explosion hazards: None known.

(vii) For purposes of complying with the requirements of WAC 296-24-330, liquid DBCP is classified as a Class III A combustible liquid.

(viii) For the purpose of complying with chapter 296-24 WAC Part L, the classification of hazardous locations as described in article 500 of the National Electrical Code for DBCP shall be Class I, Group D.

(ix) For the purpose of compliance with WAC 296-24-592, DBCP is classified as a Class B fire hazard.

(x) For the purpose of compliance with WAC 296-24-230, locations classified as hazardous locations due to the presence of DBCP shall be Class I, Group D.

(xi) Sources of ignition are prohibited where DBCP presents a fire or explosion hazard.

(b) Reactivity.

(i) Conditions contributing to instability: None known.

(ii) Incompatibilities: Reacts with chemically active metals, such as aluminum, magnesium and tin alloys.

(iii) Hazardous decomposition products: Toxic gases and vapors (such as HBr, HC1 and carbon monoxide) may be released in a fire involving DBCP.

(iv) Special precautions: DBCP will attack some rubber materials and coatings.

(3) **Spill, leak and disposal procedures**.

(a) If DBCP is spilled or leaked, the following steps should be taken:

(i) The area should be evacuated at once and re-entered only after thorough ventilation.

(ii) Ventilate area of spill or leak.

(iii) If in liquid form, collect for reclamation or absorb in paper, vermiculite, dry sand, earth or similar material.

(iv) If in solid form, collect spilled material in the most convenient and safe manner for reclamation or for disposal.

(b) Persons not wearing protective equipment must be restricted from areas of spills or leaks until cleanup has been completed.

(c) Waste disposal methods:

(i) For small quantities of liquid DBCP, absorb on paper towels, remove to a safe place (such as a fume hood) and burn the paper. Large quantities can be reclaimed or collected and atomized in a suitable combustion chamber equipped with an appropriate effluent gas cleaning device. If liquid DBCP is absorbed in vermiculite, dry sand, earth or similar material and placed in sealed containers it may be disposed of in a state-approved sanitary landfill.

(ii) If in solid form, for small quantities, place on paper towels, remove to a safe place (such as a fume hood) and burn. Large quantities may be reclaimed. However, if this is not practical, dissolve in a flammable solvent (such as alcohol) and atomize in a suitable combustion chamber equipped with an appropriate effluent gas cleaning device. DBCP in solid form may also be disposed in a state-approved sanitary landfill.

(4) **Monitoring and measurement procedures**.

(a) Exposure above the permissible exposure limit.

(i) Eight hour exposure evaluation: Measurements taken for the purpose of determining employee exposure under this section are best taken so that the average eight-hour exposure may be determined from a single eight-hour sample or two four-hour samples. Air samples should be taken in the employee's breathing zone (air that would most nearly represent that inhaled by the employee).

(ii) Monitoring techniques: The sampling and analysis under this section may be performed by collecting the DBCP vapor on petroleum based charcoal absorption tubes with subsequent chemical analyses. The method of measurement chosen should determine the concentration of airborne DBCP at the permissible exposure limit to an accuracy of plus or minus twenty-five percent. If charcoal tubes are used, a total volume of ten liters should be collected at a flow rate of 50 cc per minute for each tube. Analyze the resultant samples as you would samples of halogenated solvent.

(b) Since many of the duties relating to employee protection are dependent on the results of monitoring and measuring procedures, employers should assure that the evaluation of employee exposures is performed by a competent industrial hygienist or other technically qualified person.

(5) **Protective clothing**. Employees should be required to wear appropriate protective clothing to prevent any possibility of skin contact with DBCP. Because DBCP is absorbed through the skin, it is important to prevent skin contact with both liquid and solid forms of DBCP. Protective clothing should include impermeable coveralls or similar full body work clothing, gloves, headcoverings, and workshoes or shoe coverings. Standard rubber and neoprene gloves do not offer adequate protection and should not be relied upon to keep DBCP off the skin. DBCP should never be allowed to remain on the skin. Clothing and shoes should not be allowed to become contaminated with the material; and if they do, they should be promptly removed and not worn again until completely free of the material. Any protective clothing which has developed leaks or is otherwise found to be defective should be repaired or replaced. Employees should also be required to wear splashproof safety goggles where there is any possibility of DBCP contacting the eyes.

(6) **Housekeeping and hygiene facilities**.

(a) The workplace must be kept clean, orderly and in a sanitary condition.

(b) Dry sweeping and the use of compressed air is unsafe for the cleaning of floors and other surfaces where DBCP dust or liquids are found. To minimize the contamination of air with dust, vacuuming with either portable or permanent systems must be used. If a portable unit is selected, the exhaust must be attached to the general workplace exhaust ventilation system, or collected within the vacuum unit equipped with high efficiency filters or other appropriate means of contamination removal and not used for other purposes. Units used to collect DBCP must be labeled.

(c) Adequate washing facilities with hot and cold water must be provided, and maintained in a sanitary condition. Suitable cleansing agents should also be provided to assure the effective removal of DBCP from the skin.

(d) Change or dressing rooms with individual clothes storage facilities must be provided to prevent the contamination of street clothes with DBCP. Because of the hazardous nature of DBCP, contaminated protective clothing must be stored in closed containers for cleaning or disposal.

(7) **Miscellaneous precautions**.

(a) Store DBCP in tightly closed containers in a cool, well-ventilated area.

(b) Use of supplied-air suits or other impervious clothing (such as acid suits) may be necessary to prevent skin contact with DBCP. Supplied-air suits should be selected, used, and maintained under the supervision of persons knowledgeable in the limitations and potential life-endangering characteristics of supplied-air suits.

(c) The use of air-conditioned suits may be necessary in warmer climates.

(d) Advise employees of all areas and operations where exposure to DBCP could occur.

(8) **Common operations**. Common operations in which exposure to DBCP is likely to occur are: During its production; and during its formulation into pesticides and fumigants.

WAC 296-62-07346 Appendix C--Medical surveillance guidelines for DBCP.

(1) **Route of entry**.

(a) Inhalation;

(b) Skin absorption.

(2) **Toxicology**. Recent data collected on workers involved in the manufacture and formulation of DBCP has shown that DBCP can cause sterility at very low levels of exposure. This finding is supported by studies showing that DBCP causes sterility in animals. Chronic exposure to DBCP resulted in pronounced necrotic action on the parenchymatous organs (i.e., liver, kidney, spleen) and on the testicles of rats at concentrations as low as 5 ppm. Rats that were chronically exposed to DBCP also showed changes in the composition of the blood, showing low RBC, hemoglobin, and WBC, and high reticulocyte levels as well as functional hepatic disturbance, manifesting itself in a long prothrombin time. Reznik et al., noted a single dose of 100 mg produced profound depression of the nervous system of rats. Their condition gradually improved.

Acute exposure also resulted in the destruction of the sex gland activity of male rats as well as causing changes in the estrous cycle in female rats. Animal studies have also associated DBCP with an increased incidence of carcinoma. Olson, et al., orally administered DBCP to rats and mice five times per week at experimentally predetermined maximally tolerated doses and at half those doses. As early as ten weeks after initiation of treatment, DBCP induced a high incidence of squamous cell carcinomas of the stomach with metastases in both species. DBCP also induced mammary adenocarcinomas in the female rats at both dose levels.

(3) **Signs and symptoms**.

(a) Inhalation: Nausea, eye irritation, conjunctivitis, respiratory irritation, pulmonary congestion or edema, CNS depression with apathy, sluggishness, and ataxia.

(b) Dermal: Erythema or inflammation and dermatitis on repeated exposure.

(4) **Special tests**.

(a) Semen analysis: The following information excerpted from the document "Evaluation of Testicular Function," submitted by the Corporate Medical Department of the Shell Oil Company (exhibit 39-3), may be useful to physicians conducting the medical surveillance program. In performing semen analyses certain minimal but specific criteria should be met:

(i) It is recommended that a minimum of three valid semen analyses be obtained in order to make a determination of an individual's average sperm count.

(ii) A period of sexual abstinence is necessary prior to the collection of each masturbatory sample. It is recommended that intercourse or masturbation be performed 48 hours before the actual specimen collection. A period of 48 hours of abstinence would follow; then the masturbatory sample would be collected.

(iii) Each semen specimen should be collected in a clean, wide mouthed, glass jar (not necessarily pre-sterilized) in a manner designated by the examining physician. Any part of the seminal fluid exam should be initialed only after liquifaction is complete, i.e., 30 to 45 minutes after collection.

(iv) Semen volume should be measured to the nearest 1/10 of a cubic centimeter.

(v) Sperm density should be determined using routine techniques involving the use of a white cell pipette and a hemocytometer chamber. The immobilizing fluid most effective and most easily obtained for this process is distilled water.

(vi) Thin, dry smears of the semen should be made for a morphologic classification of the sperm forms and should be stained with either hematoxalin or the more difficult, yet more precise, Papanicolaou technique. Also of importance to record is obvious sperm agglutination, pyospermia, delayed liquifaction (greater than 30 minutes), and hyperviscosity. In addition, pH, using nitrazine paper, should be determined.

(vii) A total morphology evaluation should include percentages of the following:

(A) Normal (oval) forms,

(B) Tapered forms,

(C) Amorphous forms (include large and small sperm shapes),

(D) Duplicated (either heads or tails) forms, and

(E) Immature forms.

(viii) Each sample should be evaluated for sperm viability (percent viable sperm moving at the time of examination) as well as sperm motility (subjective characterization of "purposeful forward sperm progression" of the majority of those viable sperm analyzed) within two hours after collection, ideally by the same or equally qualified examiner.

(b) Serum determinations: The following serum determinations should be performed by radiommuno-assay techniques using National Institutes of Health (NIH) specific antigen or antigen preparations of equivalent sensitivity:

(i) Serum follicle stimulating hormone (FSH),

(ii) Serum luteinizing hormone (LH), and

(iii) Serum total estrogen (females only).

(5) **Treatment**. Remove from exposure immediately, give oxygen or artificial resuscitation if indicated. Contaminated clothing and shoes should be removed immediately. Flush eyes and wash contaminated skin. If swallowed and the person is conscious, induce vomiting. Recovery from mild exposures is usually rapid and complete.

(6) **Surveillance and preventive considerations**.

(a) Other considerations. DBCP can cause both acute and chronic effects. It is important that the physician become familiar with the operating conditions in which exposure to DBCP occurs. Those with respiratory disorders may not tolerate the wearing of negative pressure respirators.

(b) Surveillance and screening. Medical histories and laboratory examinations are required for each employee subject to exposure to DBCP. The employer should screen employees for history of certain medical conditions (listed below) which might place the employee at increased risk from exposure:

(i) Liver disease. The primary site of biotransformation and detoxification of DBCP is the liver. Liver dysfunctions likely to inhibit the conjugation reactions will tend to promote the toxic actions of DBCP. These precautions should be considered before exposing persons with impaired liver function to DBCP.

(ii) Renal disease. Because DBCP has been associated with injury to the kidney it is important that special consideration be given to those with possible impairment of renal function.

(iii) Skin disease. DBCP can penetrate the skin and can cause erythema on prolonged exposure. Persons with pre-existing skin disorders may be more susceptible to the effects of DBCP.

(iv) Blood dyscrasias. DBCP has been shown to decrease the content of erythrocytes, hemoglobin, and leukocytes in the blood, as well as increase the prothrombin time. Persons with existing blood disorders may be more susceptible to the effects of DBCP.

(v) Reproductive disorders. Animal studies have associated DBCP with various effects on the reproductive organs. Among these effects are atrophy of the testicles and changes in the estrous cycle. Persons with pre-existing reproductive disorders may be at increased risk to these effects of DBCP.

(7) **References**.

(a) Reznik, Ya. B. and Sprinchan, G. K.: Experimental Data on the Gonadotoxic effect of Nemagon, Gig. Sanit., (6), 1975, pp. 101-102, (translated from Russian).

(b) Faydysh, E. V., Rakhmatullaev, N. N. and Varshavskii, V. A.: The Cytotoxic Action of Nemagon in a Subacute Experiment, Med. Zh. Uzbekistana, (No. 1), 1970, pp. 64-65, (translated from Russian).

(c) Rakhmatullaev, N. N.: Hygienic Characteristics of the Nematocide Nemagon in Relation to Water Pollution Control, Hyg. Sanit., 36(3), 1971, pp. 344-348, (translated from Russian).

(d) Olson, W. A. et al.: Induction of Stomach Cancer in Rats and Mice by Halogenated Aliphatic Fumigants, Journal of the National Cancer Institute, (51), 1973, pp. 1993-1995.

(e) Torkelson, T. R. et al.: Toxicologic Investigations of 1,2-Dibromo-3-chloropropane, Toxicology and Applied Pharmacology, 3, 1961 pp. 545-559.

WAC 296-62-07355 Ethylene oxide. Scope and application.

> *Note: The requirements in WAC 296-62-07355 through 296-62-07386 apply only to agriculture. The requirements for all other industries relating to ethylene oxide have been moved to chapter 296-855 WAC, Ethylene oxide.*

(1) WAC 296-62-07355 through 296-62-07389 applies to all occupational exposures to ethylene oxide (EtO), Chemical Abstracts Service Registry No. 75-21-8, except as provided in subsection (2) of this section.

(2) WAC 296-62-07355 through 296-62-07389 does not apply to the processing, use, or handling of products containing EtO where objective data are reasonably relied upon that demonstrate that the product is not capable of releasing EtO in airborne concentrations at or above the action level, and may not reasonably be foreseen to release EtO in excess of the excursion limit, under the expected conditions of processing, use, or handling that will cause the greatest possible release.

(3) Where products containing EtO are exempted under subsection (2) of this section, the employer must maintain records of the objective data supporting that exemption and the basis for the employer's reliance on the data, as provided in WAC 296-62-07375(1).

WAC 296-62-07357 Definitions.

For the purpose of WAC 296-62-07355 through 296-62-07389, the following definitions shall apply:

Action level. A concentration of airborne EtO of 0.5 ppm calculated as an eight-hour time-weighted average.

Authorized person. Any person specifically authorized by the employer whose duties require the person to enter a regulated area, or any person entering such an area as a designated representative of employees for the purpose of exercising the right to observe monitoring and measuring procedures under WAC 296-62-07377, or any other person authorized by chapter 49.17 RCW or regulations issued under chapter 49.17 RCW.

Director. The director of the department of labor and industries, or designee.

Emergency. Any occurrence such as, but not limited to, equipment failure, rupture of containers, or failure of control equipment that is likely to or does result in an unexpected significant release of EtO.

Employee exposure. Exposure to airborne EtO which would occur if the employee were not using respiratory protective equipment.

Ethylene oxide or **EtO**. The three-membered ring organic compound with chemical formula C_2H_4O.

WAC 296-62-07359 Permissible exposure limits (PEL).

(1) **Eight-hour time-weighted average (TWA)**. The employer must ensure that no employee is exposed to an airborne concentration of EtO in excess of one part EtO per million parts of air (1 ppm) as an eight-hour time-weighted average. (Eight-hour TWA.)

(2) **Excursion limit**. The employer must ensure that no employee is exposed to an airborne concentration of EtO in excess of five parts of EtO per million parts of air (5 ppm) as averaged over a sampling period of fifteen minutes.

WAC 296-62-07361 Exposure monitoring.

(1) **General**.

(a) Determinations of employee exposure must be made from breathing zone air samples that are representative of the eight-hour TWA and fifteen-minute short-term exposures of each employee.

(b) Representative eight-hour TWA employee exposure must be determined on the basis of one or more samples representing full-shift exposure for each shift for each job classification in each work area. Representative fifteen-minute short-term employee exposures must be determined on the basis of one or more samples representing fifteen-minute exposures associated with operations that are most likely to produce exposures above the excursion limit for each shift for each job classification in each work area.

(c) Where the employer can document that exposure levels are equivalent for similar operations in different work shifts, the employer need only determine representative employee exposure for that operation during one shift.

(2) **Initial monitoring**.

(a) Each employer who has a workplace or work operation covered by WAC 296-62-07355 through 296-62-07389, except as provided in WAC 296-62-07355(2) or (b) of this subsection, must perform initial monitoring to determine accurately the airborne concentrations of EtO to which employees may be exposed.

(b) Where the employer has monitored after June 15, 1983, and the monitoring satisfies all other requirements of WAC 296-62-07355 through 296-62-07389, the employer may rely on such earlier monitoring results to satisfy the requirements of (a) of this subsection.

(c) Where the employer has previously monitored for the excursion limit and the monitoring satisfies all other requirements of this section, the employer may rely on such earlier monitoring results to satisfy the requirements of (a) of this subsection.

(3) **Monitoring frequency (periodic monitoring)**.

(a) If the monitoring required by subsection (2) of this section reveals employee exposure at or above the action level but at or below the eight-hour TWA, the employer must repeat such monitoring for each such employee at least every six months.

(b) If the monitoring required by subsection (2)(a) of this section reveals employee exposure above the eight-hour TWA, the employer must repeat such monitoring for each such employee at least every three months.

(c) The employer may alter the monitoring schedule from quarterly to semiannually for any employee for whom two consecutive measurements taken at least seven days apart indicate that the employee's exposure has decreased to or below the eight-hour TWA.

(d) If the monitoring required by subsection (2)(a) of this section reveals employee exposure above the fifteen-minute excursion limit, the employer shall repeat such monitoring for each such employee at least every three months, and more often as necessary to evaluate the employee's short-term exposures.

(4) **Termination of monitoring**.

(a) If the initial monitoring required by subsection (2)(a) of this section reveals employee exposure to be below the action level, the employer may discontinue TWA monitoring for those employees whose exposures are represented by the initial monitoring.

(b) If the periodic monitoring required by subsection (3) of this section reveals that employee exposures, as indicated by at least two consecutive measurements taken at least seven days apart, are below the action level, the employer may discontinue TWA monitoring for those employees whose exposures are represented by such monitoring.

(c) If the initial monitoring required by subsection (2)(a) of this section reveals the employee exposure to be at or below the excursion limit, the employer may discontinue excursion limit monitoring for those employees whose exposures are represented by the initial monitoring.

(d) If the periodic monitoring required by subsection (3) of this section reveals that employee exposures, as indicated by at least two consecutive measurements taken at least seven days apart, are at or below the excursion limit, the employer may discontinue excursion limit monitoring for those employees whose exposures are represented by such monitoring.

(5) **Additional monitoring**. Notwithstanding the provisions of subsection (4) of this section, the employer must institute the exposure monitoring required under subsections (2)(a) and (3) of this section whenever there has been a change in the production, process, control equipment, personnel or work-practices that may result in new or additional exposures to EtO or when the employer has any reason to suspect that a change may result in new or additional exposures.

(6) **Accuracy of monitoring**.

(a) Monitoring must be accurate, to a confidence level of ninety-five percent, to within plus or minus twenty-five percent for airborne concentrations of EtO at the 1 ppm TWA and to within plus or minus thirty-five percent for airborne concentrations of EtO at the action level of 0.5 ppm.

(b) Monitoring must be accurate, to a confidence level of ninety-five percent, to within plus or minus thirty-five percent for airborne concentrations of EtO at the excursion limit.

(7) **Employee notification of monitoring results**.

(a) The employer must, within fifteen working days after the receipt of the results of any monitoring performed under WAC 296-62-07355 through 296-62-07389, notify the affected employee of these results in writing either individually or by posting of results in an appropriate location that is accessible to affected employees.

(b) The written notification required by (a) of this subsection must contain the corrective action being taken by the employer to reduce employee exposure to or below the TWA and/or excursion limit, wherever monitoring results indicated that the TWA and/or excursion limit has been exceeded.

WAC 296-62-07363 Regulated areas.

(1) The employer must establish a regulated area wherever occupational exposures to airborne concentrations of EtO may exceed the TWA or wherever the EtO concentration exceeds or can reasonably be expected to exceed the excursion limit.

(2) Access to regulated areas must be limited to authorized persons.

(3) Regulated areas must be demarcated in any manner that minimizes the number of employees within the regulated area.

WAC 296-62-07365 Methods of compliance.

(1) **Engineering controls and work-practices**.

(a) The employer must institute engineering controls and work-practices to reduce and maintain employee exposure to or below the TWA and to or below the excursion limit, except to the extent that such controls are not feasible.

(b) Wherever the feasible engineering controls and work-practices that can be instituted are not sufficient to reduce employee exposure to or below the TWA and to or below the excursion limit, the employer must use them to reduce employee exposure to the lowest levels achievable by these controls and must supplement them by the use of respiratory protection that complies with the requirements of WAC 296-62-07367.

(c) Engineering controls are generally infeasible for the following operations: Collection of quality assurance sampling from sterilized materials removal of biological indicators from sterilized materials: Loading and unloading of tank cars; changing of ethylene oxide tanks on sterilizers; and vessel cleaning. For these operations, engineering controls are required only where the director demonstrates that such controls are feasible.

(2) **Compliance program**.

(a) Where the TWA or excursion limit is exceeded, the employer must establish and implement a written program to reduce employee exposure to or below the TWA and to or below the excursion limit by means of engineering and work-practice controls, as required by subsection (1) of this section, and by the use of respiratory protection where required or permitted under WAC 296-62-07355 through 296-62-07389.

(b) The compliance program must include a schedule for periodic leak detection surveys and a written plan for emergency situations, as specified in WAC 296-62-07369 (1)(a).

(c) Written plans for a program required in this subsection must be developed and furnished upon request for examination and copying to the director, affected employees and designated employee representatives. Such plans must be reviewed at least every twelve months, and must be updated as necessary to reflect significant changes in the status of the employer's compliance program.

(d) The employer must not implement a schedule of employee rotation as a means of compliance with the TWA or excursion limit.

WAC 296-62-07367 Respiratory protection and personal protective equipment.

(1) **General**. For employees who use respirators required by this section, the employer must provide respirators that comply with the requirements of WAC 296-62-07355 through 296-62-07389. Respirators must be used during:

(a) Periods necessary to install or implement feasible engineering and work-practice controls;

(b) Work operations, such as maintenance and repair activities, vessel cleaning, or other activities, for which engineering and work-practice controls are not feasible;

(c) Work operations for which feasible engineering and work-practice controls are not yet sufficient to reduce employee exposure to or below the TWA or excursion limit;

(d) Emergencies.

(2) **Respirator program**. The employer must establish, implement, and maintain a respiratory protection program as required in chapter 296-842 WAC, except WAC 296-842-13005 and 296-842-14005.

(3) **Respirator selection**. The employer must select the appropriate respirator from Table 1 of this section.

Table 1.-Minimum Requirements for Respiratory Protection for Airborne EtO	
Condition of use or concentration of airborne EtO (ppm)	**Minimum required respirator**
Equal to or less than 50	(a) Full facepiece respirator with EtO approved canister, front-or back-mounted.
Equal to or less than 2,000	(a) Positive-pressure supplied-air respirator, equipped with full facepiece, hood or helmet, or
	(b) Continuous-flow supplied-air respirator (positive pressure) equipped with hood, helmet or suit.
Concentration above 2,000 or unknown concentration (such as in emergencies)	(a) Positive-pressure self-contained breathing apparatus (SCBA), equipped with full facepiece, or (b) Positive-pressure full facepiece supplied-air respirator equipped with an auxiliary positive-pressure self-contained breathing apparatus.
Firefighting	(a) Positive-pressure self-contained breathing apparatus equipped with full facepiece.
Escape	(a) Any respirator described above.

Note: Respirators approved for use in higher concentrations are permitted to be used in lower concentrations.

(4) **Protective clothing and equipment**. Where employees could have eye or skin contact with EtO or EtO solutions, the employer must select and provide, at no cost to the employee, appropriate protective clothing or other equipment in accordance with WAC 296-800-160, and to protect any area of the body that may come in contact with liquid EtO or EtO in solution, and must ensure that the employee wears the protective clothing and equipment provided.

WAC 296-62-07369 Emergency situations.

(1) **Written plan**.

(a) A written plan for emergency situations must be developed for each workplace where there is a possibility of an emergency. Appropriate portions of the plan must be implemented in the event of an emergency.

(b) The plan must specifically provide that employees engaged in correcting emergency conditions must be equipped with respiratory protection as required by WAC 296-62-07367 until the emergency is abated.

(c) The plan must include the elements prescribed in WAC 296-24-567, "Employee emergency plans and fire prevention plans."

(2) **Alerting employees**. Where there is a possibility of employee exposure to EtO due to an emergency, means must be developed to alert potentially affected employees of such occurrences promptly. Affected employees must be immediately evacuated from the area in the event that an emergency occurs.

WAC 296-62-07371 Medical surveillance.

(1) **General**.

(a) Employees covered.

(i) The employer must institute a medical surveillance program for all employees who are or may be exposed to EtO at or above the action level, without regard to the use of respirators, for at least thirty days a year.

(ii) The employer must make available medical examinations and consultations to all employees who have been exposed to EtO in an emergency situation.

(b) Examination by a physician. The employer must ensure that all medical examinations and procedures are performed by or under the supervision of a licensed physician, and are provided without cost to the employee, without loss of pay, and at a reasonable time and place.

(2) **Medical examinations and consultations**.

(a) Frequency. The employer must make available medical examinations and consultations to each employee covered under subsection (1)(a) of this section on the following schedules:

(i) Prior to assignment of the employee to an area where exposure may be at or above the action level for at least thirty days a year.

(ii) At least annually each employee exposed at or above the action level for at least thirty days in the past year.

(iii) At termination of employment or reassignment to an area where exposure to EtO is not at or above the action level for at least thirty days a year.

(iv) As medically appropriate for any employee exposed during an emergency.

(v) As soon as possible, upon notification by an employee either (A) that the employee has developed signs or symptoms indicating possible overexposure to EtO, or (B) that the employee desires medical advice concerning the effects of current or past exposure to EtO on the employee's ability to produce a healthy child.

(vi) If the examining physician determines that any of the examinations should be provided more frequently than specified, the employer must provide such examinations to affected employees at the frequencies recommended by the physician.

(b) Content

(i) Medical examinations made available pursuant to (a)(i) through (iv) of this subsection must include:

(A) A medical and work history with special emphasis directed to symptoms related to the pulmonary, hematologic, neurologic, and reproductive systems and to the eyes and skin.

(B) A physical examination with particular emphasis given to the pulmonary, hematologic, neurologic, and reproductive systems and to the eyes and skin.

(C) A complete blood count to include at least a white cell count (including differential cell count), red cell count, hematocrit, and hemoglobin.

(D) Any laboratory or other test which the examining physician deems necessary by sound medical practice.

(ii) The content of medical examinations or consultation made available pursuant to (a)(i)(v) of this subsection shall be determined by the examining physician, and shall include pregnancy testing or laboratory evaluation of fertility, if requested by the employee and deemed appropriate by the physician.

(3) **Information provided to the physician**. The employer must provide the following information to the examining physician:

(a) A copy of WAC 296-62-07355 through 296-62-07389.

(b) A description of the affected employee's duties as they relate to the employee's exposure.

(c) The employee's representative exposure level or anticipated exposure level.

(d) A description of any personal protective and respiratory equipment used or to be used.

(e) Information from previous medical examinations of the affected employee that is not otherwise available to the examining physician.

(4) **Physician's written opinion**.

(a) The employer must obtain a written opinion from the examining physician. This written opinion must contain the results of the medical examination and must include:

(i) The physician's opinion as to whether the employee has any detected medical conditions that would place the employee at an increased risk of material health impairment from exposure to EtO;

(ii) Any recommended limitations on the employee or upon the use of personal protective equipment such as clothing or respirators; and

(iii) A statement that the employee has been informed by the physician of the results of the medical examination and of any medical conditions resulting from EtO exposure that require further explanation or treatment.

(b) The employer must instruct the physician not to reveal in the written opinion given to the employer specific findings or diagnoses unrelated to occupational exposure to EtO.

(c) The employer must provide a copy of the physician's written opinion to the affected employee within fifteen days from its receipt.

WAC 296-62-07373 Communication of EtO hazards.

(1) **Hazard communication-General**.

(a) Chemical manufacturers, importers, distributors and employers must comply with all requirements of the Hazard Communication Standard (HCS), WAC 296-901-140 for EtO.

(b) In classifying the hazards of EtO at least the following hazards are to be addressed: Cancer; reproductive effects; mutagenicity; central nervous system; skin sensitization; skin, eye and respiratory tract irritation; acute toxicity effects; and flammability.

(c) Employers must include EtO in the hazard communication program established to comply with the HCS, WAC 296-901-140. Employers must ensure that each employee has access to labels on containers of EtO and to safety data sheets, and is trained in accordance with the requirements of HCS and WAC 296-855-20090.

(2) **Signs and labels**.

(a) Signs.

The employer must post and maintain legible signs demarcating regulated areas and entrances or accessways to regulated areas that bear the following legend:

DANGER
ETHYLENE OXIDE
MAY CAUSE CANCER
MAY DAMAGE FERTILITY OR THE UNBORN CHILD
RESPIRATORY PROTECTION AND PROTECTIVE CLOTHING
MAY BE REQUIRED IN THIS AREA
AUTHORIZED PERSONNEL ONLY

(b) Labels

The employer must ensure that labels are affixed to all containers of EtO whose contents are capable of causing employee exposure at or above the action level or whose contents may reasonably be foreseen to cause employee exposure above the excursion limit, and that the labels remain affixed when the containers of EtO leave the workplace. For the purpose of this subsection, reaction vessels, storage tanks, and pipes or piping systems are not considered to be containers.

(c) The details of the hazard communication program developed by the employer, including an explanation of the labeling system and how employees can obtain and use the appropriate hazard information.

(3) **Safety data sheets**. Employers who are manufacturers or importers of EtO must comply with the requirements regarding development of safety data sheets as specified in WAC 296-901-14014 of the Hazard Communication Standard.

(4) **Information and training**.

(a) The employer must provide employees who are potentially exposed to EtO at or above the action level or above the excursion limit with information and training on EtO at the time of initial assignment and at least annually thereafter.

(b) Employees must be informed of the following:

(i) The requirements of WAC 296-62-07353 through 296-62-07389 with an explanation of its contents, including Appendices A and B;

(ii) Any operations in their work area where EtO is present;

(iii) The location and availability of the written EtO final rule; and

(iv) The medical surveillance program required by WAC 296-62-07371 with an explanation of the information in Appendix C.

(c) Employee training must include at least:

(i) Methods and observations that may be used to detect the presence or release of EtO in the work area (such as monitoring conducted by the employer, continuous monitoring devices, etc.);

(ii) The physical and health hazards of EtO;

(iii) The measures employees can take to protect themselves from hazards associated with EtO exposure, including specific procedures the employer has implemented to protect employees from exposure to EtO, such as work-practices, emergency procedures, and personal protective equipment to be used; and

(iv) The details of the hazard communication program developed by the employer, including an explanation of the labeling system and how employees can obtain and use the appropriate hazard information.

WAC 296-62-07375 Recordkeeping.

(1) **Objective data for exempted operations**.

(a) Where the processing, use, or handling of products made from or containing EtO are exempted from other requirements of WAC 296-62-07355 through 296-62-07389 under WAC 296-62-07355, or where objective data have been relied on in lieu of initial monitoring under WAC 296-62-07361 (2)(b), the employer must establish and maintain an accurate record of objective data reasonably relied upon in support of the exemption.

(b) This record must include at least the following information:

(i) The product qualifying for exemption;

(ii) The source of the objective data;

(iii) The testing protocol, results of testing, and/or analysis of the material for the release of EtO;

(iv) A description of the operation exempted and how the data support the exemption; and

(v) Other data relevant to the operations, materials, processing, or employee exposures covered by the exemption.

(c) The employer must maintain this record for the duration of the employer's reliance upon such objective data.

(2) **Exposure measurements**.

(a) The employer must keep an accurate record of all measurements taken to monitor employee exposure to EtO as prescribed in WAC 296-62-07361.

(b) This record must include at least the following information:

(i) The date of measurement;

(ii) The operation involving exposure to EtO which is being monitored;

(iii) Sampling and analytical methods used and evidence of their accuracy;

(iv) Number, duration, and results of samples taken;

(v) Type of protective devices worn, if any; and

(vi) Name, Social Security number and exposure of the employees whose exposures are represented.

(c) The employer must maintain this record for at least thirty years, in accordance with chapter 296-802 WAC.

(3) **Medical surveillance**.

(a) The employer must establish and maintain an accurate record for each employee subject to medical surveillance by WAC 296-62-07371 (1)(a), in accordance with chapter 296-802 WAC.

(b) The record must include at least the following information:

(i) The name and Social Security number of the employee;

(ii) Physicians' written opinions;

(iii) Any employee medical complaints related to exposure to EtO; and

(iv) A copy of the information provided to the physician as required by WAC 296-62-07371(3).

(c) The employer must ensure that this record is maintained for the duration of employment plus thirty years, in accordance with chapter 296-802 WAC.

(4) **Availability**.

(a) The employer, upon written request, must make all records required to be maintained by WAC 296-62-07355 through 296-62-07389 available to the director for examination and copying.

(b) The employer, upon request, must make any exemption and exposure records required by WAC 296-62-07377 (1) and (2) available for examination and copying to affected employees, former employees, designated representatives and the director, in accordance with chapter 296-802 WAC.

(c) The employer, upon request, must make employee medical records required by subsection (3) of this section available for examination and copying to the subject employee, anyone having the specific written consent of the subject employee, and the director, in accordance with chapter 296-802 WAC.

(5) **Transfer of records**.

(a) The employer must comply with the requirements concerning transfer of records set forth in chapter 296-802 WAC.

(b) Whenever the employer ceases to do business and there is no successor employer to receive and retain the records for the prescribed period, the employer must notify the director at least ninety days prior to disposal and transmit them to the director.

WAC 296-62-07377 Observation of monitoring.

(1) **Employee observation**. The employer must provide affected employees or their designated representatives an opportunity to observe any monitoring of employee exposure to EtO conducted in accordance with WAC 296-62-07361.

(2) **Observation procedures**. When observation of the monitoring of employee exposure to EtO requires entry into an area where the use of protective clothing or equipment is required, the observer must be provided with and be required to use such clothing and equipment and must comply with all other applicable safety and health procedures.

WAC 296-62-07381 Appendices.

The information contained in the appendices is not intended by itself to create any additional obligations not otherwise imposed or to detract from any existing obligation.

WAC 296-62-07383 Appendix A--Substance safety data sheet for ethylene oxide (nonmandatory).

(1) **Substance identification**.

(a) Substance: Ethylene oxide (C_2H_4O).

(b) Synonyms: Dihydrooxirene, dimethylene oxide, EO, 1,2-epoxyethane, EtO, EtO, oxacyclopropane, oxane, oxidoethane, alpha/beta-oxidoethane, oxiran, oxirane.

(c) Ethylene oxide can be found as a liquid or vapor.

(d) EtO is used in the manufacture of ethylene glycol, surfactants, ethanolamines, glycol ethers, and other organic chemicals. EtO is also used as a sterilant and fumigant.

(e) Appearance and odor: Colorless liquid below 10.7°C (51.3°F) or colorless gas with ether-like odor detected at approximately 700 parts EtO per million parts of air (700 ppm).

(f) Permissible exposure: Exposure may not exceed 1 part EtO per million parts of air averaged over the 8-hour work day.

(2) **Health hazard data**.

(a) Ethylene oxide can cause bodily harm if you inhale the vapor, if it comes into contact with your eyes or skin, or if you swallow it.

(b) Effects of overexposure:

(i) Ethylene oxide in liquid form can cause eye irritation and injury to the cornea, frostbite, and severe irritation and blistering of the skin upon prolonged or confined contact. Ingestion of EtO can cause gastric irritation and liver injury. Acute effects from inhalation of EtO vapors include respiratory irritation and lung injury, headache, nausea, vomiting, diarrhea, shortness of breath, and cyanosis (blue or purple coloring of skin). Exposure has also been associated with the occurrence of cancer, reproductive effects, mutagenic changes, neurotoxicity, and sensitization.

(ii) EtO has been shown to cause cancer in laboratory animals and has been associated with higher incidences of cancer in humans. Adverse reproductive effects and chromosome damage may also occur from EtO exposure.

(c) Reporting signs and symptoms: You should inform your employer if you develop any signs or symptoms and suspect that they are caused by exposure to EtO.

(3) **Emergency first aid procedures**.

(a) Eye exposure: If EtO gets into your eyes, wash your eyes immediately with large amounts of water, lifting the lower and upper eyelids. Get medical attention immediately. Contact lenses should not be worn when working with this chemical.

(b) Skin exposure: If EtO gets on your skin, immediately wash the contaminated skin with water. If EtO soaks through your clothing, especially your shoes, remove the clothing immediately and wash the skin with water using an emergency deluge shower. Get medical attention immediately. Thoroughly wash contaminated clothing before reusing. Contaminated leather shoes or other leather articles should not be reused and should be discarded.

(c) Inhalation: If large amounts of EtO are inhaled, the exposed person must be moved to fresh air at once. If breathing has stopped, perform cardiopulmonary resuscitation. Keep the affected person warm and at rest. Get medical attention immediately.

(d) Swallowing: When EtO has been swallowed, give the person large quantities of water immediately. After the water has been swallowed, try to get the person to vomit by having him or her touch the back of the throat with their finger. Do not make an unconscious person vomit. Get medical attention immediately.

(e) Rescue: Move the affected person from the hazardous exposure. If the exposed person has been overcome, attempt rescue only after notifying at least one other person of the emergency and putting into effect established emergency procedures. Do not become a casualty yourself. Understand your emergency rescue procedures and know the location of the emergency equipment before the need arises.

(4) **Respirators and protective clothing**.

(a) Respirators:

(i) You may be required to wear a respirator for nonroutine activities, in emergencies, while your employer is in the process of reducing EtO exposure through engineering controls, and in areas where engineering controls are not feasible. Only air supplied positive-pressure, full-facepiece respirators are approved for protection against EtO. If air-purifying respirators are worn in the future, they must have a label issued by the National Institute for Occupational Safety and Health (NIOSH) under the provisions of 42 CFR part 84 stating that the respirators have been certified for use with ethylene oxide. For effective protection, respirators must fit your face and head snugly. Respirators must not be loosened or removed in work situations where their use is required.

(ii) EtO does not have a detectable odor except at levels well above the permissible exposure limits. If you can smell EtO while wearing a respirator, proceed immediately to fresh air. If you experience difficulty breathing while wearing a respirator, tell your employer.

(b) Protective clothing:

(i) You may be required to wear impermeable clothing, gloves, a face shield, or other appropriate protective clothing to prevent skin contact with liquid EtO or EtO-containing solutions. Where protective clothing is required, your employer must provide clean garments to you as necessary to assure that the clothing protects you adequately.

(ii) Replace or repair protective clothing that has become torn or otherwise damaged.

(iii) EtO must never be allowed to remain on the skin. Clothing and shoes which are not impermeable to EtO should not be allowed to become contaminated with EtO, and if they do, the clothing should be promptly removed and decontaminated. Contaminated leather shoes should be discarded. Once EtO penetrates shoes or other leather articles, they should not be worn again.

(c) Eye protection: You must wear splashproof safety goggles in areas where liquid EtO or EtO-containing solutions may contact your eyes. In addition, contact lenses should not be worn in areas where eye contact with EtO can occur.

(5) **Precautions for safe use, handling, and storage**.

(a) EtO is a flammable liquid, and its vapors can easily form explosive mixtures in air.

(b) EtO must be stored in tightly closed containers in a cool, well-ventilated area, away from heat, sparks, flames, strong oxidizers, alkalines, and acids, strong bases, acetylide forming metals such as copper, silver, mercury and their alloys.

(c) Sources of ignition such as smoking material, open flames and some electrical devices are prohibited wherever EtO is handled, used, or stored in a manner that could create a potential fire or explosion hazard.

(d) You should use nonsparking tools when opening or closing metal containers of EtO, and containers must be bonded and grounded in the rare instances in which liquid EtO is poured or transferred.

(e) Impermeable clothing wet with liquid EtO or EtO-containing solutions may be easily ignited. If you are wearing impermeable clothing and are splashed with liquid EtO or EtO-containing solution, you should immediately remove the clothing while under an emergency deluge shower.

(f) If your skin comes into contact with liquid EtO or EtO-containing solutions, you should immediately remove the EtO using an emergency deluge shower.

(g) You should not keep food, beverages, or smoking materials in regulated areas where employee exposures are above the permissible exposure limits.

(h) Fire extinguishers and emergency deluge showers for quick drenching should be readily available, and you should know where they are and how to operate them.

(i) Ask your supervisor where EtO is used in your work area and for any additional plant safety and health rules.

(6) **Access to information**.

(a) Each year, your employer is required to inform you of the information contained in this standard and appendices for EtO. In addition, your employer must instruct you in the proper work-practices for using EtO emergency procedures, and the correct use of protective equipment.

(b) Your employer is required to determine whether you are being exposed to EtO. You or your representative has the right to observe employee measurements and to record the results obtained. Your employer is required to inform you of your exposure. If your employer determines that you are being overexposed, he or she is required to inform you of the actions which are being taken to reduce your exposure to within permissible exposure limits.

(c) Your employer is required to keep records of your exposures and medical examinations. These exposure records must be kept by the employer for at least thirty years. Medical records must be kept for the period of your employment plus thirty years.

(d) Your employer is required to release your exposure and medical records to your physician or designated representative upon your written request.

(7) **Sterilant use of EtO in hospitals and health care facilities**.

(a) This section of Appendix A, for informational purposes, sets forth EPA's recommendations for modifications in workplace design and practice in hospitals and health care facilities for which the Environmental Protection Agency has registered EtO for uses as a sterilant or fumigant under the Federal Insecticide, Fungicide, and

Rodenticide Act, 7 U.S.C. 136 et seq. These new recommendations, published in the Federal Register by EPA at 49 FR 15268, as modified in today's Register, are intended to help reduce the exposure of hospital and health care workers to EtO to 1 ppm. EPA's recommended workplace design and workplace practice are as follows:

(i) Workplace design.

(A) Installation of gas line hand valves. Hand valves must be installed on the gas supply line at the connection to the supply cylinders to minimize leakage during cylinder change.

Installation of capture boxes. Sterilizer operations result in a gas/water discharge at the completion of the process. This discharge is routinely piped to a floor drain which is generally located in an equipment or an adjacent room. When the floor drain is not in the same room as the sterilizer and workers are not normally present, all that is necessary is that the room be well ventilated. The installation of a “capture box” will be required for those work place layouts where the floor drain is located in the same room as the sterilizer or in a room where workers are normally present. A “capture box” is a piece of equipment that totally encloses the floor drain where the discharge from the sterilizer is pumped. The “capture box” is to be vented directly to a nonrecirculating or dedicated ventilation system. Sufficient air intake should be allowed at the bottom of the box to handle the volume of air that is ventilated from the top of the box. The “capture box” can be made of metal, plastic, wood or other equivalent material. The box is intended to reduce levels of EtO discharged into the work room atmosphere. The use of a “capture box” is not required if: (I) The vacuum pump discharge floor drain is located in a well-ventilated equipment or other room where workers are not normally present or (II) the water sealed vacuum pump discharges directly to a closed sealed sewer line (check local plumbing codes).

(B) If it is impractical to install a vented “capture box” and a well-ventilated equipment or other room is not feasible, a box that can be sealed over the floor drain may be used if: (I) The floor drain is located in a room where workers are not normally present and EtO cannot leak into an occupied area, and (II) the sterilizer in use is less than 12 cubic feet in capacity (check local plumbing codes).

(ii) Ventilation of aeration units.

(A) Existing aeration units. Existing units must be vented to a nonrecirculating or dedicated system or vented to an equipment or other room where workers are not normally present and which is well ventilated. Aerator units must be positioned as close as possible to the sterilizer to minimize the exposure from the off-gassing of sterilized items.

(B) Installation of new aerator units (where none exist). New aerator units must be vented as described above for existing aerators. Aerators must be in place by July 1, 1986.

(iii) Ventilation during cylinder change. Workers may be exposed to short but relatively high levels of EtO during the change of gas cylinders. To reduce exposure from this route, users must select one of three alternatives designed to draw off gas that may be released when the line from the sterilizer to the cylinder is disconnected:

(A) Location of cylinders in a well-ventilated equipment room or other room where workers are not normally present.

(B) Installation of a flexible hose (at least four inches in diameter) to a nonrecirculating or dedicated ventilation system and located in the area of cylinder change in such a way that the hose can be positioned at the point where the sterilizer gas line is disconnected from the cylinder.

(C) Installation of a hood that is part of a nonrecirculating or dedicated system and positioned no more than one foot above the point where the change of cylinders takes place.

(iv) Ventilation of sterilizer door area. One of the major sources of exposure to EtO occurs when the sterilizer door is opened following the completion of the sterilization process. In order to reduce this avenue of exposure, a hood or metal canopy closed on each end must be installed over the sterilizer door. The hood or metal canopy must be connected to a nonrecirculating or dedicated ventilation system or one that exhausts gases to a well-ventilated equipment or other room where workers are not normally present. A hood or canopy over the sterilizer door is required for use even with those sterilizers that have a purge cycle and must be in place by July 1, 1986.

(v) Ventilation of sterilizer relief valve. Sterilizers are typically equipped with a safety relief device to release gas in case of increased pressure in the sterilizer. Generally, such relief devices are used on pressure vessels. Although these pressure relief devices are rarely opened for hospital and health care sterilizers, it is suggested that they be designed to exhaust vapor from the sterilizer by one of the following methods:

(A) Through a pipe connected to the outlet of the relief valve ventilated directly outdoors at a point high enough to be away from passersby, and not near any windows that open, or near any air conditioning or ventilation air intakes.

(B) Through a connection to an existing or new nonrecirculating or dedicated ventilation system.

(C) Through a connection to a well-ventilated equipment or other room where workers are not normally present.

(vi) Ventilation systems. Each hospital and health care facility affected by this notice that uses EtO for the sterilization of equipment and supplies must have a ventilation system which enables compliance with the requirements of (a)(i)(B) through (v) of this subsection in the manner described in these sections and within the timeframes allowed. Thus, each affected hospital and health care facility must have or install a nonrecirculating or dedicated ventilation equipment or other room where workers are not normally present in which to vent EtO.

(vii) Installation of alarm systems. An audible and visual indicator alarm system must be installed to alert personnel of ventilation system failures, i.e., when the ventilation fan motor is not working.

(b) Workplace practices

(i) All the workplace practices discussed in this unit must be permanently posted near the door of each sterilizer prior to use by any operator.

(ii) Changing of supply line filters.

Filters in the sterilizer liquid line must be changed when necessary, by the following procedure:

(A) Close the cylinder valve and the hose valve.

(B) Disconnect the cylinder hose (piping) from the cylinder.

(C) Open the hose valve and bleed slowly into a proper ventilating system at or near the in-use supply cylinders.

(D) Vacate the area until the line is empty.

(E) Change the filter.

(F) Reconnect the lines and reverse the valve position.

(G) Check hoses, filters, and valves for leaks with a fluorocarbon leak detector (for those sterilizers using the eighty-eight percent chlorofluorocarbon, twelve percent ethylene oxide mixture (12/88)).

(iii) Restricted access area.

(A) Areas involving use of EtO must be designated as restricted access areas. They must be identified with signs or floor marks near the sterilizer door, aerator, vacuum pump floor drain discharge, and in-use cylinder storage.

(B) All personnel must be excluded from the restricted area when certain operations are in progress, such as discharging a vacuum pump, emptying a sterilizer liquid line, or venting a nonpurge sterilizer with the door ajar or other operations where EtO might be released directly into the face of workers.

(iv) Door opening procedures.

(A) Sterilizers with purge cycles. A load treated in a sterilizer equipped with a purge cycle should be removed immediately upon completion of the cycle (provided no time is lost opening the door after cycle is completed). If this is not done, the purge cycle should be repeated before opening door.

(B) Sterilizers without purge cycles. For a load treated in a sterilizer not equipped with a purge cycle, the sterilizer door must be ajar six inches for fifteen minutes, and then fully opened for at least another fifteen minutes before removing the treated load. The length of time of the second period should be established by peak monitoring for one hour after the two fifteen-minute periods suggested.

(C) If the level is above 10 ppm time-weighted average for eight hours, more time should be added to the second waiting period (door wide open). However, in no case may the second period be shortened to less than fifteen minutes.

(v) Chamber unloading procedures.

(A) Procedures for unloading the chamber must include the use of baskets or rolling carts, or baskets and rolling tables to transfer treated loads quickly, thus avoiding excessive contact with treated articles, and reducing the duration of exposures.

(B) If rolling carts are used, they should be pulled not pushed by the sterilizer operators to avoid offgassing exposure.

(vi) Maintenance. A written log should be instituted and maintained documenting the date of each leak detection and any maintenance procedures undertaken. This is a suggested use practice and is not required.

(vii) Leak detection. Sterilizer door gaskets, cylinder and vacuum piping, hoses, filters, and valves must be checked for leaks under full pressure with a Fluorocarbon leak detector (for 12/88 systems only) every two weeks by maintenance personnel. Also, the cylinder piping connections must be checked after changing cylinders. Particular attention in leak detection should be given to the automatic solenoid valves that control the flow of EtO to the sterilizer. Specifically, a check should be made at the EtO gasline entrance port to the sterilizer, while the sterilizer door is open and the solenoid valves are in a closed position.

(viii) Maintenance procedures. Sterilizer/aerator door gaskets, valves, and fittings must be replaced when necessary as determined by maintenance personnel in their biweekly checks; in addition, visual inspection of the door gaskets for cracks, debris, and other foreign substances should be conducted daily by the operator.

WAC 296-62-07385 Appendix B--Substance technical guidelines for ethylene oxide (nonmandatory).

(1) **Physical and chemical data**:

(a) Substance identification:

(i) Synonyms: Dihydrooxirene, dimethylene oxide, EO, 1,2-epoxyethane, EtO, EtO, oxacyclopropane, oxane, oxidoethane, alpha/beta-oxidoethane, oxiran, oxirane.

(ii) Formula: (C_2H_4O).

(iii) Molecular weight: 44.06.

(b) Physical data:

(i) Boiling point (760 mm Hg): 10.70°C (51.3°F);

(ii) Specific gravity (water = 1): 0.87 (at 20°C or 68°F);

(iii) Vapor density (air = 1): 1.49;

(iv) Vapor pressure (at 20°C): 1,095 mm Hg;

(v) Solubility in water: Complete;

(vi) Appearance and odor: Colorless liquid; gas at temperature above 10.7°F or 51.3°C with ether-like odor above 700 ppm.

(2) **Fire, explosion, and reactivity hazard data**:

(a) Fire:

(i) Flash point; Less than 0°F (open cup);

(ii) Stability: Decomposes violently at temperatures above 800°F;

(iii) Flammable limits in air, percent by volume: Lower: 3, Upper: 100;

(iv) Extinguishing media: Carbon dioxide for small fires, polymer or alcohol foams for large fires;

(v) Special firefighting procedures: Dilution of ethylene oxide with 23 volumes of water renders it nonflammable;

(vi) Unusual fire and explosion hazards: Vapors of EtO will burn without the presence of air or other oxidizers. EtO vapors are heavier than air and may travel along the ground and be ignited by open flames or sparks at locations remote from the site at which EtO is being used.

(vii) For purposes of compliance with the requirements of WAC 296-24-330, EtO is classified as a flammable gas. For example, 7,500 ppm, approximately one-fourth of the lower flammable limit, would be considered to pose a potential fire and explosion hazard.

(viii) For purposes of compliance with WAC 296-24-585, EtO is classified as a Class B fire hazard.

(ix) For purpose of compliance with chapter 296-24 WAC Part L, and WAC 296-800-280, locations classified as hazardous due to the presence of EtO shall be Class I.

(b) Reactivity:

(i) Conditions contributing to instability: EtO will polymerize violently if contaminated with aqueous alkalies, amines, mineral acids, metal chlorides, or metal oxides. Violent decomposition will also occur at temperatures above 800°F;

(ii) Incompatibilities: Alkalines and acids;

(iii) Hazardous decomposition products: Carbon monoxide and carbon dioxide.

(3) **Spill, leak, and disposal procedures**:

(a) If EtO is spilled or leaked, the following steps should be taken:

(i) Remove all ignition sources.

(ii) The area should be evacuated at once and re-entered only after the area has been thoroughly ventilated and washed down with water.

(b) Persons not wearing appropriate protective equipment should be restricted from areas of spills or leaks until cleanup has been completed.

(c) Waste disposal method: Waste material should be disposed of in a manner that is not hazardous to employees or to the general population. In selecting the method of waste disposal, applicable local, state, and federal regulations should be consulted.

(4) **Monitoring and measurement procedures**:

(a) Exposure above the permissible exposure limit:

(i) Eight-hour exposure evaluation: Measurements taken for the purpose of determining employee exposure under this section are best taken with consecutive samples covering the full shift. Air samples should be taken in the employee's breathing zone (air that would most nearly represent that inhaled by the employee.)

(ii) Monitoring techniques: The sampling and analysis under this section may be performed by collection of the EtO vapor on charcoal adsorption tubes or other composition adsorption tubes, with subsequent chemical analysis. Sampling and analysis may also be performed by instruments such as real time continuous monitoring systems, portable direct reading instruments, or passive dosimeters as long as measurements taken using these methods accurately evaluate the concentration of EtO in employees' breathing zones.

(iii) Appendix D describes the validated method of sampling and analysis which has been tested by OSHA for use with EtO. Other available methods are also described in Appendix D. The employer has the obligation of selecting a monitoring method which meets the accuracy and precision requirements of the standard under their unique field conditions. The standard requires that the method of monitoring should be accurate, to a 95 percent confidence level, to plus or minus 25 percent for concentrations of EtO at 1 ppm, and to plus or minus 35 percent for concentrations at 0.5 ppm. In addition to the method described in Appendix D, there are numerous other methods available for monitoring for EtO in the workplace. Details on these other methods have been submitted by various companies to the rulemaking record, and are available at the OSHA Docket Office.

(b) Since many of the duties relating to employee exposure are dependent on the results of measurement procedures, employers should assure that the evaluation of employee exposures is performed by a technically qualified person.

(5) **Protective clothing and equipment**:

(a) Employees should be provided with and be required to wear appropriate protective clothing wherever there is significant potential for skin contact with liquid EtO or EtO-containing solutions. Protective clothing shall include impermeable coveralls or similar full-body work clothing, gloves, and head coverings, as appropriate to protect areas of the body which may come in contact with liquid EtO or EtO-containing solutions.

(b) Employers should ascertain that the protective garments are impermeable to EtO. Permeable clothing, including items made of rubber, and leather shoes should not be allowed to become contaminated with liquid EtO. If permeable clothing does become contaminated, it should be immediately removed, while the employer is under an emergency deluge shower. If leather footwear or other leather garments become wet from EtO they should be discarded and not be worn again, because leather absorbs EtO and holds it against the skin.

(c) Any protective clothing that has been damaged or is otherwise found to be defective should be repaired or replaced. Clean protective clothing should be provided to the employee as necessary to assure employee protection. Whenever impermeable clothing becomes wet with liquid EtO, it should be washed down with water before being removed by the employee. Employees are also required to wear splashproof safety goggles where there is any possibility of EtO contacting the eyes.

(6) **Miscellaneous precautions**:

(a) Store EtO in tightly closed containers in a cool, well-ventilated area and take all necessary precautions to avoid any explosion hazard.

(b) Nonsparking tools must be used to open and close metal containers. These containers must be effectively grounded and bonded.

(c) Do not incinerate EtO cartridges, tanks or other containers.

(d) Employers should advise employees of all areas and operations where exposure to EtO occurs.

(7) **Common operations**:

Common operations in which exposure to EtO is likely to occur include the following: (a) Manufacture of EtO, (b) surfactants, (c) ethanolamines, (d) glycol ethers, (e) specialty chemicals, and (f) use as a sterilant in the hospital, health product and spice industries.

WAC 296-62-07387 Appendix C--Medical surveillance guidelines for ethylene oxide (nonmandatory).

(1) **Route of entry: Inhalation**.

(2) **Toxicology**:

(a) Clinical evidence of adverse effects associated with the exposure to EtO is present in the form of increased incidence of cancer in laboratory animals (leukemia, stomach, brain), mutation in offspring in animals, and resorptions and spontaneous abortions in animals and human populations respectively. Findings in humans and experimental animals exposed to airborne concentrations of EtO also indicate damage to the genetic material (DNA). These include hemoglobin alkylation, unscheduled DNA synthesis, sister chromatid exchange chromosomal aberration, and functional sperm abnormalities.

(b) Ethylene oxide in liquid form can cause eye irritation and injury to the cornea, frostbite, severe irritation, and blistering of the skin upon prolonged or confined contact. Ingestion of EtO can cause gastric irritation and liver injury. Other effects from inhalation of EtO vapors include respiratory irritation and lung injury, headache, nausea, vomiting, diarrhea, dyspnea and cyanosis.

(3) **Signs and symptoms of acute overexposure**:

(a) The early effects of acute overexposure to EtO are nausea and vomiting, headache, and irritation of the eyes and respiratory passages. The patient may notice a "peculiar taste" in the mouth. Delayed effects can include pulmonary edema, drowsiness, weakness, and incoordination. Studies suggest that blood cell changes, an increase in chromosomal aberrations, and spontaneous abortion may also be casually related to acute overexposure to EtO.

(b) Skin contact with liquid or gaseous EtO causes characteristic burns and possible even an allergic-type sensitization. The edema and erythema occurring from skin contact with EtO progress to vesiculation with a tendency to coalesce into blebs with desquamation. Healing occurs within three weeks, but there may be a residual brown pigmentation. A 40-80% solution is extremely dangerous, causing extensive blistering after only brief contact. Pure liquid EtO causes frostbite because of rapid evaporation. In contrast, the eye is relatively insensitive to EtO, but there may be some irritation of the cornea.

(c) Most reported acute effects of occupational exposure to EtO are due to contact with EtO in liquid phase. The liquid readily penetrates rubber and leather, and will produce blistering if clothing or footwear contaminated with EtO are not removed.

(4) **Surveillance and preventive considerations**:

(a) As noted above, exposure to EtO has been linked to an increased risk of cancer and reproductive effects including decreased male fertility, fetotoxicity, and spontaneous abortion. EtO workers are more likely to have chromosomal damage than similar groups not exposed to EtO. At the present, limited studies of chronic effects in humans resulting from exposure to EtO suggest a causal association with leukemia. Animal studies indicate leukemia and cancers at other sites (brain, stomach) as well. The physician should be aware of the findings of these studies in evaluating the health of employees exposed to EtO.

(b) Adequate screening tests to determine an employee's potential for developing serious chronic diseases, such as cancer, from exposure to EtO do not presently exist. Laboratory tests may, however, give evidence to suggest that an employee is potentially overexposed to EtO.

It is important for the physician to become familiar with the operating conditions in which exposure to EtO is likely to occur. The physician also must become familiar with the signs and symptoms that indicate a worker is receiving otherwise unrecognized and unacceptable exposure to EtO. These elements are especially important in evaluating the medical and work histories and in conducting the physical exam. When an unacceptable exposure in an active employee is identified by the physician, measures taken by the employer to lower exposure should also lower the risk of serious long-term consequences.

(c) The employer is required to institute a medical surveillance program for all employees who are or will be exposed to EtO at or above the action level (0.5 ppm) for at least 30 days per year, without regard to respirator use. All examinations and procedures must be performed by or under the supervision of a licensed physician at a reasonable time and place for the employee and at no cost to the employee.

(d) Although broad latitude in prescribing specific tests to be included in the medical surveillance program is extended to the examining physician, WISHA requires inclusion of the following elements in the routine examination:

(i) Medical and work histories with special emphasis directed to symptoms related to the pulmonary, hematologic, neurologic, and reproductive systems and to the eyes and skin.

(ii) Physical examination with particular emphasis given to the pulmonary, hematologic, neurologic, and reproductive systems and to the eyes and skin.

(iii) Complete blood count to include at least a white cell count (including differential cell count), red cell count, hematocrit, and hemoglobin.

(iv) Any laboratory or other test which the examining physician deems necessary by sound medical practice.

(e) If requested by the employee, the medical examinations shall include pregnancy testing or laboratory evaluation of fertility as deemed appropriate by the physician.

(f) In certain cases, to provide sound medical advice to the employer and the employee, the physician must evaluate situations not directly related to EtO. For example, employees with skin diseases may be unable to tolerate wearing protective clothing. In addition those with chronic respiratory diseases may not tolerate the wearing of negative pressure (air purifying) respirators. Additional tests and procedures that will help the physician determine which employees are medically unable to wear such respirators should include: An evaluation of cardiovascular function, a baseline chest x-ray to be repeated at five year intervals, and a pulmonary function test to be repeated every three years. The pulmonary function test should include measurement of the employee's forced vital capacity (FVC), forced expiratory volume at one second (FEV_1), as well as calculation of the ratios of FEV_1 to FVC, and measured FVC and measured FEV_1 to expected values corrected for variation due to age, sex, race, and height.

(g) The employer is required to make the prescribed tests available at least annually to employees who are or will be exposed at or above the action level, for 30 or more days per year; more often than specified if recommended by the examining physician; and upon the employee's termination of employment or reassignment to another work area. While little is known about the long-term consequences of high short-term exposures, it appears prudent to monitor such affected employees closely in light of existing health data. The employer shall provide physician recommended examinations to any employee exposed to EtO in emergency conditions. Likewise, the employer shall make available medical consultations including physician recommended exams to employees who believe they are suffering signs or symptoms of exposure to EtO.

(h) The employer is required to provide the physician with the following information: A copy of this standard and its appendices; a description of the affected employee's duties as they relate to the employee exposure level; and information from the employee's previous medical examinations which is not readily available to the examining physician. Making this information available to the physician will aid in the evaluation of the employee's health in relation to assigned duties and fitness to wear personal protective equipment, when required.

(i) The employer is required to obtain a written opinion from the examining physician containing the results of the medical examinations; the physician's opinion as to whether the employee has any detected medical conditions which would place the employee at increased risk of material impairment of their health from exposure to EtO; any recommended restrictions upon the employee's exposure to EtO, or upon the use of protective clothing or equipment such as respirators; and a statement that the employee has been informed by the physician of the results of the medical examination and of any medical conditions which require further explanation or treatment. This written opinion must not reveal specific findings or diagnoses unrelated to occupational exposure to EtO, and a copy of the opinion must be provided to the affected employee.

(j) The purpose in requiring the examining physician to supply the employer with a written opinion is to provide the employer with a medical basis to aid in the determination of initial placement of employees and to assess the employee's ability to use protective clothing and equipment.

WAC 296-62-07389 Appendix D--Sampling and analytical methods for ethylene oxide (nonmandatory).

(1) A number of methods are available for monitoring employee exposures to EtO. Most of these involve the use of charcoal tubes and sampling pumps, followed by analysis of the samples by gas chromatograph. The essential differences between the charcoal tube methods include, among others, the use of different desorbing solvents, the use of different lots of charcoal, and the use of different equipment for analysis of the samples. Besides charcoal, methods using passive dosimeters, gas sampling bags, impingers, and detector tubes have been utilized for determination of EtO exposure.

In addition, there are several commercially available portable gas analyzers and monitoring units. This appendix contains details for the method which has been tested at the OSHA Analytical Laboratory in Salt Lake City. Inclusion of this method in the appendix does not mean that this method is the only one which will be satisfactory. Copies of descriptions of other methods available are available in the rulemaking record, and may be obtained from the OSHA Docket Office. These include the Union Carbide, Dow Chemical, 3M, and DuPont methods, as well as NIOSH Method S-286. These methods are briefly described at the end of this appendix.

(2) Employers who note problems with sample breakthrough using the OSHA or other charcoal methods should try larger charcoal tubes. Tubes of larger capacity are available. In addition, lower flow rates and shorter sampling times should be beneficial in minimizing breakthrough problems. Whatever method the employer chooses, he/she must assure himself/herself of the method's accuracy and precision under the unique conditions present in his workplace.

(3) **Ethylene oxide**:

(a) Method No.: 30.

(b) Matrix: Air.

(i) Target concentration: 1.0 ppm (1.8 mg/m^3)

(ii) Procedure: Samples are collected on two charcoal tubes in series and desorbed with 1% CS2 in benzene. The samples are derivatized with HBr and treated with sodium carbonate. Analysis is done by gas chromatography with an electron capture detector.

(iii) Recommended air volume and sampling rate: 1 liter and 0.05 Lpm.

(iv) Detection limit of the overall procedure: 13.3 ppb (0.024 mg/m^3) (based on 1.0 liter air sample).

(v) Reliable quantitation limit: 52.2 ppb (0.094 mg/m^3) (based on 1.0 liter air sample).

(vi) Standard error of estimate: 6.59% (see backup section 4.6).

(vii) Special requirements: Samples must be analyzed within 15 days of sampling date.

(viii) Status of method: The sampling and analytical method has been subject to the established evaluation procedures of the Organic Method Evaluations Branch.

(c) Date: August 1981.

(d) Chemist: Wayne D. Potter

(e) Organic Solvents Branch, OSHA Analytical Laboratory, Salt Lake City, Utah

(f) General discussion:

(i) Background.

(A) History of procedure.

(I) Ethylene oxide samples analyzed at the OSHA laboratory have normally been collected on activated charcoal and desorbed with carbon disulfide. The analysis is performed with a gas chromatograph equipped with a FID (flame ionization detector) as described in NIOSH Method S286 (Ref. (3)(j)(i)). This method is based on a PEL of 50 ppm and has a detection limit of about 1 ppm.

(II) Recent studies have prompted the need for a method to analyze and detect ethylene oxide at very low concentrations.

(III) Several attempts were made to form an ultraviolet (UV) sensitive derivative with ethylene oxide for analysis with HPLC. Among those tested that gave no detectable product were: p-anisidine, methylimidazole, aniline, and 2,3,6-trichlorobenzoic acid. Each was tested with catalysts such as triethylamine, aluminum chloride, methylene chloride and sulfuric acid but no detectable derivative was produced.

(IV) The next derivatization attempt was to react ethylene oxide with HBr to form 2-bromoethanol. This reaction was successful. An ECD (electron capture detector) gave a very good response for 2-bromoethanol due to the presence of bromine. The use of carbon disulfide as the desorbing solvent gave too large a response and masked the 2-bromoethanol. Several other solvents were tested for both their response on the ECD and their ability to desorb ethylene oxide from the charcoal. Among those tested were toluene, xylene, ethyl benzene, hexane, cyclohexane and benzene. Benzene was the only solvent tested that gave a suitable response on the ECD and a high desorption. It was found that the desorption efficiency was improved by using 1% CS2 with the benzene. The carbon disulfide did not significantly improve the recovery with the other solvents. SKC Lot 120 was used in all tests done with activated charcoal.

(B) Physical properties (Ref. (3)(j)(ii) - (iv)):

(I) Synonyms: Oxirane; dimethylene oxide; 1,2-epoxy-ethane; oxane; C_2H_4O; EtO;

(II) Molecular weight: 44.06;

(III) Boiling point: 10.7°C (51.3°);

(IV) Melting point:--111°C;

(V) Description: Colorless, flammable gas;

(VI) Vapor pressure: 1095 mm. at 20°C;

(VII) Odor: Ether-like odor;

(VIII) Lower explosive limits: 3.0% (by volume);

(IX) Flash point (TOC): Below 0°F;

(X) Molecular structure: CH2--CH2;

(ii) Limit defining parameters:

(A) Detection limit of the analytical procedure. The detection limit of the analytical procedure is 12.0 picograms of ethylene oxide per injection. This is the amount of analyte which will give a peak whose height is five times the height of the baseline noise. (See backup data section (3)(i)(i).)

(B) Detection limit of the overall procedure.

(I) The detection limit of the overall procedure is 24.0 ng of ethylene oxide per sample.

(II) This is the amount of analyte spiked on the sampling device which allows recovery of an amount of analyte equivalent to the detection limit of the analytical procedure. (See backup data section (3)(i)(ii).)

(C) Reliable quantitation limit.

(I) The reliable quantitation limit is 94.0 nanograms of ethylene oxide per sample. This is the smallest amount of analyte which can be quantitated within the requirements of 75% recovery and 95% confidence limits. (See backup data section (3)(i)(ii).)

(II) It must be recognized that the reliable quantitation limit and detection limits reported in the method are based upon optimization of the instrument for the smallest possible amount of analyte. When the target concentration of an analyte is exceptionally higher than these limits, they may not be attainable at the routine operating parameters. In this case, the limits reported on analysis reports will be based on the operating parameters used during the analysis of the samples.

(D) Sensitivity.

(I) The sensitivity of the analytical procedure over a concentration range representing 0.5 to 2 times the target concentration based on the recommended air volume is 34105 area units per µg/mL. The sensitivity is determined by the slope of the calibration curve (see backup data section (3)(i)(iii)).

(II) The sensitivity will vary somewhat with the particular instrument used in the analysis.

(E) Recovery. The recovery of analyte from the collection medium must be 75% or greater. The average recovery from spiked samples over the range of 0.5 to 2 times the target concentration is 88.0% (see backup section (3)(i)(iv)). At lower concentrations the recovery appears to be nonlinear.

(F) Precision (analytical method only). The pooled coefficient of variation obtained from replicate determination of analytical standards at 0.5X, 1X and 2X the target concentration is 0.036 (see backup data section (3)(i)(v)).

(G) Precision (overall procedure).

(I) The overall procedure must provide results at the target concentration that are 25% or better at the 95% confidence level. The precision at the 95% confidence level for the 15 day storage test is plus or minus 12.9% (see backup data section(3)(i)(vi)).

(II) This includes an additional plus or minus 5% for sampling error.

(iii) Advantages.

(A) The sampling procedure is convenient.

(B) The analytical procedure is very sensitive and reproducible.

(C) Reanalysis of samples is possible.

(D) Samples are stable for at least 15 days at room temperature.

(E) Interferences are reduced by the longer GC retention time of the new derivative.

(iv) Disadvantages.

(A) Two tubes in series must be used because of possible breakthrough and migration.

(B) The precision of the sampling rate may be limited by the reproducibility of the pressure drop across the tubes. The pumps are usually calibrated for one tube only.

(C) The use of benzene as the desorption solvent increases the hazards of analysis because of the potential carcinogenic effects of benzene.

(D) After repeated injections there can be a buildup of residue formed on the electron capture detector which decreases sensitivity.

(E) Recovery from the charcoal tubes appears to be nonlinear at low concentrations.

(g) Sampling procedure.

(i) Apparatus.

(A) A calibrated personal sampling pump whose flow can be determined within plus or minus 5% of the recommended flow.

(B) SKC Lot 120 Charcoal tubes: Glass tube with both ends flame sealed, 7 cm long with a 6 mm O.D. and a 4-mm I.D., containing 2 sections of coconut shell charcoal separated by a 2-mm portion of urethane foam. The adsorbing section contains 100 mg of charcoal, the backup section 50 mg. A 3-mm portion of urethane foam is placed between the outlet end of the tube and the backup section. A plug of silylated glass wool is placed in front of the adsorbing section.

(ii) Reagents. None required.

(iii) Sampling technique.

(A) Immediately before sampling, break the ends of the charcoal tubes. All tubes must be from the same lot.

(B) Connect two tubes in series to the sampling pump with a short section of flexible tubing. A minimum amount of tubing is used to connect the two sampling tubes together. The tube closer to the pump is used as a backup. This tube should be identified as the backup tube.

(C) The tubes should be placed in a vertical position during sampling to minimize channeling.

(D) Air being sampled should not pass through any hose or tubing before entering the charcoal tubes.

(E) Seal the charcoal tubes with plastic caps immediately after sampling. Also, seal each sample with OSHA seals lengthwise.

(F) With each batch of samples, submit at least one blank tube from the same lot used for samples. This tube should be subjected to exactly the same handling as the samples (break, seal, transport) except that no air is drawn through it.

(G) Transport the samples (and corresponding paperwork) to the lab for analysis.

(H) If bulk samples are submitted for analysis, they should be transported in glass containers with Teflon-lined caps. These samples must be mailed separately from the container used for the charcoal tubes.

(iv) Breakthrough.

The breakthrough (5% breakthrough) volume for a 3.0 mg/m^3 ethylene oxide sample stream at approximately 85% relative humidity, 22°C and 633 mm is 2.6 liters sampled at 0.05 liters per minute. This is equivalent to 7.8 µg of ethylene oxide. Upon saturation of the tube it appeared that the water may be displacing ethylene oxide during sampling.

(v) Desorption efficiency.

(A) The desorption efficiency, from liquid injection onto charcoal tubes, averaged 88.0% from 0.5 to 2.0 x the target concentration for a 1.0 liter air sample. At lower ranges it appears that the desorption efficiency is nonlinear (see backup data section (3)(i)(ii)).

(B) The desorption efficiency may vary from one laboratory to another and also from one lot of charcoal to another. Thus, it is necessary to determine the desorption efficiency for a particular lot of charcoal.

(vi) Recommended air volume and sampling rate.

(A) The recommended air volume is 1.0 liter.

(B) The recommended maximum sampling rate is 0.05 Lpm.

(vii) Interferences.

(A) Ethylene glycol and Freon 12 at target concentration levels did not interfere with the collection of ethylene oxide.

(B) Suspected interferences should be listed on the sample data sheets.

(C) The relative humidity may affect the sampling procedure.

(viii) Safety precautions.

(A) Attach the sampling equipment to the employee so that it does not interfere with work performance.

(B) Wear safety glasses when breaking the ends of the sampling tubes.

(C) If possible, place the sampling tubes in a holder so the sharp end is not exposed while sampling.

(h) Analytical method.

(i) Apparatus.

(A) Gas chromatograph equipped with a linearized electron capture detector.

(B) GC column capable of separating the derivative of ethylene oxide (2-bromoethanol) from any interferences and the 1% CS2 in benzene solvent. The column used for validation studies was: 10 ft. x 1/8 inch stainless steel 20% SP-2100, .1% Carbowax 1500 on 100/120 Supelcoport.

(C) An electronic integrator or some other suitable method of measuring peak areas.

(D) Two milliliter vials with Teflon-lined caps.

(E) Gas tight syringe--500 µL or other convenient sizes for preparing standards.

(F) Microliter syringes--10 µL or other convenient sizes for diluting standards and 1 µL for sample injections.

(G) Pipets for dispensing the 1% CS2 in benzene solvent. The Glenco 1 mL dispenser is adequate and convenient.

(H) Volumetric flasks--5 mL and other convenient sizes for preparing standards.

(I) Disposable Pasteur pipets.

(ii) Reagents.

(A) Benzene, reagent grade.

(B) Carbon disulfide, reagent grade.

(C) Ethylene oxide, 99.7% pure.

(D) Hydrobromic acid, 48% reagent grade.

(E) Sodium carbonate, anhydrous, reagent grade.

(F) Desorbing reagent, 99% Benzene/1% CS2.

(iii) Sample preparation.

(A) The front and back sections of each sample are transferred to separate 2-mL vials.

(B) Each sample is desorbed with 1.0 mL of desorbing reagent.

(C) The vials are sealed immediately and allowed to desorb for one hour with occasional shaking.

(D) Desorbing reagent is drawn off the charcoal with a disposable pipet and put into clean 2-mL vials.

(E) One drop of HBr is added to each vial. Vials are resealed and HBr is mixed well with the desorbing reagent.

(F) About 0.15 gram of sodium carbonate is carefully added to each vial. Vials are again resealed and mixed well.

(iv) Standard preparation.

(A) Standards are prepared by injecting the pure ethylene oxide gas into the desorbing reagent.

(B) A range of standards are prepared to make a calibration curve. A concentration of 1.0 µL of ethylene oxide gas per 1 mL desorbing reagent is equivalent to 1.0 ppm air concentration (all gas volumes at 25°C and 760 mm) for the recommended 1 liter air sample. This amount is uncorrected for desorption efficiency (see backup data section (3)(i)(ii), for desorption efficiency corrections).

(C) One drop of HBr per mL of standard is added and mixed well.

(D) About 0.15 grams of sodium carbonate is carefully added for each drop of HBr (a small reaction will occur).

(v) Analysis.

(A) GC conditions.

Nitrogen flow rate--10mL/min.

Injector temperature--250°C

Detector temperature--300°C

Column temperature--100°C

Injection size--0.8 µL

Elution time--3.9 minutes

(B) Peak areas are measured by an integrator or other suitable means.

(C) The integrator results are in area units and a calibration curve is set up with concentration vs. area units.

(vi) Interferences.

(A) Any compound having the same retention time of 2-bromoethanol is a potential interference. Possible interferences should be listed on the sample data sheets.

(B) GC parameters may be changed to circumvent interferences.

(C) There are usually trace contaminants in benzene.

(D) These contaminants, however, posed no problem of interference.

(E) Retention time date on a single column is not considered proof of chemical identity. Samples over the 1.0 ppm target level should be confirmed by GC/Mass Spec or other suitable means.

(vii) Calculations.

(A) The concentration in µg/mL for a sample is determined by comparing the area of a particular sample to the calibration curve, which has been prepared from analytical standards.

(B) The amount of analyte in each sample is corrected for desorption efficiency by use of a desorption curve.

(C) Analytical results, A, from the two tubes that compose a particular air sample are added together.

(D) The concentration for a sample is calculated by the following equation:

$$\text{EtO, mg/m}^3 = \frac{A \times B}{C}$$

where:

A = µg/mL

B = desorption volume in milliliters

C = air volume in liters.

(E) To convert mg/m^3 to parts per million (ppm) the following relationship is used:

$$\text{EtO, ppm} = \frac{\text{mg/m}^3 \times 24.45}{44.05}$$

where:

mg/m^3 = results from 3.7.4

24.45 = molar volume at 25°C and 760mm Hg

44.05 = molecular weight of EtO.

(viii) Safety precaution.

(A) Ethylene oxide and benzene are potential carcinogens and care must be exercised when working with these compounds.

(B) All work done with the solvents (preparation of standards, desorption of samples, etc.) should be done in a hood.

(C) Avoid any skin contact with all of the solvents.

(D) Wear safety glasses at all times.

(E) Avoid skin contact with HBr because it is highly toxic and a strong irritant to eyes and skin.

(i) Backup data.

(i) Detection limit data.

The detection limit was determined by injecting 0.8 µL of a 0.015 µg/mL standard of ethylene oxide into 1% CS2 in benzene. The detection limit of the analytical procedure is taken to be 1.20 x 10-5 µg per injection. This is equivalent to 8.3 ppb (0.015 mg/m^3) for the recommended air volume.

(ii) Desorption efficiency. Ethylene oxide was spiked into charcoal tubes and the following recovery data was obtained:

Amount Spiked (µg)	***Amount Recovered (µg)***	***Percent Recovery***
4.5	4.32	96.0
3.0	2.61	87.0
2.25	2.025	90.0
1.5	1.365	91.0
1.6	1.38	92.0
.75	.6525	87.0
.375	.315	84.0
.375	.312	83.2
.1875	.151	80.5
.094	.070	74.5

Note: At lower amounts the recovery appears to be nonlinear.

(iii) Sensitivity data. The following data was used to determine the calibration curve:

Injection	0.5 x .75 µg/mL	1 x 1.5 µg/mL	2 x 3.0 µg/mL
1	30904	59567	111778
2	30987	62914	106016
3	32555	58578	106122
4	32242	57173	109716
X	31672	59558	108408

Slope = 34.105.

(iv) Recovery. The recovery was determined by spiking ethylene oxide onto lot 120 charcoal tubes and desorbing with 1% CS2 in Benzene. Recoveries were done at 0.5, 1.0, and 2.0 X the target concentration (1 ppm) for the recommended air volume.

Percent Recovery			
Sample	0.5x	1.0x	2.0x
1	88.7	95.0	91.7
2	83.8	95.0	87.3
3	84.2	91.0	86.0
4	88.0	91.0	83.0
5	88.0	86.0	85.0
X	86.5	90.5	87.0

Weighted average = 88.2

(v) Precision of the analytical procedure. The following data was used to determine the precision of the analytical method:

Concentration	0.5 x .75 µg/ml	1 x 1.5 µg/mL	2 x 3.0 µg/mL
Injection	.7421	1.4899	3.1184
	.7441	1.5826	3.0447
	.7831	1.4628	2.9149
	.7753	1.4244	2.9185
Average	.7612	1.4899	2.9991
Standard Deviation	.0211	.0674	.0998
CV	.0277	.0452	.0333

$$CV = \frac{3(.0277)^2 + 3\,(.0452)^2 + 3\,(.0333)^2}{3 + 3 + 3}$$

CV + 0.036

(vi) Storage data. Samples were generated at 1.5 mg/m^3 ethylene oxide at 85% relative humidity, 22°C and 633 mm. All samples were taken for 20 minutes at 0.05 Lpm. Six samples were analyzed as soon as possible and fifteen samples were stored at refrigerated temperature (5°C) and fifteen samples were stored at ambient temperature (23°C). These stored samples were analyzed over a period of nineteen days.

Percent Recovery		
Day Analyzed	**Refrigerated**	**Ambient**
1	87.0	87.0
1	93.0	93.0
1	94.0	94.0
1	92.0	92.0
4	92.0	91.0
4	93.0	88.0
4	91.0	89.0
6	92.0	---
6	92.0	---
8	---	92.0
8	---	86.0
10	91.7	---
10	95.5	---
10	95.7	---
11	---	90.0
11	---	82.0
13	78.0	---
13	81.4	---
13	82.4	---
14	---	78.5
14	---	72.1
18	66.0	---
18	68.0	---
19	---	64.0
19	---	77.0

(vii) Breakthrough data.

(A) Breakthrough studies were done at 2 ppm (3.6 mg/m^3) at approximately 85% relative humidity at 22°C (ambient temperature). Two charcoal tubes were used in series. The backup tube was changed every 10 minutes and analyzed for breakthrough. The flow rate was 0.050 Lpm.

Tube No.	Time (minutes)	Percent Breakthrough
1	10	(*)
2	20	(*)
3	30	(*)
4	40	1.23
5	50	3.46
6	60	18.71
7	70	39.2
8	80	53.3
9	90	72.0
10	100	96.0
11	110	113.0
12	120	133.9

*None.

(B) The 5% breakthrough volume was reached when 2.6 liters of test atmosphere were drawn through the charcoal tubes.

(j) References.

(i) "NIOSH Manual of Analytical Methods," 2nd ed. NIOSH: Cincinnati, 1977; Method S 286.

(ii) "IARC Monographs on the Evaluation of Carcinogenic Risk of Chemicals to Man." International Agency for Research on Cancer: Lyon, 1976; Vol. II, p. 157.

(iii) Sax., N.I. "Dangerous Properties of Industrial Materials," 4th ed.; Van Nostrand Reinhold Company, New York, 1975; p. 741.

(iv) "The Condensed Chemical Dictionary," 9th ed.; Hawley, G.G., ed.; Van Nostrand Reinhold Company, New York, 1977; p. 361.

(4) **Summary of other sampling procedures**. OSHA believes that several other types of monitoring equipment and techniques exist for monitoring time-weighted averages. Considerable research and method development is currently being performed, which will lead to improvements and a wider variety of monitoring techniques. A combination of monitoring procedures can be used. There probably is no one best method for monitoring personal exposure to ethylene oxide in all cases. There are advantages, disadvantages, and limitations to each method. The method of choice will depend on the need and requirements. Some commonly used methods include the use of charcoal tubes, passive dosimeters, Tedler gas sampling bags, detector tubes, photoionization detection units, infrared detection units and gas chromatographs. A number of these methods are described below.

(a) Charcoal tube sampling procedures.

(i) Qazi-Ketcham method (Ex-11-133)--This method consists of collecting EtO on Columbia JXC activated carbon, desorbing the EtO with carbon disulfide and analyzing by gas chromatography with flame ionization detection. Union Carbide has recently updated and revalidated this monitoring procedure. This method is capable of determining both eight-hour time-weighted average exposures and short-term exposures. The method was validated to 0.5 ppm. Like other charcoal collecting procedures, the method requires considerable analytical expertise.

(ii) ASTM-proposed method--The Ethylene Oxide Industry Council (EOIC) has contracted with Clayton Environmental Consultants, Inc. to conduct a collaborative study for the proposed method. The ASTM-Proposed method is similar to the method published by Qazi and Ketcham in the November 1977 American Industrial Hygiene Association Journal, and to the method of Pilney and Coyne, presented at the 1979 American Industrial Hygiene Conference. After the air to be sampled is drawn through an activated charcoal tube, the ethylene oxide is desorbed from the tube using carbon disulfide and is quantitated by gas chromatography utilizing a flame ionization detector. The ASTM-proposed method specifies a large two-section charcoal tube, shipment in dry ice, storage at less than -5°C, and analysis within three weeks to prevent migration and sample loss. Two types of charcoal tubes are being tested--Pittsburgh Coconut-Based (PCB) and Columbia JXC charcoal. This collaborative study will give an indication of the inter- and intralaboratory precision and accuracy of the ASTM/proposed method. Several laboratories have considerable expertise using the Qazi-Ketcham and Dow methods.

(b) Passive monitors--Ethylene oxide diffuses into the monitor and is collected in the sampling media. The DuPont Pro-Tek badge collects EtO in an absorbing solution, which is analyzed colorimetrically to determine the amount of EtO present. The 3M 350 badge collects the EtO on chemically treated charcoal. Other passive monitors are currently being developed and tested. Both 3M and DuPont have submitted data indicating their dosimeters meet the precision and accuracy requirements of the proposed ethylene oxide standard. Both presented laboratory validation data to 0.2 ppm (Exs. 11-65, 4-20, 108, 109, 130).

(c) Tedlar gas sampling bags-samples are collected by drawing a known volume of air into a Tedlar gas sampling bag. The ethylene oxide concentration is often determined on-site using a portable gas chromatograph or portable infrared spectometer.

(d) Detector tubes--A known volume of air is drawn through a detector tube using a small hand pump. The concentration of EtO is related to the length of stain developed in the tube. Detector tubes are economical, easy to use, and give an immediate readout. Unfortunately, partly because they are nonspecific, their accuracy is often questionable. Since the sample is taken over a short period of time, they may be useful for determining the source of leaks.

(e) Direct reading instruments:

(i) There are numerous types of direct reading instruments, each having its own strengths and weaknesses (Exs. 135B, 135C, 107, 11-78, 11-153). Many are relatively new, offering greater sensitivity and specificity. Popular ethylene oxide direct reading instruments include infrared detection units, photoionization detection units, and gas chromatographs.

(ii) Portable infrared analyzers provide an immediate, continuous indication of a concentration value; making them particularly useful for locating high concentration pockets, in leak detection and in ambient air monitoring. In infrared detection units, the amount of infrared light absorbed by the gas being analyzed at selected infrared wavelengths is related to the concentration of a particular component. Various models have either fixed or variable infrared filters, differing cell pathlengths, and microcomputer controls for greater sensitivity, automation, and interference elimination.

(iii) A fairly recent detection system is photoionization detection. The molecules are ionized by high energy ultraviolet light. The resulting current is measured. Since different substances have different ionization potentials, other organic compounds may be ionized. The lower the lamp energy, the better the selectivity. As a continuous monitor, photoionization detection can be useful for locating high concentration pockets, in leak detection, and continuous ambient air monitoring. Both portable and stationary gas chromatographs are available with various types of detectors, including photoionization detectors. A gas chromatograph with a photoionization detector retains the photoionization sensitivity, but minimizes or eliminates interferences. For several GC/PID units, the sensitivity is in the 0.1-0.2 ppm EtO range. The GC/PID with microprocessors can sample up to 20 sample points sequentially, calculate and record data, and activate alarms or ventilation systems. Many are quite flexible and can be configured to meet the specific analysis needs for the workplace.

(iv) DuPont presented their laboratory validation data of the accuracy of the Qazi-Ketcham charcoal tube, the PCB charcoal tube, Miran 103 IR analyzer, 3M #3550 monitor and the DuPont C-70 badge. Quoting Elbert V. Kring:

(v) We also believe that OSHA's proposed accuracy in this standard is appropriate. At plus or minus 25 percent at one part per million, and plus or minus 35 percent below that. And, our data indicates there's only one monitoring method, right now, that we've tested thoroughly, that meets that accuracy requirements. That is the DuPont Pro-Tek badge* * *. We also believe that this kind of data should be confirmed by another independent laboratory, using the same type dynamic chamber testing (Tr. 1470).

Additional data by an independent laboratory following their exact protocol was not submitted. However, information was submitted on comparisons and precision and accuracy of those monitoring procedures which indicate far better precision and accuracy of those monitoring procedures than that obtained by DuPont (Ex. 4-20, 130, 11-68, 11-133, 130, 135A).

(vi) The accuracy of any method depends to a large degree upon the skills and experience of those who not only collect the samples but also those who analyze the samples. Even for methods that are collaboratively tested, some laboratories are closer to the true values than others. Some laboratories may meet the precision and accuracy requirements of the method; others may consistently far exceed them for the same method.

WAC 296-62-074 Cadmium.

WAC 296-62-07401 Scope.

This standard applies to all occupational exposures to cadmium and cadmium compounds, in all forms, and in all industries covered by the Washington Industrial Safety and Health Act, except the construction-related industries, which are covered under WAC 296-155-174.

WAC 296-62-07403 Definitions.

Action level (**AL**). An airborne concentration of cadmium of 2.5 micrograms per cubic meter of air (2.5 $\mu g/m^3$), calculated as an 8-hour time-weighted average (TWA).

Authorized person. Any person authorized by the employer and required by work duties to be present in regulated areas or any person authorized by the WISH Act or regulations issued under it to be in regulated areas.

Director. The director of the department of labor and industries, or authorized representatives.

Employee exposure and similar language referring to the air cadmium level to which an employee is exposed. The exposure to airborne cadmium that would occur if the employee were not using respiratory protective equipment.

Final medical determination. The written medical opinion of the employee's health status by the examining physician under WAC 296-62-07423(3) through (12) or, if multiple physician review under WAC 296-62-07423(13) or the alternative physician determination under WAC 296-62-07423(14) is invoked, it is the final, written medical finding, recommendation or determination that emerges from that process.

High-efficiency particulate air (HEPA) filter. A filter capable of trapping and retaining at least 99.97 percent of mono-dispersed particles of 0.3 micrometers in diameter.

Regulated area. An area demarcated by the employer where an employee's exposure to airborne concentrations of cadmium exceeds, or can reasonably be expected to exceed the permissible exposure limit (PEL).

WAC 296-62-07405 Permissible exposure limit (PEL).

The employer must ensure that no employee is exposed to an airborne concentration of cadmium in excess of five micrograms per cubic meter of air (5 $\mu g/m^3$), calculated as an 8-hour time-weighted average exposure (TWA).

WAC 296-62-07407 Exposure monitoring.

(1) **General**.

(a) Each employer who has a workplace or work operation covered by this section must determine if any employee may be exposed to cadmium at or above the action level.

(b) Determinations of employee exposure must be made from breathing zone air samples that reflect the monitored employee's regular, daily 8-hour TWA exposure to cadmium.

(c) 8-hour TWA exposures must be determined for each employee on the basis of one or more personal breathing zone air samples reflecting full shift exposure on each shift, for each job classification, in each work area. Where several employees perform the same job tasks, in the same job classification, on the same shift, in the same work area, and the length, duration, and level of cadmium exposures are similar, an employer may sample a representative fraction of the employees instead of all employees in order to meet this requirement. In representative sampling, the employer must sample the employee(s) expected to have the highest cadmium exposures.

(2) **Specific**.

(a) Initial monitoring. Except as provided for in (b) and (c) of this subsection, the employer must monitor employee exposures and must base initial determinations on the monitoring results.

(b) Where the employer has monitored after September 14, 1991, under conditions that in all important aspects closely resemble those currently prevailing and where that monitoring satisfies all other requirements of this section, including the accuracy and confidence levels of subsection (6) of this section, the employer may rely on such earlier monitoring results to satisfy the requirements of WAC 296-62-07427 (2)(a).

(c) Where the employer has objective data, as defined in WAC 296-62-07427(2), demonstrating that employee exposure to cadmium will not exceed the action level under the expected conditions of processing, use, or handling, the employer may rely upon such data instead of implementing initial monitoring.

(3) **Monitoring frequency (periodic monitoring)**.

(a) If the initial monitoring or periodic monitoring reveals employee exposures to be at or above the action level, the employer must monitor at a frequency and pattern needed to represent the levels of exposure of employees and where exposures are above the PEL to ensure the adequacy of respiratory selection and the effectiveness of engineering and work-practice controls.

However, such exposure monitoring must be performed at least every six months. The employer, at a minimum, must continue these semiannual measurements unless and until the conditions set out in (b) of this subsection are met.

(b) If the initial monitoring or the periodic monitoring indicates that employee exposures are below the action level and that result is confirmed by the results of another monitoring taken at least seven days later, the employer may discontinue the monitoring for those employees whose exposures are represented by such monitoring.

(4) **Additional monitoring**. The employer also must institute the exposure monitoring required under (2)(a) and (3) of this section whenever there has been a change in the raw materials, equipment, personnel, work-practices, or finished products that may result in additional employees being exposed to cadmium at or above the action level or in employees already exposed to cadmium at or above the action level being exposed above the PEL, or whenever the employer has any reason to suspect that any other change might result in such further exposure.

(5) **Employee notification of monitoring results**.

(a) Within fifteen working days after the receipt of the results of any monitoring performed under this section, the employer must notify each affected employee individually in writing of the results. In addition, within the same time period the employer must post the results of the exposure monitoring in an appropriate location that is accessible to all affected employees.

(b) Wherever monitoring results indicate that employee exposure exceeds the PEL, the employer must include in the written notice a statement that the PEL has been exceeded and a description of the corrective action being taken by the employer to reduce employee exposure to or below the PEL.

(6) **Accuracy of measurement**. The employer must use a method of monitoring and analysis that has an accuracy of not less than plus or minus twenty-five percent, with a confidence level of ninety-five percent, for airborne concentrations of cadmium at or above the action level, the permissible exposure limit (PEL), and the separate engineering control air limit (SECAL).

WAC 296-62-07409 Regulated areas.

(1) **Establishment**. The employer must establish a regulated area wherever an employee's exposure to airborne concentrations of cadmium is, or can reasonably be expected to be in excess of the permissible exposure limit (PEL).

(2) **Demarcation**. Regulated areas must be demarcated from the rest of the workplace in any manner that adequately establishes and alerts employees of the boundaries of the regulated area.

(3) **Access**. Access to regulated areas must be limited to authorized persons.

(4) **Provision of respirators**. Each person entering a regulated area must be supplied with and required to use a respirator, selected in accordance with WAC 296-62-07413(2).

(5) **Prohibited activities**. The employer must ensure that employees do not eat, drink, smoke, chew tobacco or gum, or apply cosmetics in regulated areas, carry the products associated with these activities into regulated areas, or store such products in those areas.

WAC 296-62-07411 Methods of compliance.

(1) **Compliance hierarchy**.

(a) Except as specified in (b), (c), and (d) of this subsection, the employer must implement engineering and work-practice controls to reduce and maintain employee exposure to cadmium at or below the PEL, except to the extent that the employer can demonstrate that such controls are not feasible.

(b) Except as specified in (c) and (d) of this subsection, in industries where a separate engineering control air limit (SECAL) has been specified for particular processes (Table I of this subsection), the employer must implement engineering and work-practice controls to reduce and maintain employee exposure at or below the SECAL, except to the extent that the employer can demonstrate that such controls are not feasible.

Table I.--Separate Engineering Control Airborne Limits (SECALs) for Processes in Selected Industries (SECALs)

Process	SECAL	(µg/m^3)
Nickel Cadmium battery	Plate making, plate preparation All other processes	50 15
Zinc/Cadmium refining	Cadmium refining, casting, melting. oxide production, sinter plant	50
Pigment manufacture	Calcine, crushing, milling, blending All other processes	50 15
Stabilizers	Cadmium oxice charging, crushing, drying, blending	50
Lead smelting+	Sinter plant, blast furnace, baghouse, yard area	50
Plating*	Mechanical plating	15

* Processes in these industries that are not specified in this table must achieve the PEL using engineering controls and work-practices as required in (a) of this subsection.

(c) The requirement to implement engineering and work-practice controls to achieve the PEL or, where applicable, the SECAL does not apply where the employer demonstrates the following:

(i) The employee is only intermittently exposed; and

(ii) The employee is not exposed above the PEL on thirty or more days per year (twelve consecutive months).

(d) Wherever engineering and work-practice controls are required and are not sufficient to reduce employee exposure to or below the PEL or, where applicable, the SECAL, the employer nonetheless must implement such controls to reduce exposures to the lowest levels achievable. The employer must supplement such controls with respiratory protection that complies with the requirements of WAC 296-62-07413 and the PEL.

(e) The employer must not use employee rotation as a method of compliance.

(2) **Compliance program**.

(a) Where the PEL is exceeded, the employer must establish and implement a written compliance program to reduce employee exposure to or below the PEL by means of engineering and work-practice controls, as required by subsection (1) of this section. To the extent that engineering and work-practice controls cannot reduce exposures to or below the PEL, the employer must include in the written compliance program the use of appropriate respiratory protection to achieve compliance with the PEL.

(b) Written compliance programs must include at least the following:

(i) A description of each operation in which cadmium is emitted; e.g., machinery used, material processed, controls in place, crew size, employee job responsibilities, operating procedures, and maintenance practices;

(ii) A description of the specific means that will be employed to achieve compliance, including engineering plans and studies used to determine methods selected for controlling exposure to cadmium, as well as, where necessary, the use of appropriate respiratory protection to achieve the PEL;

(iii) A report of the technology considered in meeting the PEL;

(iv) Air monitoring data that document the sources of cadmium emissions;

(v) A detailed schedule for implementation of the program, including documentation such as copies of purchase orders for equipment, construction contracts, etc.;

(vi) A work-practice program that includes items required under WAC 296-62-07415, 296-62-07417, and 296-62-07419;

(vii) A written plan for emergency situations, as specified in WAC 296-62-07415; and

(viii) Other relevant information.

(c) The written compliance programs must be reviewed and updated at least annually, or more often if necessary, to reflect significant changes in the employer's compliance status.

(d) Written compliance programs must be provided upon request for examination and copying to affected employees, designated employee representatives, and the director.

(3) **Mechanical ventilation**.

(a) When ventilation is used to control exposure, measurements that demonstrate the effectiveness of the system in controlling exposure, such as capture velocity, duct velocity, or static pressure must be made as necessary to maintain its effectiveness.

(b) Measurements of the system's effectiveness in controlling exposure must be made as necessary within five working days of any change in production, process, or control that might result in a significant increase in employee exposure to cadmium.

(c) Recirculation of air. If air from exhaust ventilation is recirculated into the workplace, the system must have a high efficiency filter and be monitored to ensure effectiveness.

(d) Procedures must be developed and implemented to minimize employee exposure to cadmium when maintenance of ventilation systems and changing of filters is being conducted.

WAC 296-62-07413 Respirator protection.

(1) **General**. For employees who use respirators required by this section, the employer must provide each employee an appropriate respirator that complies with the requirements of this subsection. Respirators must be used during:

(a) Periods necessary to install or implement feasible engineering and work-practice controls when employee exposure levels exceed the PEL;

(b) Maintenance and repair activities, and brief or intermittent operations, where employee exposures exceed the PEL and engineering and work-practice controls are not feasible or are not required;

(c) Activities in regulated areas as specified in WAC 296-62-07409;

(d) Work operations for which the employer has implemented all feasible engineering and work-practice controls and such controls are not sufficient to reduce employee exposures to or below the PEL;

(e) Work operations for which an employee who is exposed to cadmium at or above the action level, and the employee requests a respirator;

(f) Work operations for which an employee is exposed above the PEL and engineering controls are not required by WAC 296-62-07411(1)(b); and

(g) Emergencies.

(2) **Respirator program**.

(a) The employer must develop, implement and maintain a respiratory protection program as required by chapter 296-842 WAC, Respirators, which covers each employee required by this chapter to use a respirator.

(b) No employees must use a respirator if, based on their recent medical examination, the examining physician determines that they will be unable to continue to function normally while using a respirator. If the physician determines that the employee must be limited in, or removed from, their current job because of their inability to use a respirator, the limitation or removal must be in accordance with WAC 296-62-07423(11) and (12).

(c) If an employee has breathing difficulty during fit testing or respirator use, the employer must provide the employee with a medical examination as required by WAC 296-62-07423(6)(b) to determine if the employee can use a respirator while performing the required duties.

(3) **Respirator selection**. The employer must:

(a) Select and provide the appropriate respirator as specified in this section and WAC 296-842-13005 found in the respirator rule.

(i) Provide employees with full-facepiece respirators when they experience eye irritation.

(ii) Make sure high-efficiency particulate air (HEPA) filters or N-, R-, or P-100 series filters are provided for powered air-purifying respirators (PAPRs) and negative-pressure air-purifying respirators.

(b) Provide an employee with a powered, air-purifying respirator (PAPR) instead of a negative-pressure respirator when an employee who is entitled to a respirator chooses to use this type of respirator, and such a respirator provides adequate protection to the employee.

WAC 296-62-07415 Emergency situations.

The employer must develop and implement a written plan for dealing with emergency situations involving substantial releases of airborne cadmium. The plan must include provisions for the use of appropriate respirators and personal protective equipment. In addition, employees not essential to correcting the emergency situation must be restricted from the area and normal operations halted in that area until the emergency is abated.

WAC 296-62-07417 Protective work clothing and equipment.

(1) **Provision and use**. If an employee is exposed to airborne cadmium above the PEL or where skin or eye irritation is associated with cadmium exposure at any level, the employer must provide at no cost to the employee, and ensure that the employee uses, appropriate protective work clothing and equipment that prevents contamination of the employee and the employee's garments. Protective work clothing and equipment includes, but is not limited to:

(a) Coveralls or similar full-body work clothing;

(b) Gloves, head coverings, and boots or foot coverings; and

(c) Face shields, vented goggles, or other appropriate protective equipment that complies with WAC 296-800-160.

(2) **Removal and storage**.

(a) The employer must ensure that employees remove all protective clothing and equipment contaminated with cadmium at the completion of the work shift and do so only in change rooms provided in accordance with WAC 296-62-07419(1).

(b) The employer must ensure that no employee takes cadmium-contaminated protective clothing or equipment from the workplace, except for employees authorized to do so for purposes of laundering, cleaning, maintaining, or disposing of cadmium contaminated protective clothing and equipment at an appropriate location or facility away from the workplace.

(c) The employer must ensure that contaminated protective clothing and equipment, when removed for laundering, cleaning, maintenance, or disposal, is placed and stored in sealed, impermeable bags or other closed, impermeable containers that are designed to prevent dispersion of cadmium dust.

(d) The employer must ensure that bags or containers of contaminated protective clothing and equipment that are to be taken out of the change rooms or the workplace for laundering, cleaning, maintenance, or disposal must bear labels in accordance with WAC 296-62-07425(3).

(3) **Cleaning, replacement, and disposal**.

(a) The employer must provide the protective clothing and equipment required by subsection (1) of this section in a clean and dry condition as often as necessary to maintain its effectiveness, but in any event at least weekly. The employer is responsible for cleaning and laundering the protective clothing and equipment required by this paragraph to maintain its effectiveness and is also responsible for disposing of such clothing and equipment.

(b) The employer also is responsible for repairing or replacing required protective clothing and equipment as needed to maintain its effectiveness. When rips or tears are detected while an employee is working they must be immediately mended, or the work suit must be immediately replaced.

(c) The employer must prohibit the removal of cadmium from protective clothing and equipment by blowing, shaking, or any other means that disperses cadmium into the air.

(d) The employer must ensure that any laundering of contaminated clothing or cleaning of contaminated equipment in the workplace is done in a manner that prevents the release of airborne cadmium in excess of the permissible exposure limit prescribed in WAC 296-62-07405.

(e) The employer must inform any person who launders or cleans protective clothing or equipment contaminated with cadmium of the potentially harmful effects of exposure to cadmium and that the clothing and equipment should be laundered or cleaned in a manner to effectively prevent the release of airborne cadmium in excess of the PEL.

WAC 296-62-07419 Hygiene areas and practices.

(1) **General**. For employees whose airborne exposure to cadmium is above the PEL, the employer must provide clean change rooms, handwashing facilities, showers, and lunchroom facilities that comply with WAC 296-800-230.

(2) **Change rooms**. The employer must ensure that change rooms are equipped with separate storage facilities for street clothes and for protective clothing and equipment, which are designed to prevent dispersion of cadmium and contamination of the employee's street clothes.

(3) **Showers and handwashing facilities**.

(a) The employer must ensure that employees who are exposed to cadmium above the PEL shower during the end of the work shift.

(b) The employer must ensure that employees whose airborne exposure to cadmium is above the PEL wash their hands and faces prior to eating, drinking, smoking, chewing tobacco or gum, or applying cosmetics.

(4) **Lunchroom facilities**.

(a) The employer must ensure that the lunchroom facilities are readily accessible to employees, that tables for eating are maintained free of cadmium, and that no employee in a lunchroom facility is exposed at any time to cadmium at or above a concentration of 2.5 $\mu g/m^3$.

(b) The employer must ensure that employees do not enter lunchroom facilities with protective work clothing or equipment unless surface cadmium has been removed from the clothing and equipment by HEPA vacuuming or some other method that removes cadmium dust without dispersing it.

WAC 296-62-07421 Housekeeping.

(1) All surfaces must be maintained as free as practicable of accumulations of cadmium.

(2) All spills and sudden releases of material containing cadmium must be cleaned up as soon as possible.

(3) Surfaces contaminated with cadmium must, wherever possible, be cleaned by vacuuming or other methods that minimize the likelihood of cadmium becoming airborne.

(4) HEPA-filtered vacuuming equipment or equally effective filtration methods must be used for vacuuming. The equipment must be used and emptied in a manner that minimizes the reentry of cadmium into the workplace.

(5) Shoveling, dry or wet sweeping, and brushing may be used only where vacuuming or other methods that minimize the likelihood of cadmium becoming airborne have been tried and found not to be effective.

(6) Compressed air must not be used to remove cadmium from any surface unless the compressed air is used in conjunction with a ventilation system designed to capture the dust cloud created by the compressed air.

(7) Waste, scrap, debris, bags, containers, personal protective equipment, and clothing contaminated with cadmium and consigned for disposal must be collected and disposed of in sealed impermeable bags or other closed, impermeable containers. These bags and containers must be labeled in accordance with WAC 296-62-07425(3).

WAC 296-62-07423 Medical surveillance.

(1) **General**.

(a) Scope.

(i) Currently exposed. The employer must institute a medical surveillance program for all employees who are or may be exposed to cadmium at or above the action level unless the employer demonstrates that the employee is not, and will not be, exposed at or above the action level on thirty or more days per year (twelve consecutive months); and

(ii) Previously exposed. The employer must also institute a medical surveillance program for all employees who prior to the effective date of this section might previously have been exposed to cadmium at or above the action level by the employer, unless the employer demonstrates that the employee did not prior to the effective date of this section work for the employer in jobs with exposure to cadmium for an aggregated total of more than sixty months.

(b) To determine an employee's fitness for using a respirator, the employer must provide the limited medical examination specified in subsection (6) of this section.

(c) The employer must ensure that all medical examinations and procedures required by this standard are performed by or under the supervision of a licensed physician, who has read and is familiar with the health effects WAC 296-62-07441, Appendix A, the regulatory text of this section, the protocol for sample handling and laboratory selection in WAC 296-62-07451, Appendix F and the questionnaire of WAC 296-62-07447, Appendix D. These examinations and procedures must be provided without cost to the employee and at a time and place that is reasonable and convenient to employees.

(d) The employer must ensure that the collecting and handling of biological samples of cadmium in urine (CdU), cadmium in blood (CdB), and beta-2 microglobulin in urine (ß2-M) taken from employees under this section is done in a manner that ensures their reliability and that analysis of biological samples of cadmium in urine (CdU), cadmium in blood (CdB), and beta-2 microglobulin in urine (ß2-M) taken from employees under this section is performed in laboratories with demonstrated proficiency for that particular analyte. (See WAC 296-62-07451, Appendix F.)

(2) **Initial examination**.

(a) The employer must provide an initial (preplacement) examination to all employees covered by the medical surveillance program required in subsection (1)(a) of this section. The examination must be provided to those employees within thirty days after initial assignment to a job with exposure to cadmium or no later than ninety days after the effective date of this section, whichever date is later.

(b) The initial (preplacement) medical examination must include:

(i) A detailed medical and work history, with emphasis on: Past, present, and anticipated future exposure to cadmium; any history of renal, cardiovascular, respiratory, hematopoietic, reproductive, and/or musculo-skeletal system dysfunction; current usage of medication with potential nephrotoxic side-effects; and smoking history and current status; and

(ii) Biological monitoring that includes the following tests:

(A) Cadmium in urine (CdU), standardized to grams of creatinine (g/Cr);

(B) Beta-2 microglobulin in urine (ß2-M), standardized to grams of creatinine (g/Cr), with pH specified, as described in WAC 296-62-07451, Appendix F; and

(C) Cadmium in blood (CdB), standardized to liters of whole blood (lwb).

(c) Recent examination: An initial examination is not required to be provided if adequate records show that the employee has been examined in accordance with the requirements of (b) of this subsection within the past twelve months. In that case, such records must be maintained as part of the employee's medical record and the prior exam must be treated as if it were an initial examination for the purposes of subsections (3) and (4) of this section.

(3) **Actions triggered by initial biological monitoring**:

(a) If the results of the initial biological monitoring tests show the employee's CdU level to be at or below 3 µg/g Cr, ß2-M level to be at or below 300 µg/g Cr and CdB level to be at or below 5 µg/lwb, then:

(i) For currently exposed employees, who are subject to medical surveillance under subsection (1)(a)(i) of this section, the employer must provide the minimum level of periodic medical surveillance in accordance with the requirements in subsection (4)(a) of this section; and

(ii) For previously exposed employees, who are subject to medical surveillance under subsection (1)(a)(ii) of this section, the employer must provide biological monitoring for CdU, ß2-M, and CdB one year after the initial biological monitoring and then the employer must comply with the requirements of subsection (4)(e) of this section.

(b) For all employees who are subject to medical surveillance under subsection (1)(a) of this section, if the results of the initial biological monitoring tests show the level of CdU to exceed 3 µg/g Cr, the level of ß2-M to exceed 300 µg/g Cr, or the level of CdB to exceed 5 µg/lwb, the employer must:

(i) Within two weeks after receipt of biological monitoring results, reassess the employee's occupational exposure to cadmium as follows:

(A) Reassess the employee's work-practices and personal hygiene;

(B) Reevaluate the employee's respirator use, if any, and the respirator program;

(C) Review the hygiene facilities;

(D) Reevaluate the maintenance and effectiveness of the relevant engineering controls;

(E) Assess the employee's smoking history and status;

(ii) Within thirty days after the exposure reassessment, specified in (b)(i) of this subsection, take reasonable steps to correct any deficiencies found in the reassessment that may be responsible for the employee's excess exposure to cadmium; and,

(iii) Within ninety days after receipt of biological monitoring results, provide a full medical examination to the employee in accordance with the requirements of WAC 296-62-07423 (4)(b). After completing the medical examination, the examining physician must determine in a written medical opinion whether to medically remove the employee. If the physician determines that medical removal is not necessary, then until the employee's CdU level falls to or below 3 µg/g Cr, ß2-M level falls to or below 300 µg/g Cr and CdB level falls to or below 5 µg/lwb, the employer must:

(A) Provide biological monitoring in accordance with subsection (2)(b)(ii) of this section on a semiannual basis; and

(B) Provide annual medical examinations in accordance with subsection (4)(b) of this section.

(c) For all employees who are subject to medical surveillance under subsection (1)(a) of this section, if the results of the initial biological monitoring tests show the level of CdU to be in excess of 15 µg/g Cr, or the level of CdB to be in excess of 15 µg/lwb, or the level of ß2-M to be in excess of 1,500 µg/g Cr, the employer must comply with the requirements of (b)(i) and (ii) of this subsection. Within ninety days after receipt of biological monitoring results, the employer must provide a full medical examination to the employee in accordance with the requirements of subsection (4)(b) of this section. After completing the medical examination, the examining physician must determine in a written medical opinion whether to medically remove the employee. However, if the initial biological monitoring results and the biological monitoring results obtained during the medical examination both show that: CdU exceeds 15 µg/g Cr; or CdB exceeds 15 µg/lwb; or ß2-M exceeds 1500 µg/g Cr, and in addition CdU exceeds 3 µg/g Cr or CdB exceeds 5 µg/liter of whole blood, then the physician must medically remove the employee from exposure to cadmium at or above the action level. If the second set of biological monitoring results obtained during the medical examination does not show that a mandatory removal trigger level has been exceeded, then the employee is not required to be removed by the mandatory provisions of this section.

If the employee is not required to be removed by the mandatory provisions of this section or by the physician's determination, then until the employee's CdU level falls to or below 3 µg/g Cr, ß2-M level falls to or below 300 µg/g Cr and CdB level falls to or below 5 µg/lwb, the employer must:

(i) Periodically reassess the employee's occupational exposure to cadmium;

(ii) Provide biological monitoring in accordance with subsection (2)(b)(ii) of this section on a quarterly basis; and

(iii) Provide semiannual medical examinations in accordance with subsection (4)(b) of this section.

(d) For all employees to whom medical surveillance is provided, beginning on January 1, 1999, and in lieu of (a) through (c) of this subsection:

(i) If the results of the initial biological monitoring tests show the employee's CdU level to be at or below 3 µg/g Cr, ß2-M level to be at or below 300 µg/g Cr and CdB level to be at or below 5 µg/lwb, then for currently exposed employees, the employer must comply with the requirements of (a)(i) of this subsection and for previously exposed employees, the employer must comply with the requirements of (a)(ii) of this subsection;

(ii) If the results of the initial biological monitoring tests show the level of CdU to exceed 3 µg/g Cr, the level of ß2-M to exceed 300 µg/g Cr, or the level of CdB to exceed 5 µg/lwb, the employer must comply with the requirements of (b)(i) through (iii) of this subsection; and

(iii) If the results of the initial biological monitoring tests show the level of CdU to be in excess of 7 µg/g Cr, or the level of CdB to be in excess of 10 µg/lwb, or the level of ß2-M to be in excess of 750 µg/g Cr, the employer must: Comply with the requirements of (b)(i) through (ii) of this subsection; and, within ninety days after receipt of biological monitoring results, provide a full medical examination to the employee in accordance with the requirements of subsection (4)(b) of this section. After completing the medical examination, the examining physician must determine in a written medical opinion whether to medically remove the employee. However, if the initial biological monitoring results and the biological monitoring results obtained during the medical examination both show that: CdU exceeds 7 µg/g Cr; or CdB exceeds 10 µg/lwb; or ß2-M exceeds 750 µg/g Cr, and in addition CdU exceeds 3 µg/g Cr or CdB exceeds 5 µg/liter of whole blood, then the physician must medically remove the employee from exposure to cadmium at or above the action level. If the second set of biological monitoring results obtained during the medical examination does not show that a mandatory removal trigger level has been exceeded, then the employee is not required to be removed by the mandatory provisions of this section. If the employee is not required to be removed by the mandatory provisions of this section or by the physician's determination, then until the employee's CdU level falls to or below 3 µg/g Cr, ß2-M level falls to or below 300 µg/g Cr and CdB level falls to or below 5 µg/lwb, the employer must: Periodically reassess the employee's occupational exposure to cadmium; provide biological monitoring in accordance with subsection (2)(b)(ii) of this section on a quarterly basis; and provide semiannual medical examinations in accordance with subsection (4)(b) of this section.

(4) **Periodic medical surveillance**.

(a) For each employee who is covered under subsection (1)(a)(i) of this section, the employer must provide at least the minimum level of periodic medical surveillance, which consists of periodic medical examinations and periodic biological monitoring. A periodic medical examination must be provided within one year after the initial examination required by subsection (2) of this section and thereafter at least biennially. Biological sampling must be provided at least annually, either as part of a periodic medical examination or separately as periodic biological monitoring.

(b) The periodic medical examination must include:

(i) A detailed medical and work history, or update thereof, with emphasis on: Past, present and anticipated future exposure to cadmium; smoking history and current status; reproductive history; current use of medications with potential nephrotoxic side-effects; any history of renal, cardiovascular, respiratory, hematopoietic, and/or musculo-skeletal system dysfunction; and as part of the medical and work history, for employees who wear respirators, questions 3-11 and 25-32 in WAC 296-62-07447, Appendix D;

(ii) A complete physical examination with emphasis on: Blood pressure, the respiratory system, and the urinary system;

(iii) A 14 inch by 17 inch, or a reasonably standard sized posterior-anterior chest X-ray (after the initial X-ray, the frequency of chest X-rays is to be determined by the examining physician);

(iv) Pulmonary function tests, including forced vital capacity (FVC) and forced expiratory volume at 1 second (FEV_1);

(v) Biological monitoring, as required in subsection (2)(b)(ii) of this section;

(vi) Blood analysis, in addition to the analysis required under this section, including blood urea nitrogen, complete blood count, and serum creatinine;

(vii) Urinalysis, in addition to the analysis required under subsection (2)(b)(ii) of this section, including the determination of albumin, glucose, and total and low molecular weight proteins;

(viii) For males over forty years old, prostate palpation, or other at least as effective diagnostic test(s); and

(ix) Any additional tests deemed appropriate by the examining physician.

(c) Periodic biological monitoring must be provided in accordance with subsection (2)(b)(ii) of this section.

(d) If the results of periodic biological monitoring or the results of biological monitoring performed as part of the periodic medical examination show the level of the employee's CdU, ß2-M, or CdB to be in excess of the levels specified in subsection (3)(b) or (c) of this section; or, beginning on January 1, 1999, in excess of the levels specified in subsection (3)(b) or (d) of this section, the employer must take the appropriate actions specified in subsection (3)(b) through (d) of this section.

(e) For previously exposed employees under subsection (1)(a)(ii) of this section:

(i) If the employee's levels of CdU did not exceed 3 µg/g Cr, CdB did not exceed 5 µg/lwb, and ß2-M did not exceed 300 µg/g Cr in the initial biological monitoring tests, and if the results of the follow-up biological monitoring required by subsection (3)(a)(ii) of this section one year after the initial examination confirm the previous results, the employer may discontinue all periodic medical surveillance for that employee.

(ii) If the initial biological monitoring results for CdU, CdB, or ß2-M were in excess of the levels specified in subsection (3)(a) of this section, but subsequent biological monitoring results required by subsection (3)(b) through (e) of this section show that the employee's CdU levels no longer exceed 3 µg/g Cr, CdB levels no longer exceed 5 µg/lwb, and ß2-M levels no longer exceed 300 µg/g Cr, the employer must provide biological monitoring for CdU, CdB, and ß2-M one year after these most recent biological monitoring results. If the results of the follow-up biological monitoring, specified in this section, confirm the previous results, the employer may discontinue all periodic medical surveillance for that employee.

(iii) However, if the results of the follow-up tests specified in (e)(i) or (ii) of this subsection indicate that the level of the employee's CdU, ß2-M, or CdB exceeds these same levels, the employer is required to provide annual medical examinations in accordance with the provisions of (b) of this subsection until the results of biological monitoring are consistently below these levels or the examining physician determines in a written medical opinion that further medical surveillance is not required to protect the employee's health.

(f) A routine, biennial medical examination is not required to be provided in accordance with subsections (3)(a) and (4) of this section if adequate medical records show that the employee has been examined in accordance with the requirements of (b) of this subsection within the past twelve months. In that case, such records must be maintained by the employer as part of the employee's medical record, and the next routine, periodic medical examination must be made available to the employee within two years of the previous examination.

(5) **Actions triggered by medical examinations**. If the results of a medical examination carried out in accordance with this section indicate any laboratory or clinical finding consistent with cadmium toxicity that does not require employer action under subsections (2), (3), or (4) of this section, the employer, within thirty days, must reassess the employee's occupational exposure to cadmium and take the following corrective action until the physician determines they are no longer necessary:

(a) Periodically reassess: The employee's work-practices and personal hygiene; the employee's respirator use, if any; the employee's smoking history and status; the respiratory protection program; the hygiene facilities; and the maintenance and effectiveness of the relevant engineering controls;

(b) Within thirty days after the reassessment, take all reasonable steps to correct the deficiencies found in the reassessment that may be responsible for the employee's excess exposure to cadmium;

(c) Provide semiannual medical reexaminations to evaluate the abnormal clinical sign(s) of cadmium toxicity until the results are normal or the employee is medically removed; and

(d) Where the results of tests for total proteins in urine are abnormal, provide a more detailed medical evaluation of the toxic effects of cadmium on the employee's renal system.

(6) **Examination for respirator use**.

(a) To determine an employee's fitness for respirator use, the employer must provide a medical examination that includes the elements specified in (a)(i) through (iv) of this subsection. This examination must be provided prior to the employee's being assigned to a job that requires the use of a respirator or no later than ninety days after this section goes into effect, whichever date is later, to any employee without a medical examination within the preceding twelve months that satisfies the requirements of this paragraph.

(i) A detailed medical and work history, or update thereof, with emphasis on: Past exposure to cadmium; smoking history and current status; any history of renal, cardiovascular, respiratory, hematopoietic, and/or musculoskeletal system dysfunction; a description of the job for which the respirator is required; and questions 3 through 11 and 25 through 32 in WAC 296-62-07447, Appendix D;

(ii) A blood pressure test;

(iii) Biological monitoring of the employee's levels of CdU, CdB and ß2-M in accordance with the requirements of subsection (2)(b)(ii) of this section, unless such results already have been obtained within the previous twelve months; and

(iv) Any other test or procedure that the examining physician deems appropriate.

(b) After reviewing all the information obtained from the medical examination required in (a) of this subsection, the physician must determine whether the employee is fit to wear a respirator.

(c) Whenever an employee has exhibited difficulty in breathing during a respirator fit test or during use of a respirator, the employer, as soon as possible, must provide the employee with a periodic medical examination in accordance with subsection (4)(b) of this section to determine the employee's fitness to wear a respirator.

(d) Where the results of the examination required under (a), (b), or (c) of this subsection are abnormal, medical limitation or prohibition of respirator use must be considered. If the employee is allowed to wear a respirator, the employee's ability to continue to do so must be periodically evaluated by a physician.

(7) **Emergency examinations**.

(a) In addition to the medical surveillance required in subsections (2) through (6) of this section, the employer must provide a medical examination as soon as possible to any employee who may have been acutely exposed to cadmium because of an emergency.

(b) The examination must include the requirements of subsection (4)(b) of this section, with emphasis on the respiratory system, other organ systems considered appropriate by the examining physician, and symptoms of acute overexposure, as identified in WAC 296-62-07441 (2)(b)(i) through (ii) and (4), Appendix A.

(8) **Termination of employment examination**.

(a) At termination of employment, the employer must provide a medical examination in accordance with subsection (4)(b) of this section, including a chest x-ray, to any employee to whom at any prior time the employer was required to provide medical surveillance under subsection (1)(a) or (7) of this section. However, if the last examination satisfied the requirements of subsection (4)(b) of this section and was less than six months prior to the date of termination, no further examination is required unless otherwise specified in subsection (3) or (5) of this section;

(b) However, for employees covered by subsection (1)(a)(ii) of this section, if the employer has discontinued all periodic medical surveillance under subsection (4)(e) of this section, no termination of employment medical examination is required.

(9) **Information provided to the physician**. The employer must provide the following information to the examining physician:

(a) A copy of this standard and appendices;

(b) A description of the affected employee's former, current, and anticipated duties as they relate to the employee's occupational exposure to cadmium;

(c) The employee's former, current, and anticipated future levels of occupational exposure to cadmium;

(d) A description of any personal protective equipment, including respirators, used or to be used by the employee, including when and for how long the employee has used that equipment; and

(e) Relevant results of previous biological monitoring and medical examinations.

(10) **Physician's written medical opinion**.

(a) The employer must promptly obtain a written, signed medical opinion from the examining physician for each medical examination performed on each employee. This written opinion must contain:

(i) The physician's diagnosis for the employee;

(ii) The physician's opinion as to whether the employee has any detected medical condition(s) that would place the employee at increased risk of material impairment to health from further exposure to cadmium, including any indications of potential cadmium toxicity;

(iii) The results of any biological or other testing or related evaluations that directly assess the employee's absorption of cadmium;

(iv) Any recommended removal from, or limitation on the activities or duties of the employee or on the employee's use of personal protective equipment, such as respirators;

(v) A statement that the physician has clearly and carefully explained to the employee the results of the medical examination, including all biological monitoring results and any medical conditions related to cadmium exposure that require further evaluation or treatment, and any limitation on the employee's diet or use of medications.

(b) The employer promptly must obtain a copy of the results of any biological monitoring provided by an employer to an employee independently of a medical examination under subsections (2) and (4) of this section, and, in lieu of a written medical opinion, an explanation sheet explaining those results.

(c) The employer must instruct the physician not to reveal orally or in the written medical opinion given to the employer specific findings or diagnoses unrelated to occupational exposure to cadmium.

(11) **Medical removal protection (MRP)**.

(a) General.

(i) The employer must temporarily remove an employee from work where there is excess exposure to cadmium on each occasion that medical removal is required under subsection (3), (4), or (6) of this section and on each occasion that a physician determines in a written medical opinion that the employee should be removed from such exposure. The physician's determination may be based on biological monitoring results, inability to wear a respirator, evidence of illness, other signs or symptoms of cadmium-related dysfunction or disease, or any other reason deemed medically sufficient by the physician.

(ii) The employer must medically remove an employee in accordance with this subsection regardless of whether at the time of removal a job is available into which the removed employee may be transferred.

(iii) Whenever an employee is medically removed under this subsection, the employer must transfer the removed employee to a job where the exposure to cadmium is within the permissible levels specified in that subsection as soon as one becomes available.

(iv) For any employee who is medically removed under the provisions of (a) of this subsection, the employer must provide follow-up biological monitoring in accordance with subsection (2)(b)(ii) of this section at least every three months and follow-up medical examinations semiannually at least every six months until in a written medical opinion the examining physician determines that either the employee may be returned to their former job status as specified under (d) through (e) of this subsection or the employee must be permanently removed from excess cadmium exposure.

(v) The employer may not return an employee who has been medically removed for any reason to their former job status until a physician determines in a written medical opinion that continued medical removal is no longer necessary to protect the employee's health.

(b) Where an employee is found unfit to wear a respirator under subsection (6)(b) of this section, the employer must remove the employee from work where exposure to cadmium is above the PEL.

(c) Where removal is based on any reason other than the employee's inability to wear a respirator, the employer must remove the employee from work where exposure to cadmium is at or above the action level.

(d) Except as specified in (e) of this subsection, no employee who was removed because their level of CdU, CdB and/or ß2-M exceeded the medical removal trigger levels in subsection (3) or (4) of this section may be returned to work with exposure to cadmium at or above the action level until the employee's levels of CdU fall to or below 3 µg/g Cr, CdB falls to or below 5 µg/lwb, and ß2-M falls to or below 300 µg/g Cr.

(e) However, when in the examining physician's opinion continued exposure to cadmium will not pose an increased risk to the employee's health and there are special circumstances that make continued medical removal an inappropriate remedy, the physician must fully discuss these matters with the employee, and then in a written determination may return a worker to their former job status despite what would otherwise be unacceptably high biological monitoring results. Thereafter, the returned employee must continue to be provided with medical surveillance as if they were still on medical removal until the employee's levels of CdU fall to or below 3 µg/g Cr, CdB falls to or below 5 µg/lwb, and ß2-M falls to or below 300 µg/g Cr.

(f) Where an employer, although not required by (a) through (c) of this subsection to do so, removes an employee from exposure to cadmium or otherwise places limitations on an employee due to the effects of cadmium exposure on the employee's medical condition, the employer must provide the same medical removal protection benefits to that employee under subsection (12) of this section as would have been provided had the removal been required under (a) through (c) of this subsection.

(12) **Medical removal protection benefits (MRPB)**.

(a) The employer must provide MRPB for up to a maximum of eighteen months to an employee each time and while the employee is temporarily medically removed under subsection (11) of this section.

(b) For purposes of this section, the requirement that the employer provide MRPB means that the employer must maintain the total normal earnings, seniority, and all other employee rights and benefits of the removed employee, including the employee's right to their former job status, as if the employee had not been removed from the employee's job or otherwise medically limited.

(c) Where, after eighteen months on medical removal because of elevated biological monitoring results, the employee's monitoring results have not declined to a low enough level to permit the employee to be returned to their former job status:

(i) The employer must make available to the employee a medical examination pursuant in order to obtain a final medical determination as to whether the employee may be returned to their former job status or must be permanently removed from excess cadmium exposure; and

(ii) The employer must ensure that the final medical determination indicates whether the employee may be returned to their former job status and what steps, if any, should be taken to protect the employee's health.

(d) The employer may condition the provision of MRPB upon the employee's participation in medical surveillance provided in accordance with this section.

(13) **Multiple physician review**.

(a) If the employer selects the initial physician to conduct any medical examination or consultation provided to an employee under this section, the employee may designate a second physician to:

(i) Review any findings, determinations, or recommendations of the initial physician; and

(ii) Conduct such examinations, consultations, and laboratory tests as the second physician deems necessary to facilitate this review.

(b) The employer must promptly notify an employee of the right to seek a second medical opinion after each occasion that an initial physician provided by the employer conducts a medical examination or consultation pursuant to this section. The employer may condition its participation in, and payment for, multiple physician review upon the employee doing the following within fifteen days after receipt of this notice, or receipt of the initial physician's written opinion, whichever is later:

(i) Informing the employer that he or she intends to seek a medical opinion; and

(ii) Initiating steps to make an appointment with a second physician.

(c) If the findings, determinations, or recommendations of the second physician differ from those of the initial physician, then the employer and the employee must ensure that efforts are made for the two physicians to resolve any disagreement.

(d) If the two physicians have been unable to quickly resolve their disagreement, then the employer and the employee, through their respective physicians, must designate a third physician to:

(i) Review any findings, determinations, or recommendations of the other two physicians; and

(ii) Conduct such examinations, consultations, laboratory tests, and discussions with the other two physicians as the third physician deems necessary to resolve the disagreement among them.

(e) The employer must act consistently with the findings, determinations, and recommendations of the third physician, unless the employer and the employee reach an agreement that is consistent with the recommendations of at least one of the other two physicians.

(14) **Alternate physician determination**. The employer and an employee or designated employee representative may agree upon the use of any alternate form of physician determination in lieu of the multiple physician review provided by subsection (13) of this section, so long as the alternative is expeditious and at least as protective of the employee.

(15) **Information the employer must provide the employee**.

(a) The employer must provide a copy of the physician's written medical opinion to the examined employee within two weeks after receipt thereof.

(b) The employer must provide the employee with a copy of the employee's biological monitoring results and an explanation sheet explaining the results within two weeks after receipt thereof.

(c) Within thirty days after a request by an employee, the employer must provide the employee with the information the employer is required to provide the examining physician under subsection (9) of this section.

(16) **Reporting**. In addition to other medical events that are required to be reported on the OSHA Form No. 200, the employer must report any abnormal condition or disorder caused by occupational exposure to cadmium associated with employment as specified in WAC 296-27-02105.

WAC 296-62-07425 Communication of cadmium hazards.

(1) **General**. Chemical manufacturers, importers, distributors and employers must comply with all requirements of WAC 296-901-140 Hazard communication.

(2) In classifying the hazards of cadmium at least the following hazards are to be addressed: Cancer; lung effects; kidney effects; and acute toxicity effects.

(3) Employers must include cadmium in the hazard communication program established to comply with WAC 296-901-140 Hazard communication. Employers must ensure that each employee has access to labels on containers of cadmium and to safety data sheets (SDSs), and is trained in accordance with the requirements of WAC 296-901-140 Hazard communication and subsection (m)(4) of this section.

(4) **Warning signs**.

(a) Warning signs must be provided and displayed in regulated areas. In addition, warning signs must be posted at all approaches to regulated areas so that an employee may read the signs and take necessary protective steps before entering the area.

(b) The employer must ensure that signs required by this subsection are illuminated, cleaned, and maintained as necessary so that the legend is readily visible.

(c) Warning signs required by (a) of this subsection must bear the following legend:

DANGER CADMIUM MAY CAUSE CANCER
CAUSES DAMAGE TO LUNGS AND KIDNEYS
WEAR RESPIRATORY PROTECTION IN THIS AREA
AUTHORIZED PERSONNEL ONLY

(5) **Warning labels**.

(a) Shipping and storage containers containing cadmium, cadmium compounds, or cadmium contaminated clothing, equipment, waste, scrap, or debris must bear appropriate warning labels, as specified in subsection (1) of this section.

DANGER CONTAINS CADMIUM CANCER HAZARD
AVOID CREATING DUST CAN CAUSE LUNG AND KIDNEY DISEASE

(b) The warning labels for containers of contaminated protective clothing, equipment, waste, scrap, or debris must include at least the following information:

(c) Where feasible, installed cadmium products must have a visible label or other indication that cadmium is present.

(6) **Employee information and training**.

(a) The employer must train each employee who is potentially exposed to cadmium in accordance with the requirements of this chapter. The employer must institute a training program, ensure employee participation in the program, and maintain a record of the contents of such program.

(b) Training must be provided prior to or at the time of initial assignment to a job involving potential exposure to cadmium and at least annually thereafter.

(c) The employer must make the training program understandable to the employee and must ensure that each employee is informed of the following:

(i) The health hazards associated with cadmium exposure, with special attention to the information incorporated in WAC 296-62-07441, Appendix A;

(ii) The quantity, location, manner of use, release, and storage of cadmium in the workplace and the specific nature of operations that could result in exposure to cadmium, especially exposures above the PEL;

(iii) The engineering controls and work-practices associated with the employee's job assignment;

(iv) The measures employees can take to protect themselves from exposure to cadmium, including modification of such habits as smoking and personal hygiene, and specific procedures the employer has implemented to protect employees from exposure to cadmium such as appropriate work-practices, emergency procedures, and the provision of personal protective equipment;

(v) The purpose, proper selection, fitting, proper use, and limitations of protective clothing;

(vi) The purpose and a description of the medical surveillance program required by WAC 296-62-07423;

(vii) The contents of this section and its appendices;

(viii) The employee's rights of access to records under WAC 296-901-140, and chapter 296-802 WAC; and

(ix) The purpose, proper use, limitations, and other training requirements for respiratory protection as required in chapter 296-842.

(d) Additional access to information and training program and materials.

(i) The employer must make a copy of this section and its appendices readily available without cost to all affected employees and must provide a copy if requested.

(ii) The employer must provide to the director, upon request, all materials relating to the employee information and the training program.

WAC 296-62-07427 Recordkeeping.

(1) **Exposure monitoring**.

(a) The employer must establish and keep an accurate record of all air monitoring for cadmium in the workplace.

(b) This record must include at least the following information:

(i) The monitoring date, duration, and results in terms of an 8-hour TWA of each sample taken;

(ii) The name, Social Security number, and job classification of the employees monitored and of all other employees whose exposures the monitoring is intended to represent;

(iii) A description of the sampling and analytical methods used and evidence of their accuracy;

(iv) The type of respiratory protective device, if any, worn by the monitored employee;

(v) A notation of any other conditions that might have affected the monitoring results.

(c) The employer must maintain this record for at least thirty years, in accordance with chapter 296-802 WAC.

(2) **Objective data for exemption from requirement for initial monitoring**.

(a) For purposes of this section, objective data are information demonstrating that a particular product or material containing cadmium or a specific process, operation, or activity involving cadmium cannot release dust or fumes in concentrations at or above the action level even under the worst-case release conditions. Objective data can be obtained from an industry-wide study or from laboratory product test results from manufacturers of cadmium-containing products or materials. The data the employer uses from an industry-wide survey must be obtained under workplace conditions closely resembling the processes, types of material, control methods, work-practices and environmental conditions in the employer's current operations.

(b) The employer must establish and maintain a record of the objective data for at least thirty years.

(3) **Medical surveillance**.

(a) The employer must establish and maintain an accurate record for each employee covered by medical surveillance under WAC 296-62-07423 (1)(a).

(b) The record must include at least the following information about the employee:

(i) Name, Social Security number, and description of the duties;

(ii) A copy of the physician's written opinions and an explanation sheet for biological monitoring results;

(iii) A copy of the medical history, and the results of any physical examination and all test results that are required to be provided by this section, including biological tests, x-rays, pulmonary function tests, etc., or that have been obtained to further evaluate any condition that might be related to cadmium exposure;

(iv) The employee's medical symptoms that might be related to exposure to cadmium; and

(v) A copy of the information provided to the physician as required by WAC 296-62-07423 (9)(b) through (e).

(c) The employer must ensure that this record is maintained for the duration of employment plus thirty years, in accordance with chapter 296-802 WAC.

(4) **Training**. The employer must certify that employees have been trained by preparing a certification record which includes the identity of the person trained, the signature of the employer or the person who conducted the training, and the date the training was completed. The certification records must be prepared at the completion of training and must be maintained on file for one year beyond the date of training of that employee.

(5) **Availability**.

(a) Except as otherwise provided for in this section, access to all records required to be maintained by subsections (1) through (4) of this section must be in accordance with the provisions of chapter 296-802 WAC.

(b) Within fifteen days after a request, the employer must make an employee's medical records required to be kept by subsection (3) of this section available for examination and copying to the subject employee, to designated representatives, to anyone having the specific written consent of the subject employee, and after the employee's death or incapacitation, to the employee's family members.

(6) **Transfer of records**. Whenever an employer ceases to do business and there is no successor employer to receive and retain records for the prescribed period or the employer intends to dispose of any records required to be preserved for at least thirty years, the employer must comply with the requirements concerning transfer of records set forth in chapter 296-802 WAC.

WAC 296-62-07429 Observation of monitoring.

(1) **Employee observation**. The employer must provide affected employees or their designated representatives an opportunity to observe any monitoring of employee exposure to cadmium.

(2) **Observation procedures**. When observation of monitoring requires entry into an area where the use of protective clothing or equipment is required, the employer must provide the observer with that clothing and equipment and must ensure that the observer uses such clothing and equipment and complies with all other applicable safety and health procedures.

WAC 296-62-07433 Appendices.

WAC 296-62-07441, appendix A; WAC 296-62-07443, appendix B; WAC 296-62-07447, appendix D; WAC 296-62-07449, appendix E; and WAC 296-62-07451, appendix F are nonmandatory appendices and are not intended to create any additional obligations.

WAC 296-62-07441 Appendix A--substance safety data sheet--Cadmium.

(1) **Substance identification**.

(a) Substance: Cadmium.

(b) 8-Hour, time-weighted-average, permissible exposure limit (TWA PEL):

(c) TWA PEL: Five micrograms of cadmium per cubic meter of air 5 $\mu g/m^3$, time-weighted average (TWA) for an 8-hour workday.

(d) Appearance: Cadmium metal--soft, blue-white, malleable, lustrous metal or grayish-white powder. Some cadmium compounds may also appear as a brown, yellow, or red powdery substance.

(2) **Health hazard data**.

(a) Routes of exposure. Cadmium can cause local skin or eye irritation. Cadmium can affect your health if you inhale it or if you swallow it.

(b) Effects of overexposure.

(i) Short-term (acute) exposure: Cadmium is much more dangerous by inhalation than by ingestion. High exposures to cadmium that may be immediately dangerous to life or health occur in jobs where workers handle large quantities of cadmium dust or fume; heat cadmium-containing compounds or cadmium-coated surfaces; weld with cadmium solders or cut cadmium-containing materials such as bolts.

(ii) Severe exposure may occur before symptoms appear. Early symptoms may include mild irritation of the upper respiratory tract, a sensation of constriction of the throat, a metallic taste and/or a cough. A period of one to ten hours may precede the onset of rapidly progressing shortness of breath, chest pain, and flu-like symptoms with weakness, fever, headache, chills, sweating, and muscular pain. Acute pulmonary edema usually develops within twenty-four hours and reaches a maximum by three days. If death from asphyxia does not occur, symptoms may resolve within a week.

(iii) Long-term (chronic) exposure. Repeated or long-term exposure to cadmium, even at relatively low concentrations, may result in kidney damage and an increased risk of cancer of the lung and of the prostate.

(c) Emergency first aid procedures.

(i) Eye exposure: Direct contact may cause redness or pain. Wash eyes immediately with large amounts of water, lifting the upper and lower eyelids. Get medical attention immediately.

(ii) Skin exposure: Direct contact may result in irritation. Remove contaminated clothing and shoes immediately. Wash affected area with soap or mild detergent and large amounts of water. Get medical attention immediately.

(iii) Ingestion: Ingestion may result in vomiting, abdominal pain, nausea, diarrhea, headache, and sore throat. Treatment for symptoms must be administered by medical personnel. Under no circumstances should the employer allow any person whom they retain, employ, supervise, or controls to engage in therapeutic chelation. Such treatment is likely to translocate cadmium from pulmonary or other tissue to renal tissue. Get medical attention immediately.

(iv) Inhalation: If large amounts of cadmium are inhaled, the exposed person must be moved to fresh air at once. If breathing has stopped, perform cardiopulmonary resuscitation. Administer oxygen if available. Keep the affected person warm and at rest. Get medical attention immediately.

(v) Rescue: Move the affected person from the hazardous exposure. If the exposed person has been overcome, attempt rescue only after notifying at least one other person of the emergency and putting into effect established emergency procedures. Do not become a casualty yourself. Understand your emergency rescue procedures and know the location of the emergency equipment before the need arises.

(3) **Employee information**.

(a) Protective clothing and equipment.

(i) Respirators: You may be required to wear a respirator for nonroutine activities; in emergencies; while your employer is in the process of reducing cadmium exposures through engineering controls; and where engineering controls are not feasible. If air-purifying respirators are worn , they must have a label issued by the National Institute for Occupational Safety and Health (NIOSH) under the provisions of 42 CFR part 84 stating that the respirators have been certified for use with cadmium. Cadmium does not have a detectable odor except at levels well above the permissible exposure limits. If you can smell cadmium while wearing a respirator, proceed immediately to fresh air. If you experience difficulty breathing while wearing a respirator, tell your employer.

(ii) Protective clothing: You may be required to wear impermeable clothing, gloves, foot gear, a face shield, or other appropriate protective clothing to prevent skin contact with cadmium. Where protective clothing is required, your employer must provide clean garments to you as necessary to assure that the clothing protects you adequately. The employer must replace or repair protective clothing that has become torn or otherwise damaged.

(iii) Eye protection: You may be required to wear splash-proof or dust resistant goggles to prevent eye contact with cadmium.

(b) Employer requirements.

(i) Medical: If you are exposed to cadmium at or above the action level, your employer is required to provide a medical examination, laboratory tests and a medical history according to the medical surveillance provisions under WAC 296-62-07423. (See summary chart and tables in this section, appendix A.)

These tests must be provided without cost to you. In addition, if you are accidentally exposed to cadmium under conditions known or suspected to constitute toxic exposure to cadmium, your employer is required to make special tests available to you.

(ii) Access to records: All medical records are kept strictly confidential. You or your representative are entitled to see the records of measurements of your exposure to cadmium. Your medical examination records can be furnished to your personal physician or designated representative upon request by you to your employer.

(iii) Observation of monitoring: Your employer is required to perform measurements that are representative of your exposure to cadmium and you or your designated representative are entitled to observe the monitoring procedure. You are entitled to observe the steps taken in the measurement procedure, and to record the results obtained. When the monitoring procedure is taking place in an area where respirators or personal protective clothing and equipment are required to be worn, you or your representative must also be provided with, and must wear the protective clothing and equipment.

(c) Employee requirements. You will not be able to smoke, eat, drink, chew gum or tobacco, or apply cosmetics while working with cadmium in regulated areas. You will also not be able to carry or store tobacco products, gum, food, drinks, or cosmetics in regulated areas because these products easily become contaminated with cadmium from the workplace and can therefore create another source of unnecessary cadmium exposure. Some workers will have to change out of work clothes and shower at the end of the day, as part of their workday, in order to wash cadmium from skin and hair. Handwashing and cadmium-free eating facilities must be provided by the employer and proper hygiene should always be performed before eating. It is also recommended that you do not smoke or use tobacco products, because among other things, they naturally contain cadmium. For further information, read the labeling on such products.

(4) **Physician information**.

(a) Introduction. The medical surveillance provisions of WAC 296-62-07423 generally are aimed at accomplishing three main interrelated purposes: First, identifying employees at higher risk of adverse health effects from excess, chronic exposure to cadmium; second, preventing cadmium-induced disease; and third, detecting and minimizing existing cadmium-induced disease. The core of medical surveillance in this standard is the early and periodic monitoring of the employee's biological indicators of:

(i) Recent exposure to cadmium;

(ii) Cadmium body burden; and

(iii) Potential and actual kidney damage associated with exposure to cadmium. The main adverse health effects associated with cadmium overexposure are lung cancer and kidney dysfunction. It is not yet known how to adequately biologically monitor human beings to specifically prevent cadmium-induced lung cancer. By contrast, the kidney can be monitored to provide prevention and early detection of cadmium-induced kidney damage.

Since, for noncarcinogenic effects, the kidney is considered the primary target organ of chronic exposure to cadmium, the medical surveillance provisions of this standard effectively focus on cadmium-induced kidney disease. Within that focus, the aim, where possible, is to prevent the onset of such disease and, where necessary, to minimize such disease as may already exist. The by-products of successful prevention of kidney disease are anticipated to be the reduction and prevention of other cadmium-induced diseases.

(b) Health effects. The major health effects associated with cadmium overexposure are described below.

(i) Kidney: The most prevalent nonmalignant disease observed among workers chronically exposed to cadmium is kidney dysfunction. Initially, such dysfunction is manifested as proteinuria. The proteinuria associated with cadmium exposure is most commonly characterized by excretion of low-molecular weight proteins (15,000 to 40,000 MW) accompanied by loss of electrolytes, uric acid, calcium, amino acids, and phosphate. The compounds commonly excreted include: beta-2-microglobulin (ß2-M), retinol binding protein (RBP), immunoglobulin light chains, and lysozyme. Excretion of low molecular weight proteins are characteristic of damage to the proximal tubules of the kidney (Iwao et al., 1980). It has also been observed that exposure to cadmium may lead to urinary excretion of high-molecular weight proteins such as albumin, immunoglobulin G, and glycoproteins (Ex. 29). Excretion of high-molecular weight proteins is typically indicative of damage to the glomeruli of the kidney. Bernard et al., (1979) suggest that damage to the glomeruli and damage to the proximal tubules of the kidney may both be linked to cadmium exposure but they may occur independently of each other. Several studies indicate that the onset of low-molecular weight proteinuria is a sign of irreversible kidney damage (Friberg et al., 1974; Roels et al., 1982; Piscator 1984; Elinder et al., 1985; Smith et al., 1986). Above specific levels of ß2-M associated with cadmium exposure it is unlikely that ß2-M levels return to normal even when cadmium exposure is eliminated by removal of the individual from the cadmium work environment (Friberg, Ex. 29, 1990). Some studies indicate that such proteinuria may be progressive; levels of ß2-M observed in the urine increase with time even after cadmium exposure has ceased. See, for example, Elinder et al., 1985. Such observations, however, are not universal, and it has been suggested that studies in which proteinuria has not been observed to progress may not have tracked patients for a sufficiently long time interval (Jarup, Ex. 8-661). When cadmium exposure continues after the onset of proteinuria, chronic nephrotoxicity may occur (Friberg, Ex. 29). Uremia results from the inability of the glomerulus to adequately filter blood. This leads to severe disturbance of electrolyte concentrations and may lead to various clinical complications including kidney stones (L-140-50). After prolonged exposure to cadmium, glomerular proteinuria, glucosuria, aminoaciduria, phosphaturia, and hypercalciuria may develop (Exs. 8-86, 4-28, 14-18). Phosphate, calcium, glucose, and amino acids are essential to life, and under normal conditions, their excretion should be regulated by the kidney. Once low molecular weight proteinuria has developed, these elements dissipate from the human body. Loss of glomerular function may also occur, manifested by decreased glomerular filtration rate and increased serum creatinine. Severe

cadmium-induced renal damage may eventually develop into chronic renal failure and uremia (Ex. 55). Studies in which animals are chronically exposed to cadmium confirm the renal effects observed in humans (Friberg et al., 1986). Animal studies also confirm problems with calcium metabolism and related skeletal effects which have been observed among humans exposed to cadmium in addition to the renal effects. Other effects commonly reported in chronic animal studies include anemia, changes in liver morphology, immunosuppression and hypertension. Some of these effects may be associated with co-factors. Hypertension, for example, appears to be associated with diet as well as cadmium exposure. Animals injected with cadmium have also shown testicular necrosis (Ex. 8- 86B).

(ii) Biological markers. It is universally recognized that the best measures of cadmium exposures and its effects are measurements of cadmium in biological fluids, especially urine and blood. Of the two, CdU is conventionally used to determine body burden of cadmium in workers without kidney disease. CdB is conventionally used to monitor for recent exposure to cadmium. In addition, levels of CdU and CdB historically have been used to predict the percent of the population likely to develop kidney disease (Thun et al., Ex. L-140-50; WHO, Ex. 8-674; ACGIH, Exs. 8-667, 140-50). The third biological parameter upon which WISHA relies for medical surveillance is beta-2-microglobulin in urine (ß2-M), a low molecular weight protein. Excess ß2-M has been widely accepted by physicians and scientists as a reliable indicator of functional damage to the proximal tubule of the kidney.

(Exs. 8-447, 144-3-C, 4-47, L-140-45, 19-43-A). Excess ß2-M is found when the proximal tubules can no longer reabsorb this protein in a normal manner. This failure of the proximal tubules is an early stage of a kind of kidney disease that commonly occurs among workers with excessive cadmium exposure. Used in conjunction with biological test results indicating abnormal levels of CdU and CdB, the finding of excess ß2-M can establish for an examining physician that any existing kidney disease is probably cadmium-related (Trs. 6/6/90, pp. 82-86, 122, 134). The upper limits of normal levels for cadmium in urine and cadmium in blood are 3 µg Cd/gram creatinine in urine and 5 µg Cd/liter whole blood, respectively. These levels were derived from broad-based population studies. Three issues confront the physicians in the use of ß2-M as a marker of kidney dysfunction and material impairment. First, there are a few other causes of elevated levels of ß2-M not related to cadmium exposures, some of which may be rather common diseases and some of which are serious diseases (e.g., myeloma or transient flu, Exs. 29 and 8-086). These can be medically evaluated as alternative causes (Friberg, Ex. 29). Also, there are other factors that can cause ß2-M to degrade so that low levels would result in workers with tubular dysfunction. For example, regarding the degradation of ß2-M, workers with acidic urine (pH<6) might have ß2-M levels that are within the "normal" range when in fact kidney dysfunction has occurred (Ex. L-140-1) and the low molecular weight proteins are degraded in acid urine.

Thus, it is very important that the pH of urine be measured, that urine samples be buffered as necessary (See WAC 296-62-07451, appendix F.), and that urine samples be handled correctly, i.e., measure the pH of freshly voided urine samples, then if necessary, buffer to Ph>6 (or above for shipping purposes),

measure Ph again and then, perhaps, freeze the sample for storage and shipping. (See also WAC 296-62-07451, appendix F.) Second, there is debate over the pathological significance of proteinuria, however, most world experts believe that ß2-M levels greater than 300 µg/g Cr are abnormal (Elinder, Ex. 55, Friberg, Ex. 29). Such levels signify kidney dysfunction that constitutes material impairment of health. Finally, detection of ß2-M at low levels has often been considered difficult, however, many laboratories have the capability of detecting excess ß2-M using simple kits, such as the Phadebas Delphia test, that are accurate to levels of 100 µg ß2-M/g Cr U (Ex. L-140-1). Specific recommendations for ways to measure ß2-M and proper handling of urine samples to prevent degradation of ß2-M have been addressed by WISHA in WAC 296-62-07451, appendix F, in the section on laboratory standardization. All biological samples must be analyzed in a laboratory that is proficient in the analysis of that particular analyte, under WAC 296-62-07423 (1)(d). (See WAC 296-62-07451, appendix F). Specifically, under WAC 296-62-07423 (1)(d), the employer is to ensure that the collecting and handling of biological samples of cadmium in urine (CdU), cadmium in blood (CdB), and beta-2 microglobulin in urine (ß2-M) taken from employees is collected in a manner that ensures reliability. The employer must also ensure that analysis of biological samples of cadmium in urine (CdU), cadmium in blood (CdB), and beta-2 microglobulin in urine (ß2-M) taken from employees is performed in laboratories with demonstrated proficiency for that particular analyte. (See WAC 296-62-07451, appendix F).

(iii) Lung and prostate cancer. The primary sites for cadmium-associated cancer appear to be the lung and the prostate (L-140-50). Evidence for an association between cancer and cadmium exposure derives from both epidemiological studies and animal experiments. Mortality from prostate cancer associated with cadmium is slightly elevated in several industrial cohorts, but the number of cases is small and there is not clear dose-response relationship. More substantive evidence exists for lung cancer. The major epidemiological study of lung cancer was conducted by Thun et al., (Ex. 4-68). Adequate data on cadmium exposures were available to allow evaluation of dose-response relationships between cadmium exposure and lung cancer. A statistically significant excess of lung cancer attributed to cadmium exposure was observed in this study even when confounding variables such as co-exposure to arsenic and smoking habits were taken into consideration (Ex. L-140-50). The primary evidence for quantifying a link between lung cancer and cadmium exposure from animal studies derives from two rat bioassay studies; one by Takenaka et al., (1983), which is a study of cadmium chloride and a second study by Oldiges and Glaser (1990) of four cadmium compounds. Based on the above cited studies, the U.S. Environmental Protection Agency (EPA) classified cadmium as “B1”, a probable human carcinogen, in 1985 (Ex. 4-4). The International Agency for Research on Cancer (IARC) in 1987 also recommended that cadmium be listed as “2A”, a probable human carcinogen (Ex. 4-15). The American Conference of Governmental Industrial Hygienists (ACGIH) has recently recommended that cadmium be labeled as a carcinogen. Since 1984, NIOSH has concluded that cadmium is possibly a human carcinogen and has recommended that exposures be controlled to the lowest level feasible.

(iv) Noncarcinogenic effects. Acute pneumonitis occurs 10 to 24 hours after initial acute inhalation of high levels of cadmium fumes with symptoms such as fever and chest pain (Exs. 30, 8-86B). In extreme exposure cases pulmonary edema may develop and cause death several days after exposure. Little actual exposure measurement data is available on the level of airborne cadmium exposure that causes such immediate adverse lung effects, nonetheless, it is reasonable to believe cadmium concentration of approximately 1 mg/m3 over an eight hour period is "immediately dangerous" (55 FR 4052, ANSI; Ex. 8-86B). In addition to acute lung effects and chronic renal effects, long term exposure to cadmium may cause other severe effects on the respiratory system. Reduced pulmonary function and chronic lung disease indicative of emphysema have been observed in workers who have had prolonged exposure to cadmium dust or fumes (Exs. 4-29, 4-22, 4-42, 4-50, 4-63). In a study of workers conducted by Kazantzis et al., a statistically significant excess of worker deaths due to chronic bronchitis was found, which in his opinion was directly related to high cadmium exposures of 1 mg/m3 or more (Tr. 6/8/90, pp. 156-157). Cadmium need not be respirable to constitute a hazard. Inspirable cadmium particles that are too large to be respirable but small enough to enter the tracheobronchial region of the lung can lead to bronchoconstriction, chronic pulmonary disease, and cancer of that portion of the lung. All of these diseases have been associated with occupational exposure to cadmium (Ex. 8- 86B). Particles that are constrained by their size to the extra-thoracic regions of the respiratory system such as the nose and maxillary sinuses can be swallowed through mucocillary clearance and be absorbed into the body (ACGIH, Ex. 8-692). The impaction of these particles in the upper airways can lead to anosmia, or loss of sense of smell, which is an early indication of overexposure among workers exposed to heavy metals. This condition is commonly reported among cadmium-exposed workers (Ex. 8-86-B).

(c) Medical surveillance. In general, the main provisions of the medical surveillance section of the standard, under WAC 296-62-07423 (1) through (16), are as follows:

(i) Workers exposed above the action level are covered;

(ii) Workers with intermittent exposures are not covered;

(iii) Past workers who are covered receive biological monitoring for at least one year;

(iv) Initial examinations include a medical questionnaire and biological monitoring of cadmium in blood (CdB), cadmium in urine (CdU), and Beta-2-microglobulin in urine (ß2-M);

(v) Biological monitoring of these three analytes is performed at least annually; full medical examinations are performed biennially;

(vi) Until five years from the effective date of the standard, medical removal is required when CdU is greater than 15 µg/gram creatinine (g Cr), or CdB is greater than 15 µg/liter whole blood (lwb), or ß2-M is greater than 1500 µg/g Cr, and CdB is greater than 5 µg/lwb or CdU is greater than 3 µg/g Cr;

(vii) Beginning five years after the standard is in effect, medical removal triggers will be reduced;

(viii) Medical removal protection benefits are to be provided for up to eighteen months;

(ix) Limited initial medical examinations are required for respirator usage;

(x) Major provisions are fully described under WAC 296-62-07423; they are outlined here as follows:

(A) Eligibility.

(B) Biological monitoring.

(C) Actions triggered by levels of CdU, CdB, and ß2-M (See Summary Charts and Tables in WAC 296-62-07441(5).)

(D) Periodic medical surveillance.

(E) Actions triggered by periodic medical surveillance (See appendix A Summary Chart and Tables in WAC 296-62-07441(5).)

(F) Respirator usage.

(G) Emergency medical examinations.

(H) Termination examination.

(I) Information to physician.

(J) Physician's medical opinion.

(K) Medical removal protection.

(L) Medical removal protection benefits.

(M) Multiple physician review.

(N) Alternate physician review.

(O) Information employer gives to employee.

(P) Recordkeeping.

(Q) Reporting on OSHA form 200.

(xi) The above mentioned summary of the medical surveillance provisions, the summary chart, and tables for the actions triggered at different levels of CdU, CdB and ß2-M (in subsection (5) of this section, Attachment 1) are included only for the purpose of facilitating understanding of the provisions of WAC 296-62-07423(3) of the final cadmium standard. The summary of the provisions, the summary chart, and the tables do not add to or reduce the requirements in WAC 296-62-07423(3).

(d) Recommendations to physicians.

(i) It is strongly recommended that patients with tubular proteinuria are counseled on: The hazards of smoking; avoidance of nephrotoxins and certain prescriptions and over-the-counter medications that may exacerbate kidney symptoms; how to control diabetes and/or blood pressure; proper hydration, diet, and exercise (Ex. 19-2). A list of prominent or common nephrotoxins is attached. (See subsection (6) of this section, Attachment 2.)

(ii) DO NOT CHELATE; KNOW WHICH DRUGS ARE NEPHROTOXINS OR ARE ASSOCIATED WITH NEPHRITIS.

(iii) The gravity of cadmium-induced renal damage is compounded by the fact there is no medical treatment to prevent or reduce the accumulation of cadmium in the kidney (Ex. 8-619). Dr. Friberg, a leading world expert on cadmium toxicity, indicated in 1992, that there is no form of chelating agent that could be used without substantial risk. He stated that tubular proteinuria has to be treated in the same way as other kidney disorders (Ex. 29).

(iv) After the results of a workers' biological monitoring or medical examination are received the employer is required to provide an information sheet to the patient, briefly explaining the significance of the results. (See subsection (7) of this section.)

(v) For additional information the physician is referred to the following additional resources:

(A) The physician can always obtain a copy of the OSHA final rule preamble, with its full discussion of the health effects, from OSHA's Computerized Information System (OCIS).

(B) The OSHA Docket Officer maintains a record of the OSHA rulemaking. The Cadmium Docket (H-057A), is located at 200 Constitution Ave. NW., Room N-2625, Washington, DC 20210; telephone: (202) 219-7894.

(C) The following articles and exhibits in particular from that docket (H-057A):

Exhibit number	***Author and paper title***
8-447	Lauwerys et. al., Guide for physicians, “Health Maintenance of Workers Exposed to Cadmium,” published by the Cadmium Council.
4-67	Takenaka, S., H. Oldiges, H. Konig, D. Hochrainer, G. Oberdorster. “Carcinogenicity of Cadmium Chloride Aerosols in Wistar Rats”. JNCI 70:367-373, 1983. (32)
4-68	Thun, M.J., T.M. Schnoor, A.B. Smith, W.E. Halperin, R.A. Lemen. “Mortality Among a Cohort of U.S. Cadmium Production Workers--An Update.” JNCI 74(2):325-33, 1985. (8)
4-25	Elinder, C.G., Kjellstrom, T., Hogstedt, C., et al., “Cancer Mortality of Cadmium Workers.” Brit. J. Ind. Med. 42:651-655, 1985. (14)
4-26	Ellis, K.J. et al., “Critical Concentrations of Cadmium in Human Renal Cortex: Dose Effect Studies to Cadmium Smelter Workers.” J. Toxicol. Environ. Health 7:691-703, 1981. (76)

4-27	Ellis, K.J., S.H. Cohn and T.J. Smith. "Cadmium Inhalation Exposure Estimates: Their Significance with Respect to Kidney and Liver Cadmium Burden." J. Toxicol. Environ. Health 15:173-187, 1985.
4-28	Falck, F.Y., Jr., Fine, L.J., Smith, R.G., McClatchey, K.D., Annesley, T., England, B., and Schork, A.M. "Occupational Cadmium Exposure and Renal Status." Am. J. Ind. Med. 4:541, 1983. (64)
8-86A	Friberg, L., C.G. Elinder, et al., "Cadmium and Health a Toxicological and Epidemiological Appraisal, Volume I, Exposure, Dose, and Metabolism." CRC Press, Inc., Boca Raton, FL, 1986. (Available from the OSHA Technical Data Center)
8-86B	Friberg, L., C.G. Elinder, et al., "Cadmium and Health: A Toxicological and Epidemiological Appraisal, Volume II, Effects and Response." CRC Press, Inc., Boca Raton, FL, 1986. (Available from the OSHA Technical Data Center)
L-140-45	Elinder, C.G., "Cancer Mortality of Cadmium Workers", Brit. J. Ind. Med., 42, 651-655, 1985.
L-140-50	Thun, M., Elinder, C.G., Friberg, L, "Scientific Basis for an Occupational Standard for Cadmium, Am. J. Ind. Med., 20; 629-642, 1991.

(5) **Information sheet**. The information sheet (subsection (8) of this section, Attachment 3) or an equally explanatory one should be provided to you after any biological monitoring results are reviewed by the physician, or where applicable, after any medical examination.

(6) **Attachment 1**--Appendix A**,** summary chart and Tables A and B of actions triggered by biological monitoring.

(a) Summary chart: WAC 296-62-07423(3) Medical surveillance--Categorizing biological monitoring results.

(i) Biological monitoring results categories are set forth in Table A for the periods ending December 31, 1998, and for the period beginning January 1, 1999.

(ii) The results of the biological monitoring for the initial medical exam and the subsequent exams must determine an employee's biological monitoring result category.

(b) Actions triggered by biological monitoring.

(i) The actions triggered by biological monitoring for an employee are set forth in Table B.

(ii) The biological monitoring results for each employee under WAC 296-62-07423(3) must determine the actions required for that employee. That is, for any employee in biological monitoring category C, the employer will perform all of the actions for which there is an X in column C of Table B.

(iii) An employee is assigned the alphabetical category ("A" being the lowest) depending upon the test results of the three biological markers.

(iv) An employee is assigned category A if monitoring results for all three biological markers fall at or below the levels indicated in the table listed for category A.

(v) An employee is assigned category B if any monitoring result for any of the three biological markers fall within the range of levels indicated in the table listed for category B, providing no result exceeds the levels listed for category B.

(vi) An employee is assigned category C if any monitoring result for any of the three biological markers are above the levels listed for category C.

(c) The user of Tables A and B should know that these tables are provided only to facilitate understanding of the relevant provisions of WAC 296-62-07423. Tables A and B are not meant to add to or subtract from the requirements of those provisions.

Table A Categorization of Biological Monitoring Results Applicable Through 1998 Only

	Monitoring result categories		
Biological marker	**A**	**B**	**C**
Cadmium in urine (CdU) (µg/g creatinine)	≤ = 3	>3 and ≤ = 15	>15
ß2-microglobulin (ß2-M) (µg/g creatinine)	≤ = 300	>300 and ≤ = 1500	>1500*
Cadmium in blood (CdB) (µg/liter whole blood)	≤ = 5	>5 and ≤ = 15	>15

* If an employee's ß2-M levels are above 1,500 µg/g creatinine, in order for mandatory medical removal to be required (See WAC 296-62-07441, Appendix A Table B.), either the employee's CdU level must also be >3 µg/g creatinine or CdB level must also be >5 µg/liter whole blood.

Applicable Beginning January 1, 1999 Monitoring result categories			
Biological marker	A	B	C
Cadmium in urine (CdU) (µg/g creatinine)	≤ = 3	>3 and ≤ = 7	>7
ß2-microglobulin (ß2-M) (µg/g creatinine)	≤ = 300	>300 and ≤ = 750	>750*
Cadmium in blood (CdB) (µg/liter whole blood)	≤ = 5	>5 and ≤ = 10	>10

* If an employee's ß2-M levels are above 750 µg/g creatinine, in order for mandatory medical removal to be required (See WAC 296-62-07441, Appendix A Table B.), either the employee's CdU level must also be >3 µg/g creatinine or CdB level must also be >5 µg/liter whole blood.

Table B--Actions determined by biological monitoring.

This table presents the actions required based on the monitoring result in Table A. Each item is a separate requirement in citing noncompliance. For example, a medical examination within ninety days for an employee in category B is separate from the requirement to administer a periodic medical examination for category B employees on an annual basis.

Table B Monitoring result category			
	A[1]	B[1]	C[1]
Required actions			
(1) Biological monitoring:			
(a) Annual.	X		
(b) Semiannual.		X	
(c) Quarterly.			X
(2) Medical examination:			
(a) Biennial.	X		
(b) Annual.		X	
(c) Semiannual.			X
(d) Within 90 days.		X	X
(3) Assess within two weeks:			
(a) Excess cadmium exposure.		X	X
(b) Work-practices.		X	X
(c) Personal hygiene.		X	X
(d) Respirator usage.		X	X
(e) Smoking history.		X	X
(f) Hygiene facilities.		X	X
(g) Engineering controls.		X	X
(h) Correct within 30 days.		X	X
(i) Periodically assess exposures.			X
(4) Discretionary medical removal.		X	X
(5) Mandatory medical removal.			X[2]

[1] For all employees covered by medical surveillance exclusively because of exposures prior to the effective date of this standard, if they are in Category A, the employer shall follow the requirements of WAC 296-62-07423 (3)(a)(ii) and (4)(e)(i). If they are in Category B or C, the employer shall follow the requirements of WAC 296-62-07423 (4)(e)(ii) and (iii).

[2] See footnote in Table A.

(7) **Attachment 2, list of medications**.

(a) A list of the more common medications that a physician, and the employee, may wish to review is likely to include some of the following:

(i) Anticonvulsants: Paramethadione, phenytoin, trimethadone;

(ii) Antihypertensive drugs: Captopril, methyldopa;

(iii) Antimicrobials: Aminoglycosides, amphotericin B, cephalosporins, ethambutol;

(iv) Antineoplastic agents: Cisplatin, methotrexate, mitomycin-C, nitrosoureas, radiation;

(v) Sulfonamide diuretics: Acetazolamide, chlorthalidone, furosemide, thiazides;

(vi) Halogenated alkanes, hydrocarbons, and solvents that may occur in some settings: Carbon tetrachloride, ethylene glycol, toluene; iodinated radiographic contrast media; nonsteroidal anti-inflammatory drugs; and

(vii) Other miscellaneous compounds: Acetaminophen, allopurinol, amphetamines, azathioprine, cimetidine, cyclosporine, lithium, methoxyflurane, methysergide, D-penicillamine, phenacetin, phenendione.

(b) A list of drugs associated with acute interstitial nephritis includes:

(i) Antimicrobial drugs: Cephalosporins, chloramphenicol, colistin, erythromycin, ethambutol, isoniazid, para-aminosalicylic acid, penicillins, polymyxin B, rifampin, sulfonamides, tetracyclines, and vancomycin;

(ii) Other miscellaneous drugs: Allopurinol, antipyrine, azathioprine, captopril, cimetidine, clofibrate, methyldopa, phenindione, phenylpropanolamine, phenytoin, probenecid, sulfinpyrazone, sulfonamide diuretics, triamterene; and

(iii) Metals: Bismuth, gold. This list has been derived from commonly available medical textbooks (e.g., Ex. 14-18). The list has been included merely to facilitate the physician's, employer's, and employee's understanding. The list does not represent an official OSHA opinion or policy regarding the use of these medications for particular employees. The use of such medications should be under physician discretion.

(8) **Attachment 3**--Biological monitoring and medical examination results.

Employee_____

Testing Date_____

Cadmium in Urine ___ µg/g Cr--Normal Levels: ≤ = 3 µg/g Cr.

Cadmium in Blood ___ µg/lwb--Normal Levels: ≤ = 5 µg/lwb.

Beta-2-microglobulin in Urine ___ µg/g Cr—Normal Levels: ≤ = 300 µg/g Cr.

Physical Examination Results: N/A ___ Satisfactory ___ Unsatisfactory ___ (see physician again).

Physician's Review of Pulmonary Function Test: N/A ___ Normal ___ Abnormal ___.

Next biological monitoring or medical examination scheduled for _____.

(a) The biological monitoring program has been designed for three main purposes:

(i) To identify employees at risk of adverse health effects from excess, chronic exposure to cadmium;

(ii) To prevent cadmium-induced disease(s); and

(iii) To detect and minimize existing cadmium-induced disease(s).

(b) The levels of cadmium in the urine and blood provide an estimate of the total amount of cadmium in the body. The amount of a specific protein in the urine (beta-2-microglobulin) indicates changes in kidney function. All three tests must be evaluated together. A single mildly elevated result may not be important if testing at a later time indicates that the results are normal and the workplace has been evaluated to decrease possible sources of cadmium exposure. The levels of cadmium or beta-2-microglobulin may change over a period of days to months and the time needed for those changes to occur is different for each worker.

(c) If the results for biological monitoring are above specific "high levels" (cadmium urine greater than 10 micrograms per gram of creatinine µg/ Cr), cadmium blood greater than 10 micrograms per liter of whole blood (µg/lwb), or beta-2-microglobulin greater than 1000 micrograms per gram of creatinine (µg/g Cr), the worker has a much greater chance of developing other kidney diseases.

(d) One way to measure for kidney function is by measuring beta-2-microglobulin in the urine. Beta-2-microglobulin is a protein which is normally found in the blood as it is being filtered in the kidney, and the kidney reabsorbs or returns almost all of the beta-2-microglobulin to the blood. A very small amount (less than 300 µg/g Cr in the urine) of beta-2-microglobulin is not reabsorbed into the blood, but is released in the urine. If cadmium damages the kidney, the amount of beta-2-microglobulin in the urine increases because the kidney cells are unable to reabsorb the beta-2-microglobulin normally. An increase in the amount of beta-2-microglobulin in the urine is a very early sign of kidney dysfunction. A small increase in beta-2-microglobulin in the urine will serve as an early warning sign that the worker may be absorbing cadmium from the air, cigarettes contaminated in the workplace, or eating in areas that are cadmium contaminated.

(e) Even if cadmium causes permanent changes in the kidney's ability to reabsorb beta-2-microglobulin, and the beta-2-microglobulin is above the "high levels," the loss of kidney function may not lead to any serious health problems. Also, renal function naturally declines as people age. The risk for changes in kidney function for workers who have biological monitoring results between the "normal values" and the "high levels" is not well known. Some people are more cadmium-tolerant, while others are more cadmium-susceptible.

(f) For anyone with even a slight increase of beta-2-microglobulin, cadmium in the urine, or cadmium in the blood, it is very important to protect the kidney from further damage. Kidney damage can come from other sources than excess cadmium-exposure so it is also recommended that if a worker's levels are "high" they should receive counseling about drinking more water; avoiding cadmium-tainted tobacco and certain medications (nephrotoxins, acetaminophen); controlling diet, vitamin intake, blood pressure and diabetes; etc.

WAC 296-62-07443 Appendix B--Substance technical guidelines for cadmium.

(1) **Cadmium metal**.

(a) Physical and chemical data.

(i) Substance identification.

Chemical name: Cadmium.

Formula: Cd.

Molecular Weight: 112.4.

Chemical Abstracts Service (CAS) Registry No.: 7740-43-9.

Other identifiers: RETCS EU9800000; EPA D006; DOT 2570 53.

Synonyms: Colloidal Cadmium: Kadmium (German): CI 77180.

(ii) Physical data.

Boiling point: (760 mm Hg): 765 degrees C.

Melting point: 321 degrees C.

Specific gravity: (H_2O = @ 20°C): 8.64.

Solubility: Insoluble in water; soluble in dilute nitric acid and in sulfuric acid.

Appearance: Soft, blue-white, malleable, lustrous metal or grayish-white powder.

(b) Fire, explosion, and reactivity data.

(i) Fire.

Fire and explosion hazards: The finely divided metal is pyrophoric, that is the dust is a severe fire hazard and moderate explosion hazard when exposed to heat or flame. Burning material reacts violently with extinguishing agents such as water, foam, carbon dioxide, and halons.

Flash point: Flammable (dust).

Extinguishing media: Dry sand, dry dolomite, dry graphite, or sodium chloride.

(ii) Reactivity.

Conditions contributing to instability: Stable when kept in sealed containers under normal temperatures and pressure, but dust may ignite upon contact with air. Metal tarnishes in moist air.

(iii) Incompatibilities: Ammonium nitrate, fused: Reacts violently or explosively with cadmium dust below 20°C. Hydrozoic acid: Violent explosion occurs after thirty minutes. Acids: Reacts violently, forms hydrogen gas. Oxidizing agents or metals: Strong reaction with cadmium dust. Nitryl fluoride at slightly elevated temperature: Glowing or white incandescence occurs. Selenium: Reacts exothermically. Ammonia: Corrosive reaction. Sulfur dioxide: Corrosive reaction. Fire extinguishing agents (water, foam, carbon dioxide, and halons): Reacts violently. Tellurium: Incandescent reaction in hydrogen atmosphere.

(iv) Hazardous decomposition products: The heated metal rapidly forms highly toxic, brownish fumes of oxides of cadmium.

(c) Spill, leak, and disposal procedures.

(i) Steps to be taken if the materials is released or spilled. Do not touch spilled material. Stop leak if you can do it without risk. Do not get water inside container. For large spills, dike spill for later disposal. Keep unnecessary people away. Isolate hazard area and deny entry.

(ii) The Superfund Amendments and Reauthorization Act of 1986 Section 304 requires that a release equal to or greater than the reportable quantity for this substance (one pound) must be immediately reported to the local emergency planning committee, the state emergency response commission, and the National Response Center (800) 424-8802; in Washington, DC metropolitan area (202) 426-2675.

(2) **Cadmium oxide**.

(a) Physical and chemical date.

(i) Substance identification.

Chemical name: Cadmium oxide.

Formula: CdO.

Molecular Weight: 128.4.

CAS No.: 1306-19-0.

Other identifiers: RTECS EV1929500.

Synonyms: Kadmu tlenek (Polish).

(ii) Physical data.

Boiling point (760 mm Hg): 950 degrees C decomposes.

Melting point: 1500°C.

Specific gravity: (H_2O = 1@20°C): 7.0.

Solubility: Insoluble in water; soluble in acids and alkalines.

Appearance: Red or brown crystals.

(b) Fire, explosion, and reactivity data.

(i) Fire.

Fire and explosion hazards: Negligible fire hazard when exposed to heat or flame.

Flash point: Nonflammable.

Extinguishing media: Dry chemical, carbon dioxide, water spray or foam.

(ii) Reactivity.

(iii) Conditions contributing to instability: Stable under normal temperatures and pressures.

(iv) Incompatibilities: Magnesium may reduce CdO2 explosively on heating.

(v) Hazardous decomposition products: Toxic fumes of cadmium.

(c) Spill, leak, and disposal procedures.

(i) Steps to be taken if the material is released or spilled. Do not touch spilled material. Stop leak if you can do it without risk. For small spills, take up with sand or other absorbent material and place into containers for later disposal. For small dry spills, use a clean shovel to place material into clean, dry container and then cover. Move containers from spill area. For larger spills, dike far ahead of spill for later disposal. Keep unnecessary people away. Isolate hazard area and deny entry.

(ii) The Superfund Amendments and Reauthorization Act of 1986 Section 304 requires that a release equal to or greater than the reportable quantity for this substance (one pound) must be immediately reported to the local emergency planning committee, the state emergency response commission, and the National Response Center (800) 424-8802; in Washington, DC metropolitan area (202) 426-2675.

(3) **Cadmium sulfide**.

(a) Physical and chemical data.

(i) Substance identification.

Chemical name: Cadmium sulfide.

Formula: CdS.

Molecular weight: 144.5.

CAS No. 1306-23-6.

Other identifiers: RTECS EV3150000.

Synonyms: Aurora yellow; Cadmium Golden 366; Cadmium Lemon Yellow 527; Cadmium Orange; Cadmium Primrose 819; Cadmium Sulphide; Cadmium Yellow; Cadmium Yellow 000; Cadmium Yellow Conc. Deep; Cadmium Yellow Conc. Golden; Cadmium Yellow Conc. Lemon; Cadmium Yellow

Conc. Primrose; Cadmium Yellow Oz. Dark; Cadmium Yellow Primrose 47-1400; Cadmium Yellow 10G Conc.; Cadmium Yellow 892; Cadmopur Golden Yellow N; Cadmopur Yellow: Capsebon; C.I. 77199; C.I. Pigment Orange 20; CI Pigment Yellow 37; Ferro Lemon Yellow; Ferro Orange Yellow; Ferro Yellow; Greenockite; NCI-C02711.

(ii) Physical data.

Boiling point (760 mm. Hg): sublines in N2 at 980°C.

Melting point: 1750 degrees C (100 atm).

Specific gravity: (H_2O = 1@ 20°C): 4.82.

Solubility: Slightly soluble in water; soluble in acid.

Appearance: Light yellow or yellow-orange crystals.

(b) Fire, explosion, and reactivity data.

(i) Fire.

Fire and explosion hazards: Negligible fire hazard when exposed to heat or flame.

Flash point: Nonflammable.

Extinguishing media: Dry chemical, carbon dioxide, water spray or foam.

(ii) Reactivity. Conditions contributing to instability: Generally nonreactive under normal conditions. Reacts with acids to form toxic hydrogen sulfide gas.

(iii) Incompatibilities: Reacts vigorously with iodinemonochloride.

(iv) Hazardous decomposition products: Toxic fumes of cadmium and sulfur oxides.

(c) Spill, leak, and disposal procedures.

(i) Steps to be taken if the material is released or spilled. Do not touch spilled material. Stop leak if you can do it without risk. For small, dry spills, with a clean shovel place material into clean, dry container and cover. Move containers from spill area.

(ii) For larger spills, dike far ahead of spill for later disposal. Keep unnecessary people away. Isolate hazard and deny entry.

(4) **Cadmium chloride**.

(a) Physical and chemical data.

(i) Substance identification.

Chemical name: Cadmium chloride.

Formula: CdC12.

Molecular weight: 183.3.

CAS No. 10108-64-2.

Other identifiers: RTECS EY0175000.

Synonyms: Caddy; Cadmium dichloride; NA 2570 (DOT); UI-CAD; dichlorocadmium.

(ii) Physical data.

Boiling point (760 mm Hg): 960 degrees C.

Melting point: 568 degrees C.

Specific gravity: (H_2O = 1 @ 20°C): 4.05.

Solubility: Soluble in water (140 g/100 cc); soluble in acetone.

Appearance: Small, white crystals.

(b) Fire, explosion, and reactivity data.

(i) Fire.

Fire and explosion hazards: Negligible fire and negligible explosion hazard in dust form when exposed to heat or flame.

Flash point: Nonflammable.

Extinguishing media: Dry chemical, carbon dioxide, water spray, or foam.

(ii) Reactivity. Conditions contributing to instability: Generally stable under normal temperatures and pressures.

(iii) Incompatibilities: Bromine triflouride [trifluoride] rapidly attacks cadmium chloride. A mixture of potassium and cadmium chloride may produce a strong explosion on impact.

(iv) Hazardous decomposition products: Thermal decomposition may release toxic fumes of hydrogen chloride, chloride, chlorine or oxides of cadmium.

(c) Spill, leak, and disposal procedures.

(i) Steps to be taken if the materials is released or spilled. Do not touch spilled material. Stop leak if you can do it without risk. For small, dry spills, with a clean shovel place material into clean, dry container and cover. Move containers from spill area. For larger spills, dike far ahead of spill for later disposal. Keep unnecessary people away. Isolate hazard and deny entry.

(ii) The Superfund Amendments and Reauthorization Act of 1986 Section 304 requires that a release equal to or greater than the reportable quantity for this substance (one hundred pounds) must be immediately reported to the local emergency planning committee, the state emergency response commission, and the National Response Center (800) 424-8802; in Washington, DC Metropolitan area (202) 426-2675.

WAC 296-62-07447 Appendix D--Occupational health history interview with reference to cadmium exposure directions.

(To be read by employee and signed prior to the interview.)

Please answer the questions you will be asked as completely and carefully as you can. These questions are asked of everyone who works with cadmium. You will also be asked to give blood and urine samples. The doctor will give your employer a written opinion on whether you are physically capable of working with cadmium. Legally, the doctor cannot share personal information you may tell them with your employer. The following information is considered strictly confidential. The results of the tests will go to you, your doctor and your employer. You will also receive an information sheet explaining the results of any biological monitoring or physical examinations performed. If you are just being hired, the results of this interview and examination will be used to:

(1) Establish your health status and see if working with cadmium might be expected to cause unusual problems;

(2) Determine your health status today and see if there are changes over time;

(3) See if you can wear a respirator safely. If you are not a new hire: WISHA says that everyone who works with cadmium can have periodic medical examinations performed by a doctor. The reasons for this are:

(a) If there are changes in your health, either because of cadmium or some other reason, to find them early;

(b) To prevent kidney damage.

Please sign below.
I have read these directions and understand them:

_____
Employee signature

_____
Date

Thank you for answering these questions. (Suggested Format)
Name:_____
Age:_____
Social Security #:_____
Company:_____Job:_____
Type of Preplacement Exam: [ ] Periodic [ ] Termination [ ] Initial [ ] Other
Blood Pressure:_____Pulse
Rate:_____

1. How long have you worked at the job listed above?
[ ] Not yet hired [ ] Number of months [ ] Number of years
2. Job Duties
etc._____
_____
3. Have you ever been told by a doctor that you had bronchitis? [ ] Yes [ ] No

If yes, how long ago? [ ] Number of months [ ] Number of years

4. Have you ever been told by a doctor that you had emphysema? [ ] Yes [ ] No
If yes, how long ago? [ ] Number of years [ ] Number of months

5. Have you ever been told by a doctor that you had other lung problems? [ ] Yes [ ] No
If yes, please describe type of lung problems and when you had these problems:

_____

6. In the past year, have you had a cough? [ ] Yes [ ] No
If yes, did you cough up sputum? [ ] Yes [ ] No
If yes, how long did the cough with sputum production last? [ ] Less than 3 months [ ] 3 months or longer
If yes, for how many years have you had episodes of cough with sputum production lasting this long? [ ] Less than one [ ] 1 [ ] 2 [ ] Longer than 2

7. Have you ever smoked cigarettes? [ ] Yes [ ] No

8. Do you now smoke cigarettes? [ ] Yes [ ] No

9. If you smoke or have smoked cigarettes, for how many years have you smoked, or did you smoke? [ ] Less than 1 year [ ] Number of years
What is or was the greatest number of packs per day that you have smoked? [ ] Number of packs
If you quit smoking cigarettes, how many years ago did you quit?
[ ] Less than 1 year [ ] Number of years
How many packs a day do you now smoke? [ ] Number of packs per day

10. Have you ever been told by a doctor that you had a kidney or urinary tract disease or disorder? [ ] Yes [ ] No

11. Have you ever had any of these disorders?

Kidney stones	[ ] Yes [ ] No
Protein in urine	[ ] Yes [ ] No
Blood in urine	[ ] Yes [ ] No
Difficulty urinating	[ ] Yes [ ] No
Other kidney/Urinary disorders	[ ] Yes [ ] No

Please describe problems, age, treatment, and follow up for any kidney or urinary problems you have had:

_____

_____

_____

12. Have you ever been told by a doctor or other health care provider who took your blood pressure that your blood pressure was high? [ ] Yes [ ] No

13 Have you ever been advised to take any blood pressure medication? [ ] Yes [ ] No

14. Are you presently taking any blood pressure medication? [ ] Yes [ ] No

15. Are you presently taking any other medication? [ ] Yes [ ] No

16. Please list any blood pressure or other medications and describe how long you have been taking each one:
Medicine:_____
_____
_____
How Long Taken:_____
17. Have you ever been told by a doctor that you have diabetes? (sugar in your blood or urine) [ ] Yes [ ] No
If yes, do you presently see a doctor about your diabetes? [ ] Yes [ ] No
If yes, how do you control your blood sugar? [ ] Diet alone [ ] Diet plus oral medicine [ ] Diet plus insulin (injection)
18. Have you ever been told by a doctor that you had:
Anemia ? [ ] Yes [ ] No
A low blood count? [ ] Yes [ ] No
19. Do you presently feel that you tire or run out of energy sooner than normal or sooner than other people your age? [ ] Yes [ ] No
If yes, for how long have you felt that you tire easily? [ ] Less than 1 year [ ] Number of years
20. Have you given blood within the last year? [ ] Yes [ ] No
If yes, how many times? [ ] Number of times
How long ago was the last time you gave blood? [ ] Less than 1 month [ ] Number of months
21. Within the last year have you had any injuries with heavy bleeding? [ ] Yes [ ] No
If yes, how long ago? [ ] Less than 1 month [ ] Number of months describe:
22. Have you recently had any surgery? [ ] Yes [ ] No If yes, please describe:_____
_____
23. Have you seen any blood lately in your stool or after a bowel movement? [ ] Yes [ ] No
24. Have you ever had a test for blood in your stool? [ ] Yes [ ] No
If yes, did the test show any blood in the stool? [ ] Yes [ ] No
What further evaluation and treatment were done?_____
_____
_____

The following questions pertain to the ability to wear a respirator. Additional information for the physician can be found in The Respiratory Protective Devices Manual.

25. Have you ever been told by a doctor that you have asthma? [ ] Yes [ ] No
If yes, are you presently taking any medication for asthma?
Mark all that apply. [ ] Shots [ ] Pills [ ] Inhaler
26. Have you ever had a heart attack? [ ] Yes [ ] No
If yes, how long ago? [ ] Number of years [ ] Number of months
27. Have you ever had pains in your chest? [ ] Yes [ ] No
If yes, when did it usually happen?
[ ] While resting [ ] While working [ ] While exercising [ ] Activity didn't matter
28. Have you ever had a thyroid problem? [ ] Yes [ ] No

29. Have you ever had a seizure or fits? [ ] Yes [ ] No
30. Have you ever had a stroke (cerebrovascular accident)? [ ] Yes [ ] No
31. Have you ever had a ruptured eardrum or a serious hearing problem? [ ] Yes [ ] No
32. Do you now have a claustrophobia, meaning fear of crowded or closed in spaces or any psychological problems that would make it hard for you to wear a respirator? [ ] Yes [ ] No

The following questions pertain to reproductive history.

33. Have you or your partner had a problem conceiving a child? [ ] Yes [ ] No
    If yes, specify: [ ] Self [ ] Present mate [ ] Previous mate
34. Have you or your partner consulted a physician for a fertility or other reproductive problem?
    [ ] Yes [ ] No
    If yes, specify who consulted the physician: [ ] Self [ ] Spouse/partner [ ] Self and partner
    If yes, specify diagnosis made:_____
    _____
35. Have you or your partner ever conceived a child resulting in a miscarriage, still birth or deformed offspring? [ ] Yes [ ] No
    If yes, specify: [ ] Miscarriage [ ] Still birth [ ] Deformed offspring
    If outcome was a deformed offspring, please specify type:_____
    _____
    _____
    36. Was this outcome a result of a pregnancy of: [ ] Yours with present partner [ ] Yours with a previous partner
37. Did the timing of any abnormal pregnancy outcome coincide with present employment?
    [ ] Yes [ ] No List dates of occurrences:_____
    _____
    _____
38. What is the occupation of your spouse or partner?
    _____
    _____
    _____

For Women Only

39. Do you have menstrual periods? [ ] Yes [ ] No
Have you had menstrual irregularities? [ ] Yes [ ] No
If yes, specify
type:_____
If yes, what was the approximated date this problem
began?_____
Approximate date problem
stopped?_____

For Men Only

40. Have you ever been diagnosed by a physician as having prostate gland problem(s)?
[ ] Yes [ ] No
If yes, please describe type of problem(s) and what was done to evaluate and treat the problem(s):
_____
_____

WAC 296-62-07449 Appendix E--Cadmium in workplace atmospheres.

Method number: ID-189 (OSHA); (ICP/MS) 0009 (WISHA)

Matrix: Air

WISHA permissible exposure limits: 5 $\mu g/m^3$ (TWA), 2.5 $\mu g/m^3$ (action level TWA)

Collection procedure: A known volume of air is drawn through a 37-mm diameter filter cassette containing a 0.8 µm mixed cellulose ester membrane filter (MCEF).

Recommended air volume: 960 L

Recommended sampling rate: 2.0 L/min

Analytical procedure: Air filter samples are digested with nitric acid. After digestion, a small amount of hydrochloric acid is added. The samples are then diluted to volume with deionized water and analyzed by either flame atomic absorption spectroscopy (AAS) or flameless atomic absorption spectroscopy using a heated graphite furnace atomizer (AAS-HGA).

Detection limits:

Qualitative: 0.2 $\mu g/m^3$ for a 200 L sample by Flame AAS, 0.007 $\mu g/m^3$ for a 60 L sample by AAS-HGA

Quantitative: 0.70 $\mu g/m^3$ for a 200 L sample by Flame AAS, 0.025 $\mu g/m^3$ for a 60 L sample by AAS-HGA

Precision and accuracy: (Flame AAS Analysis and AAS-HGA Analysis):

Validation level: 2.5 to 10 $\mu g/m^3$ for a 400 L air vol, 1.25 to 5.0 $\mu g/m^3$ for a 60 L air vol CV_1 (pooled): 0.010, 0.043

Analytical bias: +4.0%, -5.8%

Overall analytical error: ±6.0%, ±14.2%

Method classification: Validated Date: June, 1992

Inorganic Service Branch II, OSHA Salt Lake Technical Center, Salt Lake City, Utah
Commercial manufacturers and products mentioned in this method are for descriptive use only and do not constitute endorsements by USDOL-OSHA. Similar products from other sources can be substituted.

(1) **Introduction**.

(a) Scope.

This method describes the collection of airborne elemental cadmium and cadmium compounds on 0.8 µm mixed cellulose ester membrane filters and their subsequent analysis by either flame atomic absorption spectroscopy (AAS) or flameless atomic absorption spectroscopy using a heated graphite furnace atomizer (AAS-HGA). It is applicable for both TWA and action level TWA permissible exposure level (PEL) measurements. The two atomic absorption analytical techniques included in the method do not differentiate between cadmium fume and cadmium dust samples. They also do not differentiate between elemental cadmium and its compounds.

(b) Principle.

Airborne elemental cadmium and cadmium compounds are collected on a 0.8 µm mixed cellulose ester membrane filter (MCEF). The air filter samples are digested with concentrated nitric acid to destroy the organic matrix and dissolve the cadmium analytes. After digestion, a small amount of concentrated hydrochloric acid is added to help dissolve other metals which may be present. The samples are diluted to volume with deionized water and then aspirated into the oxidizing air/acetylene flame of an atomic absorption spectrophotometer for analysis of elemental cadmium. If the concentration of cadmium in a sample solution is too low for quantitation by this flame AAS analytical technique, and the sample is to be averaged with other samples for TWA calculations, aliquots of the sample and a matrix modifier are later injected onto a L'vov platform in a pyrolytically-coated graphite tube of a Zeeman atomic absorption spectrophotometer/graphite furnace assembly for analysis of elemental cadmium. The matrix modifier is added to stabilize the cadmium metal and minimize sodium chloride as an interference during the high temperature charring step of the analysis subsection (5)(a) and (b) of this section.

(c) History.

Previously, two OSHA sampling and analytical methods for cadmium were used concurrently WAC 296-62-07449 (5)(c) and (d). Both of these methods also required 0.8 µm mixed cellulose ester membrane filters for the collection of air samples. These cadmium air filter samples were analyzed by either flame atomic absorption spectroscopy (subsection (5)(c) of this section) or inductively coupled plasma/atomic emission spectroscopy (ICP-AES) (subsection (5)(d) of this section). Neither of these two analytical methods have adequate sensitivity for measuring workplace exposure to airborne cadmium at the new lower TWA and action level TWA PEL levels when

consecutive samples are taken on one employee and the sample results need to be averaged with other samples to determine a single TWA. The inclusion of two atomic absorption analytical techniques in the new sampling and analysis method for airborne cadmium permits quantitation of sample results over a broad range of exposure levels and sampling periods. The flame AAS analytical technique included in this method is similar to the previous procedure given in the General Metals Method ID-121 (subsection (5)(c) of this section) with some modifications. The sensitivity of the AAS-HGA analytical technique included in this method is adequate to measure exposure levels at 1/10 the action level TWA, or lower, when less than full-shift samples need to be averaged together.

(d) Properties (subsection (5)(e) of this section).

Elemental cadmium is a silver-white, blue-tinged, lustrous metal which is easily cut with a knife. It is slowly oxidized by moist air to form cadmium oxide. It is insoluble in water, but reacts readily with dilute nitric acid. Some of the physical properties and other descriptive information of elemental cadmium are given below:

CAS No	***7440-43-9***
Atomic Number	48
Atomic Symbol	Cd
Atomic Weight	112.41
Melting Point	321°C
Boiling Point	765°C
Density	8.65 g/mL (25°C)

The properties of specific cadmium compounds are described in reference subsection (5)(e) of this section.

(e) Method performance.

A synopsis of method performance is presented below. Further information can be found in subsection (4) of this section.

(i) The qualitative and quantitative detection limits for the flame AAS analytical technique are 0.04 µg (0.004 µg/mL) and 0.14 µg (0.014 µg/mL) cadmium, respectively, for a 10 mL solution volume. These correspond, respectively, to 0.2 $\mu g/m^3$ and 0.70 $\mu g/m^3$ for a 200 L air volume.

(ii) The qualitative and quantitative detection limits for the AAS-HGA analytical technique are 0.44 ng (0.044 ng/mL) and 1.5 ng (0.15 ng/mL) cadmium, respectively, for a 10 mL solution volume. These correspond, respectively, to 0.007 $\mu g/m^3$ and 0.025 $\mu g/m^3$ for a 60 L air volume.

(iii) The average recovery by the flame AAS analytical technique of 17 spiked MCEF samples containing cadmium in the range of 0.5 to 2.0 times the TWA target concentration of 5 $\mu g/m^3$ (assuming a 400 L air volume) was 104.0% with a pooled coefficient of variation (CV_1) of 0.010. The flame analytical technique exhibited a positive bias of +4.0% for the validated concentration range. The overall analytical error (OAE) for the flame AAS analytical technique was ±6.0%.

(iv) The average recovery by the AAS-HGA analytical technique of 18 spiked MCEF samples containing cadmium in the range of 0.5 to 2.0 times the action level TWA target concentration of 2.5 µg/m^3 (assuming a 60 L air volume) was 94.2% with a pooled coefficient of variation (CV_1) of 0.043. The AAS-HGA analytical technique exhibited a negative bias of -5.8% for the validated concentration range. The overall analytical error (OAE) for the AAS-HGA analytical technique was ±14.2%.

(v) Sensitivity in flame atomic absorption is defined as the characteristic concentration of an element required to produce a signal of 1% absorbance (0.0044 absorbance units). Sensitivity values are listed for each element by the atomic absorption spectrophotometer manufacturer and have proved to be a very valuable diagnostic tool to determine if instrumental parameters are optimized and if the instrument is performing up to specification. The sensitivity of the spectrophotometer used in the validation of the flame AAS analytical technique agreed with the manufacturer specifications (subsection (5)(f) of this section); the 2 µg/mL cadmium standard gave an absorbance reading of 0.350 abs. units.

(vi) Sensitivity in graphite furnace atomic absorption is defined in terms of the characteristic mass, the number of picograms required to give an integrated absorbance value of 0.0044 absorbance-second (subsection (5)(g) of this section). Data suggests that under stabilized temperature platform furnace (STPF) conditions (see (f)(ii) of this subsection), characteristic mass values are transferable between properly functioning instruments to an accuracy of about twenty percent (subsection (5)(b) of this section). The characteristic mass for STPF analysis of cadmium with Zeeman background correction listed by the manufacturer of the instrument used in the validation of the AAS-HGA analytical technique was 0.35 pg. The experimental characteristic mass value observed during the determination of the working range and detection limits of the AAS-HGA analytical technique was 0.41 pg.

(f) Interferences.

(i) High concentrations of silicate interfere in determining cadmium by flame AAS (subsection (5)(f) of this section). However, silicates are not significantly soluble in the acid matrix used to prepare the samples.

(ii) Interferences, such as background absorption, are reduced to a minimum in the AAS-HGA analytical technique by taking full advantage of the stabilized temperature platform furnace (STPF) concept. STPF includes all of the following parameters (subsection (5)(b) of this section):

(A) Integrated absorbance;

(B) Fast instrument electronics and sampling frequency;

(C) Background correction;

(D) Maximum power heating;

(E) Atomization off the L'vov platform in a pyrolytically coated graphite tube;

(F) Gas stop during atomization;

(G) Use of matrix modifiers.

(g) Toxicology (subsection (5)(n) of this section).

Information listed within this section is synopsis of current knowledge of the physiological effects of cadmium and is not intended to be used as the basis for WISHA policy. IARC classifies cadmium and certain of its compounds as Group 2A carcinogens (probably carcinogenic to humans). Cadmium fume is intensely irritating to the respiratory tract. Workplace exposure to cadmium can cause both chronic and acute effects. Acute effects include tracheobronchitis, pneumonitis, and pulmonary edema. Chronic effects include anemia, rhinitis/anosmia, pulmonary emphysema, proteinuria and lung cancer. The primary target organs for chronic disease are the kidneys (noncarcinogenic) and the lungs (carcinogenic).

(2) **Sampling**.

(a) Apparatus.

(i) Filter cassette unit for air sampling: A 37-mm diameter mixed cellulose ester membrane filter with a pore size of 0.8 µm contained in a 37-mm polystyrene two- or three-piece cassette filter holder (part no. MAWP 037 A0, Millipore Corp., Bedford, MA). The filter is supported with a cellulose backup pad. The cassette is sealed prior to use with a shrinkable gel band.

(ii) A calibrated personal sampling pump whose flow is determined to an accuracy of ±5% at the recommended flow rate with the filter cassette unit in line.

(b) Procedure

(i) Attach the prepared cassette to the calibrated sampling pump (the backup pad should face the pump) using flexible tubing. Place the sampling device on the employee such that air is sampled from the breathing zone.

(ii) Collect air samples at a flow rate of 2.0 L/min. If the filter does not become overloaded, a full-shift (at least seven hours) sample is strongly recommended for TWA and action level TWA measurements with a maximum air volume of 960 L. If overloading occurs, collect consecutive air samples for shorter sampling periods to cover the full workshift.

(iii) Replace the end plugs into the filter cassettes immediately after sampling. Record the sampling conditions.

(iv) Securely wrap each sample filter cassette end-to-end with a sample seal.

(v) Submit at least one blank sample. With each set of air samples. The blank sample should be handled the same as the other samples except that no air is drawn through it.

(vi) Ship the samples to the laboratory for analysis as soon as possible in a suitable container designed to prevent damage in transit.

(3) **Analysis**.

(a) Safety precautions.

(i) Wear safety glasses, protective clothing and gloves at all times.

(ii) Handle acid solutions with care. Handle all cadmium samples and solutions with extra care (see subsection (1)(g) of this section). Avoid their direct contact with work area surfaces, eyes, skin and clothes. Flush acid solutions which contact the skin or eyes with copious amounts of water.

(iii) Perform all acid digestions and acid dilutions in an exhaust hood while wearing a face shield. To avoid exposure to acid vapors, do not remove beakers containing concentrated acid solutions from the exhaust hood until they have returned to room temperature and have been diluted or emptied.

(iv) Exercise care when using laboratory glassware. Do not use chipped pipets, volumetric flasks, beakers or any glassware with sharp edges exposed in order to avoid the possibility of cuts or abrasions.

(v) Never pipet by mouth.

(vi) Refer to the instrument instruction manuals and SOPs (subsection (5)(h) and (i) of this section) for proper and safe operation of the atomic absorption spectrophotometer, raphite furnace atomizer and associated equipment.

(vii) Because metallic elements and other toxic substances are vaporized during AAS flame or graphite furnace atomizer operation, it is imperative that an exhaust vent be used. Always ensure that the exhaust system is operating properly during instrument use.

(b) Apparatus for sample and standard preparation.

(i) Hot plate, capable of reaching 150°C, installed in an exhaust hood.

(ii) Phillips beakers, 125 mL.

(iii) Bottles, narrow-mouth, polyethylene or glass with leakproof caps: used for storage of standards and matrix modifier.

(iv) Volumetric flasks, volumetric pipets, beakers and other associated general laboratory glassware.

(v) Forceps and other associated general laboratory equipment.

(c) Apparatus for flame AAS analysis.

(i) Atomic absorption spectrophotometer consisting of a(an):

Nebulizer and burner head; pressure regulating devices capable of maintaining constant oxidant and fuel pressures; optical system capable of isolating the desired wavelength of radiation (228.8 nm); adjustable slit; light measuring and amplifying device; display, strip chart, or computer interface for indicating the amount of absorbed radiation; cadmium hollow cathode lamp or electrodeless discharge lamp (EDL) and power supply.

(ii) Oxidant: Compressed air, filtered to remove water, oil and other foreign substances.

(iii) Fuel: Standard commercially available tanks of acetylene dissolved in acetone; tanks should be equipped with flash arresters.

Caution: Do not use grades of acetylene containing solvents other than acetone because they may damage the PVC tubing used in some instruments.

(iv) Pressure-reducing valves: Two gauge, two-stage pressure regulators to maintain fuel and oxidant pressures somewhat higher than the controlled operating pressures of the instrument.

(v) Exhaust vent installed directly above the spectrophotometer burner head.

(d) Apparatus for AAS-HGA analysis.

(i) Atomic absorption spectrophotometer consisting of a(an):

Heated graphite furnace atomizer (HGA) with argon purge system pressure-regulating devices capable of maintaining constant argon purge pressure; optical system capable of isolating the desired wavelength of radiation (228.8 nm); adjustable slit; light measuring and amplifying device; display, strip chart, or computer interface for indicating the amount of absorbed radiation (as integrated absorbance, peak area); background corrector: Zeeman or deuterium arc. The Zeeman background corrector is recommended; cadmium hollow cathode lamp or electrodeless discharge lamp (EDL) and power supply; autosampler capable of accurately injecting 5 to 20 µL sample aliquots onto the L'vov Platform in a graphite tube.

(ii) Pyrolytically coated graphite tubes containing solid, pyrolytic L'vov platforms.

(iii) Polyethylene sample cups, 2.0 to 2.5 mL, for use with the autosampler.

(iv) Inert purge gas for graphite furnace atomizer: Compressed gas cylinder of purified argon.

(v) Two gauge, two-stage pressure regulator for the argon gas cylinder.

(vi) Cooling water supply for graphite furnace atomizer.

(vii) Exhaust vent installed directly above the graphite furnace atomizer.

(e) Reagents. All reagents should be ACS analytical reagent grade or better.

(i) Deionized water with a specific conductance of less than 10 µS.

(ii) Concentrated nitric acid, HNO_3.

(iii) Concentrated hydrochloric acid, HCl.

(iv) Ammonium phosphate, monobasic, $NH_4H_2PO_4$.

(v) Magnesium nitrate, $Mg(NO_3)_2 * 6H_2O$.

(vi) Diluting solution (4% HNO_3, 0.4% HCl): Add 40 mL HNO_3 and 4 mL HCl carefully to approximately 500 mL deionized water and dilute to 1 L with deionized water.

(vii) Cadmium standard stock solution, 1,000 µg/mL: Use a commercially available certified 1,000 µg/mL cadmium standard or, alternatively, dissolve 1.0000 g of cadmium metal in a minimum volume of 1:1 HCl and dilute to 1 L with 4% HNO_3. Observe expiration dates of commercial standards. Properly dispose of commercial standards with no expiration dates or prepared standards one year after their receipt or preparation date.

(viii) Matrix modifier for AAS-HGA analysis: Dissolve 1.0 g $NH_4H_2PO_4$ and 0.15 g $Mg(NO_3)_2 * 6H_2O$ in approximately 200 mL deionized water. Add 1 mL HNO_3 and dilute to 500 mL with deionized water.

(ix) Nitric Acid, 1:1 HNO_3/DI H_2O mixture: Carefully add a measured volume of concentrated HNO_3 to an equal volume of DI H_2O.

(x) Nitric acid, 10% v/v: Carefully add 100 mL of concentrated HNO_3 to 500 mL of DI H_2O and dilute to 1 L.

(f) Glassware preparation.

(i) Clean Phillips beakers by refluxing with 1:1 nitric acid on a hot plate in a fume hood. Thoroughly rinse with deionized water and invert the beakers to allow them to drain dry.

(ii) Rinse volumetric flasks and all other glassware with 10% nitric acid and deionized water prior to use.

(g) Standard preparation for flame AAS analysis.

(i) Dilute stock solutions: Prepare 1, 5, 10 and 100 µg/mL cadmium standard stock solutions by making appropriate serial dilutions of 1,000 µg/mL cadmium standard stock solution with the diluting solution described in (e)(vi) of this subsection.

(ii) Working standards: Prepare cadmium working standards in the range of 0.02 to 2.0 µg/mL by making appropriate serial dilutions of the dilute stock solutions with the same diluting solution. A suggested method of preparation of the working standards is given below.

Working Standard (µg/mL)	***Std Solution (µg/mL)***	***Aliquot (mL)***	***Final vol (mL)***
0.02	1	10	500
0.05	5	5	500
0.1	10	5	500
0.2	10	10	500
0.5	10	25	500
1	100	5	500
2	100	10	500

Store the working standards in 500-mL, narrow-mouth polyethylene or glass bottles with leak proof caps. Prepare every twelve months.

(h) Standard preparation for AAS-HGA analysis.

(i) Dilute stock solutions: Prepare 10, 100 and 1,000 ng/mL cadmium standard stock solutions by making appropriate ten-fold serial dilutions of the 1,000 µg/mL cadmium standard stock solution with the diluting solution described in (e)(vi) of this subsection.

(ii) Working standards: Prepare cadmium working standards in the range of 0.2 to 20 ng/mL by making appropriate serial dilutions of the dilute stock solutions with the same diluting solution. A suggested method of preparation of the working standards is given below.

Working Standard (ng/mL)	***Std Solution (ng/mL)***	***Aliquot (mL)***	***Final vol (mL)***
0.2	10	2	100
0.5	10	5	100
1	10	10	100
2	100	2	100
5	100	5	100
10	100	10	100
20	1,000	2	100

Store the working standards in narrow-mouth polyethylene or glass bottles with leakproof caps. Prepare monthly.

(i) Sample preparation.

(i) Carefully transfer each sample filter with forceps from its filter cassette unit to a clean, separate 125-mL Phillips beaker along with any loose dust found in the cassette. Label each Phillips beaker with the appropriate sample number.

(ii) Digest the sample by adding 5 mL of concentrated nitric acid (HNO_3) to each Phillips beaker containing an air filter sample. Place the Phillips beakers on a hot plate in an exhaust hood and heat the samples until approximately 0.5 mL remains. The sample solution in each Phillips beaker should become clear. If it is not clear, digest the sample with another portion of concentrated nitric acid.

(iii) After completing the HNO_3 digestion and cooling the samples, add 40 µL (2 drops) of concentrated HCl to each air sample solution and then swirl the contents. Carefully add about 5 mL of deionized water by pouring it down the inside of each beaker.

(iv) Quantitatively transfer each cooled air sample solution from each Phillips beaker to a clean 10-mL volumetric flask. Dilute each flask to volume with deionized water and mix well.

(j) Flame AAS analysis.

Analyze all of the air samples for their cadmium content by flame atomic absorption spectroscopy (AAS) according to the instructions given below.

(i) Set up the atomic absorption spectrophotometer for the air/acetylene flame analysis of cadmium according to the SOP (subsection (5)(h) of this section) or the manufacturer's operational instructions. For the source lamp, use the cadmium hollow cathode or electrodeless discharge lamp operated at the manufacturer's recommended rating for continuous operation. Allow the lamp to warm up ten to twenty minutes or until the energy output stabilizes. Optimize conditions such as lamp position, burner head alignment, fuel and oxidant flow rates, etc. See the SOP or specific instrument manuals for details. Instrumental parameters for the Perkin-Elmer Model 603 used in the validation of this method are given in subsection (6) of this section.

(ii) Aspirate and measure the absorbance of a standard solution of cadmium. The standard concentration should be within the linear range. For the instrumentation used in the validation of this method a 2 µg/mL cadmium standard gives a net absorbance reading of about 0.350 abs. units (see subsection (1)(e)(v) of this section) when the instrument and the source lamp are performing to manufacturer specifications.

(iii) To increase instrument response, scale expand the absorbance reading of the aspirated 2 µg/mL working standard approximately four times. Increase the integration time to at least three seconds to reduce signal noise.

(iv) Autozero the instrument while aspirating a deionized water blank. Monitor the variation in the baseline absorbance reading (baseline noise) for a few minutes to insure that the instrument, source lamp and associated equipment are in good operating condition.

(v) Aspirate the working standards and samples directly into the flame and record their absorbance readings. Aspirate the deionized water blank immediately after every standard or sample to correct for and monitor any baseline drift and noise. Record the baseline absorbance reading of each deionized water blank. Label each standard and sample reading and its accompanying baseline reading.

(vi) It is recommended that the entire series of working standards be analyzed at the beginning and end of the analysis of a set of samples to establish a concentration-response curve, ensure that the standard readings agree with each other and are reproducible. Also, analyze a working standard after every five or six samples to monitor the performance of the spectrophotometer. Standard readings should agree within ±10 to 15% of the readings obtained at the beginning of the analysis.

(vii) Bracket the sample readings with standards during the analysis. If the absorbance reading of a sample is above the absorbance reading of the highest working standard, dilute the sample with diluting solution and reanalyze. Use the appropriate dilution factor in the calculations.

(viii) Repeat the analysis of approximately ten percent of the samples for a check of precision.

(ix) If possible, analyze quality control samples from an independent source as a check on analytical recovery and precision.

(x) Record the final instrument settings at the end of the analysis. Date and label the output.

(k) AAS-HGA analysis.

Initially analyze all of the air samples for their cadmium content by flame atomic absorption spectroscopy (AAS) according to the instructions given in (j) of this subsection. If the concentration of cadmium in a sample solution is less than three times the quantitative detection limit (0.04 µg/mL (40 ng/mL) for the instrumentation used in the validation) and the sample results are to be averaged with other samples for TWA calculations, proceed with the AAS-HGA analysis of the sample as described below.

(i) Set up the atomic absorption spectrophotometer and HGA for flameless atomic absorption analysis of cadmium according to the SOP (subsection (5)(i) of this section) or the manufacturer's operational instructions and allow the instrument to stabilize. The graphite furnace atomizer is equipped with a pyrolytically coated graphite tube containing a pyrolytic platform. For the source lamp, use a cadmium hollow cathode or electrodeless discharge lamp operated at the manufacturer's recommended setting for graphite furnace operation. The Zeeman background corrector and EDL are recommended for use with the L'vov platform. Instrumental parameters for the Perkin-Elmer Model 5100 spectrophotometer and Zeeman HGA-600 graphite furnace used in the validation of this method are given in subsection (7) of this section.

(ii) Optimize the energy reading of the spectrophotometer at 228.8 nm by adjusting the lamp position and the wavelength according to the manufacturer's instructions.

(iii) Set up the autosampler to inject a 5-µL aliquot of the working standard, sample or reagent blank solution onto the L'vov platform along with a 10-µL overlay of the matrix modifier.

(iv) Analyze the reagent blank (diluting solution, (e)(vi) of this subsection) and then autozero the instrument before starting the analysis of a set of samples. It is recommended that the reagent blank be analyzed several times during the analysis to assure the integrated absorbance (peak area) reading remains at or near zero.

(v) Analyze a working standard approximately midway in the linear portion of the working standard range two or three times to check for reproducibility and sensitivity (see subsection (1)(e)(v) and (vi) of this section) before starting the analysis of samples. Calculate the experimental characteristic mass value from the average integrated absorbance reading and injection volume of the analyzed working standard. Compare this value to the manufacturer's suggested value as a check of proper instrument operation.

(vi) Analyze the reagent blank, working standard, and sample solutions. Record and label the peak area (abs-sec) readings and the peak and background peak profiles on the printer/plotter.

(vii) It is recommended the entire series of working standards be analyzed at the beginning and end of the analysis of a set of samples. Establish a concentration-response curve and ensure standard readings agree with each other and are reproducible. Also, analyze a working standard after every five or six samples to monitor the performance of the system. Standard readings should agree within ±15% of the readings obtained at the beginning of the analysis.

(viii) Bracket the sample readings with standards during the analysis. If the peak area reading of a sample is above the peak area reading of the highest working standard, dilute the sample with the diluting solution and reanalyze. Use the appropriate dilution factor in the calculations.

(ix) Repeat the analysis of approximately ten percent of the samples for a check of precision.

(x) If possible, analyze quality control samples from an independent source as a check of analytical recovery and precision.

(xi) Record the final instrument settings at the end of the analysis. Date and label the output.

(l) Calculations.

Note: Standards used for HGA analysis are in ng/mL. Total amounts of cadmium from calculations will be in ng (not µg) unless a prior conversion is made.

(i) Correct for baseline drift and noise in flame AAS analysis by subtracting each baseline absorbance reading from its corresponding working standard or sample absorbance reading to obtain the net absorbance reading for each standard and sample.

(ii) Use a least squares regression program to plot a concentration-response curve of net absorbance reading (or peak area for HGA analysis) versus concentration (µg/mL or ng/mL) of cadmium in each working standard.

(iii) Determine the concentration (µg/mL or ng/mL) of cadmium in each sample from the resulting concentration-response curve. If the concentration of cadmium in a sample solution is less than three times the quantitative detection limit (0.04 µg/mL (40 ng/mL) for the instrumentation used in the validation of the method) and if consecutive samples were taken on one employee and the sample results are to be averaged with other samples to determine a single TWA, reanalyze the sample by AAS-HGA as described in (k) of this subsection and report the AAS-HGA analytical results.

(iv) Calculate the total amount (µg or ng) of cadmium in each sample from the sample solution volume (mL):

W = (C)(sample vol, mL)(DF)

Where: W = Total cadmium in sample

C = Calculated concentration of cadmium

DF = Dilution Factor (if applicable)

(v) Make a blank correction for each air sample by subtracting the total amount of cadmium in the corresponding blank sample from the total amount of cadmium in the sample.

(vi) Calculate the concentration of cadmium in an air sample (mg/ m^3or µg/m^3) by using one of the following equations:

mg/m^3= W^{bc}/(Air vol sampled, L); or

µg/m^3= (W^{bc})(1,000 ng/µg)/(Air vol sampled, L)

Where: W^{bc} = blank corrected total µg cadmium in the sample.

(1µg = 1,000 ng)

(4) **Backup data**.

(a) Introduction.

(i) The purpose of this evaluation is to determine the analytical method recovery, working standard range, and qualitative and quantitative detection limits of the two atomic absorption analytical techniques included in this method. The evaluation consisted of the following experiments:

(A) An analysis of twenty-four samples (six samples each at 0.1, 0.5, 1 and 2 times the TWA-PEL) for the analytical method recovery study of the flame AAS analytical technique.

(B) An analysis of eighteen samples (six samples each at 0.5, 1 and 2 times the action level TWA-PEL) for the analytical method recovery study of the AAS-HGA analytical technique.

(C) Multiple analyses of the reagent blank and a series of standard solutions to determine the working standard range and the qualitative and quantitative detection limits for both atomic absorption analytical techniques.

(ii) The analytical method recovery results at all test levels were calculated from concentration-response curves and statistically examined for outliers at the ninety-nine percent confidence level. Possible outliers were determined using the Treatment of Outliers test (subsection (5)(j) of this section). In addition, the sample results of the two analytical techniques, at 0.5, 1.0 and 2.0 times their target concentrations, were tested for homogeneity of variances also at the ninety-nine percent confidence level. Homogeneity of the coefficients of variation was determined using the Bartlett's test (subsection (5)(k) of this section). The overall analytical error (OAE) at the ninety-five percent confidence level was calculated using the equation (subsection (5)(l) of this section):

$$OAE = \pm [\ |Bias| + (1.96)(CV_1\ (pooled))(100\%)]$$

(iii) A derivation of the International Union of Pure and Applied Chemistry (IUPAC) detection limit equation (subsection (5)(m) of this section) was used to determine the qualitative and quantitative detection limits for both atomic absorption analytical techniques:

$$C_{ld} = k(sd)/m \quad \text{(Equation 1)}$$

Where: C_{ld} = the smallest reliable detectable concentration an analytical instrument can determine at a given confidence level.

k = 3 for the Qualitative Detection Limit at the 99.86% Confidence Level

k = 10 for the Quantitative Detection Limit at the 99.99% Confidence Level.

sd = standard deviation of the reagent blank (Rbl) readings.

m = analytical sensitivity or slope as calculated by linear regression.

(iv) Collection efficiencies of metallic fume and dust atmospheres on 0.8-µm mixed cellulose ester membrane filters are well documented and have been shown to be excellent (subsection (5)(k) of this section). Since elemental cadmium and the cadmium component of cadmium compounds are nonvolatile, stability studies of cadmium spiked MCEF samples were not performed.

(b) Equipment.

(i) A Perkin-Elmer (PE) Model 603 spectrophotometer equipped with a manual gas control system, a stainless steel nebulizer, a burner mixing chamber, a flow spoiler and a 10 cm (one-slot) burner head was used in the experimental validation of the flame AAS analytical technique. A PE cadmium hollow cathode lamp, operated at the manufacturer's recommended current setting for continuous operation (4 mA), was used as the source lamp. Instrument parameters are listed in subsection (6) of this section.

(ii) A PE Model 5100 spectrophotometer, Zeeman HGA-600 graphite furnace atomizer and AS-60 HGA autosampler were used in the experimental validation of the AAS-HGA analytical technique. The spectrophotometer was equipped with a PE Series 7700 professional computer and Model PR-310 printer. A PE System 2 cadmium electrodeless discharge lamp, operated at the manufacturer's recommended current setting for modulated operation (170 mA), was used as the source lamp. Instrument parameters are listed in subsection (7) of this section.

(c) Reagents.

(i) J.T. Baker Chem. Co. (Analyzed grade) concentrated nitric acid, 69.0-71.0%, and concentrated hydrochloric acid, 36.5-38.0%, were used to prepare the samples and standards.

(ii) Ammonium phosphate, monobasic, $NH_4H_2PO_4$ and magnesium nitrate hexahydrate, $Mg(NO_3)2.6\ H_2O$ both manufactured by the Mallinckrodt Chem. Co., were used to prepare the matrix modifier for AAS-HGA analysis.

(d) Standard preparation for flame AAS analysis.

(i) Dilute stock solutions: Prepared 0.01, 0.1, 1, 10 and 100 µg/mL cadmium standard stock solutions by making appropriate serial dilutions of a commercially available 1,000 µg/mL cadmium standard stock solution (RICCA Chemical Co., Lot# A102) with the diluting solution (4% HNO_3, 0.4% HCl).

(ii) Analyzed standards: Prepared cadmium standards in the range of 0.001 to 2.0 µg/mL by pipetting 2 to 10 mL of the appropriate dilute cadmium stock solution into a 100-mL volumetric flask and diluting to volume with the diluting solution. (See subsection (3)(g)(ii) of this section).

(e) Standard preparation for AAS-HGA analysis.

(i) Dilute stock solutions: Prepared 1, 10, 100 and 1,000 ng/mL cadmium standard stock solutions by making appropriate serial dilutions of a commercially available 1,000 µg/mL cadmium standard stock solution (J.T. Baker Chemical Co., Instra-analyzed, Lot# D22642) with the diluting solution (4% HNO_3, 0.4% HCl).

(ii) Analyzed standards: Prepared cadmium standards in the range of 0.1 to 40 ng/mL by pipetting 2 to 10 mL of the appropriate dilute cadmium stock solution into a 100-mL volumetric flask and diluting to volume with the diluting solution. (See subsection (3)(h)(ii) of this section).

(f) Detection limits and standard working range for flame AAS analysis.

(i) Analyzed the reagent blank solution and the entire series of cadmium standards in the range of 0.001 to 2.0 µg/mL three to six times according to the instructions given in subsection (3)(j) of this section. The diluting solution (4% HNO_3, 0.4% HCl) was used as the reagent blank. The integration time on the PE 603 spectrophotometer was set to 3.0 seconds and a four-fold expansion of the absorbance reading of the 2.0 µg/mL cadmium standard was made prior to analysis. The 2.0 µg/mL standard gave a net absorbance reading of 0.350 abs. units prior to expansion in agreement with the manufacturer's specifications (subsection (5)(f) of this section).

(ii) The net absorbance readings of the reagent blank and the low concentration Cd standards from 0.001 to 0.1 µg/mL and the statistical analysis of the results are shown in Table 1. The standard deviation, sd, of the six net absorbance readings of the reagent blank is 1.05 abs. units. The slope, m, as calculated by a linear regression plot of the net absorbance readings (shown in Table 2) of the 0.02 to 1.0 µg/mL cadmium standards versus their concentration is 772.7 abs. units/(µg/mL).

(iii) If these values for sd and the slope, m, are used in Eqn. 1 ((a)(ii) of this subsection), the qualitative and quantitative detection limits as determined by the IUPAC Method are:

C_{ld} = (3)(1.05 abs. units)/(772.7 abs. units/(µg/mL)) = 0.0041 µg/mL for the qualitative detection limit.

C_{ld} = (10)(1.05 abs. units)/(772.7 abs. units/(µg/mL)) = 0.014 µg/mL for the quantitative detection limit.

The qualitative and quantitative detection limits for the flame AAS analytical technique are 0.041 µg and 0.14 µg cadmium, respectively, for a 10 mL solution volume. These correspond, respectively, to 0.2 $\mu g/m^3$ and 0.70 $\mu g/m^3$ for a 200 L air volume.

(iv) The recommended Cd standard working range for flame AAS analysis is 0.02 to 2.0 µg/mL. The net absorbance readings of the reagent blank and the recommended working range standards and the statistical analysis of the results are shown in Table 2. The standard of lowest concentration in the working range, 0.02 µg/mL, is slightly greater than the calculated quantitative detection limit, 0.014 µg/mL. The standard of highest concentration in the working range, 2.0 µg/mL, is at the upper end of the linear working range suggested by the manufacturer (subsection (5)(f) of this section). Although the standard net absorbance readings are not strictly linear at concentrations above 0.5 µg/mL, the deviation from linearity is only about ten percent at the upper end of the recommended standard working range. The deviation from linearity is probably caused by the four-fold expansion of the signal suggested in the method. As shown in Table 2, the precision of the standard net absorbance readings are excellent throughout the recommended working range; the relative standard deviations of the readings range from 0.009 to 0.064.

(g) Detection limits and standard working range for AAS-HGA analysis.

(i) Analyzed the reagent blank solution and the entire series of cadmium standards in the range of 0.1 to 40 ng/mL according to the instructions given in subsection (3)(k) of this section. The diluting solution (4% HNO_3, 0.4% HCl) was used as the reagent blank. A fresh aliquot of the reagent blank and of each standard was used for every analysis. The experimental characteristic mass value was 0.41 pg, calculated from the average peak area (abs-sec) reading of the 5 ng/mL standard which is approximately midway in the linear portion of the working standard range. This agreed within twenty percent with the characteristic mass value, 0.35 pg, listed by the manufacturer of the instrument (subsection (5)(b) of this section).

(ii) The peak area (abs-sec) readings of the reagent blank and the low concentration Cd standards from 0.1 to 2.0 ng/mL and statistical analysis of the results are shown in Table 3. Five of the reagent blank peak area readings were zero and the sixth reading was 1 and was an outlier. The near lack of a blank signal does not satisfy a strict interpretation of the IUPAC method for determining the detection limits. Therefore, the standard deviation of the six peak area readings of the 0.2 ng/mL cadmium standard, 0.75 abs-sec, was used to calculate the detection limits by the IUPAC method. The slope, m, as calculated by a linear regression plot of the peak area (abs-sec) readings (shown in Table 4) of the 0.2 to 10 ng/mL cadmium standards versus their concentration is 51.5 abs-sec/(ng/mL).

(iii) If 0.75 abs-sec (sd) and 51.5 abs-sec/(ng/mL) (m) are used in Eqn. 1 ((a)(iii) of this subsection), the qualitative and quantitative detection limits as determined by the IUPAC method are:

C_{ld} = (3)(0.75 abs-sec)/(51.5 abs-sec/(ng/mL) = 0.044 ng/mL for the qualitative detection limit.

C_{ld} = (10)(0.75 abs-sec)/(51.5 abs-sec/(ng/mL) = 0.15 ng/mL for the quantitative detection limit.

The qualitative and quantitative detection limits for the AAS-HGA analytical technique are 0.44 ng and 1.5 ng cadmium, respectively, for a 10 mL solution volume. These correspond, respectively, to 0.007 $\mu g/m^3$ and 0.025 $\mu g/m^3$ for a 60 L air volume.

(iv) The peak area (abs-sec) readings of the Cd standards from 0.2 to 40 ng/mL and the statistical analysis of the results are given in Table 4. The recommended standard working range for AAS-HGA analysis is 0.2 to 20 ng/mL. The standard of lowest concentration in the recommended working range is slightly greater than the calculated quantitative detection limit, 0.15 ng/mL. The deviation from linearity of the peak area readings of the 20 ng/mL standard, the highest concentration standard in the recommended working range, is approximately ten percent. The deviations from linearity of the peak area readings of the thirty and forty ng/mL standards are significantly greater than ten percent.

As shown in Table 4, the precision of the peak area readings are satisfactory throughout the recommended working range; the relative standard deviations of the readings range from 0.025 to 0.083.

(h) Analytical method recovery for flame AAS analysis.

(i) Four sets of spiked MCEF samples were prepared by injecting 20 µL of 10, 50, 100 and 200 µg/mL dilute cadmium stock solutions on 37 mm diameter filters (part No. AAWP 037 00, Millipore Corp., Bedford, MA) with a calibrated micropipet. The dilute stock solutions were prepared by making appropriate serial dilutions of a commercially available 1,000 µg/mL cadmium standard stock solution (RICCA Chemical Co., Lot # A102) with the diluting solution (4% HNO_3, 0.4% HCl). Each set contained six samples and a sample blank. The amount of cadmium in the prepared sets were equivalent to 0.1, 0.5, 1.0 and 2.0 times the TWA PEL target concentration of 5 $\mu g/m^3$ for a 400 L air volume.

(ii) The air-dried spiked filters were digested and analyzed for their cadmium content by flame atomic absorption spectroscopy (AAS) following the procedure described in subsection (3) of this section. The 0.02 to 2.0 µg/mL cadmium standards (the suggested working range) were used in the analysis of the spiked filters.

(iii) The results of the analysis are given in Table 5. One result at 0.5 times the TWA PEL target concentration was an outlier and was excluded from statistical analysis. Experimental justification for rejecting it is that the outlier value was probably due to a spiking error. The coefficients of variation for the three test levels at 0.5 to 2.0 times the TWA PEL target concentration passed the Bartlett's test and were pooled.

(iv) The average recovery of the six spiked filter samples at 0.1 times the TWA PEL target concentration was 118.2% with a coefficient of variation (CV_1) of 0.128. The average recovery of the spiked filter samples in the range of 0.5 to 2.0 times the TWA target concentration was 104.0% with a pooled coefficient of variation (CV_1) of 0.010. Consequently, the analytical bias found in these spiked sample results over the tested concentration range was +4.0% and the OAE was ±6.0%.

(i) Analytical method recovery for AAS-HGA analysis.

(i) Three sets of spiked MCEF samples were prepared by injecting 15 µL of 5, 10 and 20 µg/mL dilute cadmium stock solutions on 37 mm diameter filters (part no. AAWP 037 00, Millipore Corp., Bedford, MA) with a calibrated micropipet. The dilute stock solutions were prepared by making appropriate serial dilutions of a commercially available certified 1,000 µg/mL cadmium standard stock solution (Fisher Chemical Co., Lot# 913438-24) with the diluting solution (4% HNO_3, 0.4% HCl). Each set contained six samples and a sample blank. The amount of cadmium in the prepared sets were equivalent to 0.5, 1 and 2 times the action level TWA target concentration of 2.5 µg/m^3 for a 60 L air volume.

(ii) The air-dried spiked filters were digested and analyzed for their cadmium content by flameless atomic absorption spectroscopy using a heated graphite furnace atomizer following the procedure described in subsection (3) of this section. A five-fold dilution of the spiked filter samples at 2 times the action level TWA was made prior to their analysis. The 0.05 to 20 ng/mL cadmium standards were used in the analysis of the spiked filters.

(iii) The results of the analysis are given in Table 6. There were no outliers. The coefficients of variation for the three test levels at 0.5 to 2.0 times the action level TWA PEL passed the Bartlett's test and were pooled. The average recovery of the spiked filter samples was 94.2% with a pooled coefficient of variation (CV_1) of 0.043. Consequently, the analytical bias was -5.8% and the OAE was ±14.2%.

(j) Conclusions.

The experiments performed in this evaluation show the two atomic absorption analytical techniques included in this method to be precise and accurate and have sufficient sensitivity to measure airborne cadmium over a broad range of exposure levels and sampling periods.

(5) **References**.

(a) Slavin, W. Graphite Furnace AAS--A Source Book; Perkin-Elmer Corp., Spectroscopy Div.: Ridgefield, CT, 1984; p. 18 and pp. 83-90.

(b) Grosser, Z., Ed.; Techniques in Graphite Furnace Atomic Absorption Spectrophotometry; Perkin-Elmer Corp., Spectroscopy Div.: Ridgefield, CT, 1985.

(c) Occupational Safety and Health Administration Salt Lake Technical Center: Metal and Metalloid Particulate in Workplace Atmospheres (Atomic Absorption) (USDOL/OSHA Method No. ID-121). In OSHA Analytical Methods Manual 2nd ed. Cincinnati, OH: American Conference of Governmental Industrial Hygienists, 1991.

(d) Occupational Safety and Health Administration Salt Lake Technical Center: Metal and Metalloid Particulate in Workplace Atmospheres (ICP) (USDOL/OSHA Method No. ID-125G). In OSHA Analytical Methods Manual 2nd ed. Cincinnati, OH: American Conference of Governmental Industrial Hygienists, 1991.

(e) Windholz, M., Ed.; The Merck Index, 10th ed.; Merck & Co.: Rahway, NJ, 1983.

(f) Analytical Methods for Atomic Absorption Spectrophotometry, The Perkin-Elmer Corporation: Norwalk, CT, 1982.

(g) Slavin, W., D.C. Manning, G. Carnrick, and E. Pruszkowska: Properties of the Cadmium Determination with the Platform Furnace and Zeeman Background Correction. Spectrochim. Acta 38B:1157-1170 (1983).

(h) Occupational Safety and Health Administration Salt Lake Technical Center: Standard Operating Procedure for Atomic Absorption. Salt Lake City, UT: USDOL/OSHA-SLTC, In progress.

(i) Occupational Safety and Health Administration Salt Lake Technical Center: AAS-HGA Standard Operating Procedure. Salt Lake City, UT: USDOL/OSHA- SLTC, In progress.

(j) Mandel, J.: Accuracy and Precision, Evaluation and Interpretation of Analytical Results, The Treatment of Outliers. In Treatise On Analytical Chemistry, 2nd ed., Vol.1, edited by I. M. Kolthoff and P. J. Elving. New York: John Wiley and Sons, 1978. pp. 282-285.

(k) National Institute for Occupational Safety and Health: Documentation of the NIOSH Validation Tests by D. Taylor, R. Kupel, and J. Bryant (DHEW/NIOSH Pub. No. 77-185). Cincinnati, OH: National Institute for Occupational Safety and Health, 1977.

(l) Occupational Safety and Health Administration Analytical Laboratory: Precision and Accuracy Data Protocol for Laboratory Validations. In OSHA Analytical Methods Manual 1st ed. Cincinnati, OH: American Conference of Governmental Industrial Hygienists (Pub. No. ISBN: 0-936712-66-X), 1985.

(m) Long, G.L. and J.D. Winefordner: Limit of Detection--A Closer Look at the IUPAC Definition. Anal. Chem. 55:712A-724A (1983).

(n) American Conference of Governmental Industrial Hygienists: Documentation of Threshold Limit Values and Biological Exposure Indices. 5th ed. Cincinnati, OH: American Conference of Governmental Industrial Hygienists, 1986.

Table 1-Cd Detection Limit Study [Flame AAS Analysis]			
STD (µg/mL)	Absorbance reading at 228.8 nm		Statistical analysis
Reagent blank	5 4 4	2 3 3	n = 6. mean = 3.50. std dev = 1.05. CV = 0.30.
0.001	6 2 6	6 4 6	n = 6. mean = 5.00. std dev = 1.67. CV = 0.335.
0.002	5 7 7	7 3 4	n = 6. mean = 5.50. std dev = 1.76. CV =0 .320.
0.005	7 8 8	7 8 6	n = 6. mean = 7.33. std dev = 0.817. CV = 0.111.
0.010	10 10 10	9 13 10	n = 6. mean = 10.3. std dev = 1.37. CV = 0.133.
0.020	20 20 20	23 22 20	n = 6. mean = 20.8. std dev = 1.33. CV = 0.064.
0.050	42 42 42	42 42 45	n = 6. mean = 42.5. std dev = 1.22. CV = 0.029.
0.10		84 80 83	n = 3. mean = 82.3. std dev = 2.08. CV = 0.025.

Table 2--Cd Standard Working Range Study [Flame AAS Analysis]			
STD (µg/mL)	Absorbance reading at 228.8 nm		Statistical analysis
Reagent blank	5 4 4	2 3 3	n = 6. mean = 3.50. std dev = 1.05. CV = 0.30.
0.020	20 20 20	23 22 20	n = 6. mean = 20.8. std dev = 1.33. CV = 0.064.
0.050	42 42 42	42 42 45	n = 6. mean = 42.5. std dev = 1.22. CV = 0.029.
0.10		84 80 83	n = 3. mean = 82.3. std dev = 2.08. CV = 0.025.
0.20		161 161 158	n = 3. mean = 160.0. std dev = 1.73. CV = 0.011.
0.50		391 389 393	n = 3. mean = 391.0. std dev = 2.00. CV = 0.005.
1.00		760 748 752	n = 3. mean = 753.3. std dev = 6.11. CV = 0.008.
2.00		1416 1426 1401	n = 3. mean = 1414.3. std dev = 12.6. CV = 0.009.

Table 3--Cd Detection Limit Study [AAS-HGA Analysis]

STD (ng/mL)	Peak area Readings x 10^3 at 228.8 nm		Statistical analysis
Reagent blank	0 0 0	0 1 0	n = 6. mean = 0.167. std dev = 0.41. CV = 2.45.
0.1	8 5 13	6 7 7	n = 6. mean = 7.7. std dev = 2.8. CV = 0.366.
0.2	11 11 12	13 12 12	n = 6. mean = 11.8. std dev = 0.75. CV = 0.064.
0.5	28 26 28	33 28 30	n = 6. mean = 28.8. std dev = 2.4. CV = 0.083.
1.0	52 56 54	55 58 54	n = 6. mean = 54.8. std dev = 2.0. CV = 0.037.
2.0	101 110 110	112 110 110	n = 6. mean = 108.8. std dev = 3.9. CV = 0.036.

Table 4--Cd Standard Working Range Study [AAS-HGA Analysis]

STD (ng/mL)	Peak area Readings x 10^3 at 228.8 nm		Statistical analysis
0.2	11 11 12	13 12 12	n = 6. mean = 11.8. std dev = 0.75. CV = 0.064.
0.5	28 26 28	33 28 30	n = 6. mean = 28.8. std dev = 2.4. CV = 0.083.
1.0	52 56 54	55 58 54	n = 6. mean = 54.8. std dev = 2.0. CV = 0.037.
2.0	101 110 110	112 110 110	n = 6. mean = 108.8. std dev = 3.9. CV = 0.036.
5.0	247 268 259	265 275 279	n = 6. mean = 265.5. std dev = 11.5. CV = 0.044.
10.0	495 523 516	520 513 533	n = 6. mean = 516.7. std dev = 12.7. CV = 0.025.

Table 4--Cd Standard Working Range Study [AAS-HGA Analysis]			
STD (ng/mL)	Peak area Readings x 10^3 at 228.8 nm		Statistical analysis
20.0	950 951 949	953 958 890	n = 6. mean = 941.8. std dev = 25.6. CV = 0.027.
30.0	1269 1303 1295	1291 1307 1290	n = 6. mean = 1293. std dev = 13.3. CV = 0.010.
40.0	1505 1535 1566	1567 1567 1572	n = 6. mean = 1552. std dev = 26.6. CV = 0.017.

Table 5--Analytical Method Recovery [Flame AAS Analysis]Test Level								
µg taken	**0.5x µg found**	**Percent rec.**	**µg taken**	**1.0x µg found**	**Percent rec.**	**µg taken**	**2.0x µg found**	**Percent rec.**
1.00	1.0715	107.2	2.00	2.0688	103.4		4.1504	103.8
1.00	1.0842	108.4	2.00	2.0174	100.9	4.00	4.1108	102.8
1.00	1.0842	108.4	2.00	2.0431	102.2	4.00	4.0581	101.5
1.00	*1.0081	*100.8	2.00	2.0431	102.2	4.00	4.0844	102.1
1.00	1.0715	107.2	2.00	2.0174	100.9	4.00	4.1504	103.8
1.00		108.4	2.00	2.0045	100.2	4.00	4.1899	104.7
						4.00		
n =	5			6			6	
mean =	107.9			101.6			103.1	
std dev =	0.657			1.174			1.199	
CV_1 =	0.006			0.011			0.012	
				CV_1 (pooled) = 0.010				

*Rejected as an outlier-this value did not pass the outlier T-test at the 99% confidence level.

Test Level 0.1x		
µg taken	**µg found**	**Percent rec.**
0.200	0.2509	125.5
0.200	0.2509	125.5
0.200	0.2761	138.1
0.200	0.2258	112.9
0.200	0.2258	112.9
0.200	0.1881	94.1

n = 6
mean = 118.2
std dev = 15.1
CV_1 = 0.128

Table 6-Analytical Method Recovery [AAS-HGA analysis] Test Level								
ng taken	**0.5x ng found**	**Percent rec.**	**ng taken**	**1.0x ng found**	**Percent rec.**	**ng taken**	**2.0x ng found**	**Percent rec.**
75	71.23	95.0	150	138.00	92.0	300	258.43	86.1
75	71.47	95.3	150	138.29	92.2	300	258.46	86.2
75	70.02	93.4	150	136.30	90.9	300	280.55	93.5
75	77.34	103.1	150	146.62	97.7	300	288.34	96.1
75	78.32	104.4	150	145.17	96.8	300	261.74	87.2
75	71.96	95.9.	150	144.88	96.6	300	277.22	92.4

n =	6	6	6
mean =	97.9	94.4	90.3
std dev =	4.66	2.98	4.30
CV_1 =	0.048	0.032	0.048

CV_1 (pooled) = 0.043

(6) **Instrumental Parameters for Flame AAS Analysis**.

Atomic Absorption Spectrophotometer
(Perkin-Elmer Model 603)
Flame: Air/Acetylene--lean, blue
Oxidant Flow: 55
Fuel Flow: 32
Wavelength: 228.8 nm
Slit: 4 (0.7 nm)
Range: UV
Signal: Concentration (4 exp)
Integration Time: 3 sec

(7) **Instrumental Parameters for HGA Analysis**.

Atomic Absorption Spectrophotometer
(Perkin-Elmer Model 5100)
Signal Type: Zeeman AA
Slitwidth: 0.7 nm
Wavelength: 228.8 nm
Measurement: Peak Area
Integration Time: 6.0 sec
BOC Time: 5 sec BOC = Background Offset
Correction. Zeeman Graphite Furnace
(Perkin-Elmer Model HGA-600)

	Ramp Time (sec)	*Hold Time (sec)*	*Temp (°C)*	*Argon Flow (mL/min)*	*Read (sec)*
1) Predry	5	10	90	300	--
2) Dry	30	10	140	300	--
3) Char	10	20	900	300	--
4) Cool Down	1	8	30	300	--
5) Atomize	0	5	1600	0	-1
6) Burnout	1	8	2500	300	--

WAC 296-62-07451 A short description of Appendix F to 29 CFR 1910.1027--Nonmandatory protocol for biological monitoring.

Appendix F is not included in this standard due to limited employer/employee application. The following is a brief synopsis of the content of Appendix F to 29 CFR 1910.1027, Cadmium.

(1) The medical monitoring program for cadmium requires that blood and urine samples must be collected at defined intervals from workers by physicians responsible for medical monitoring. These samples are sent to commercial laboratories that perform the required analyses and report results of these analyses to the responsible physicians. To ensure the accuracy and reliability of these laboratory analyses, the laboratories to which samples are submitted should participate in an ongoing and efficacious proficiency testing program.

(2) This nonmandatory protocol is intended to provide guidelines and recommendations for physicians and laboratories to improve the accuracy and reliability of the procedures used to analyze the biological samples collected as part of the medical monitoring program for cadmium. This protocol provides procedures for characterizing and maintaining the quality of analytic results derived from the analyses of cadmium in blood (CDB), cadmium in urine (CDU), and beta-2-microglobulin in urine (B2MU) by commercial laboratories. Laboratories conforming to the provisions of this nonmandatory protocol shall be known as "participating laboratories."

(3) This protocol describes procedures that may be used by the responsible physicians to identify laboratories most likely to be proficient in the analysis of samples used in the biological monitoring of cadmium. It also provides procedures for record keeping and reporting by laboratories participating in proficiency testing programs, and recommendations to assist these physicians in interpreting analytical results determined by participating laboratories.

(4) For those needing Appendix F, 29 CFR 1910.1027, in its entirety, a copy may be obtained by request to:

Department of Labor and Industries
Division of Industrial Safety and Health
Standards and Information
Post Office Box 44620
Olympia, Washington 98504-4620
or telephone (360) 956-5527

WAC 296-62-07460 1,3-Butadiene.

(1) **Scope and application**.

(a) This section applies to all occupational exposures to 1,3-Butadiene (BD), Chemical Abstracts Service Registry No. 106-99-0, except as provided in (b) of this subsection.

(b)

(i) Except for the recordkeeping provisions in subsection (13)(a) of this section, this section does not apply to the processing, use, or handling of products containing BD or to other work operations and streams in which BD is present where objective data are reasonably relied upon that demonstrate the work operation or the product or the group of products or operations to which it belongs may not reasonably be foreseen to release BD in airborne concentrations at or above the action level or in excess of the STEL under the expected conditions of processing, use, or handling that will cause the greatest possible release or in any plausible accident.

(ii) This section also does not apply to work operations, products or streams where the only exposure to BD is from liquid mixtures containing 0.1% or less of BD by volume or the vapors released from such liquids, unless objective data become available that show that airborne concentrations generated by such mixtures can exceed the action level or STEL under reasonably predictable conditions of processing, use or handling that will cause the greatest possible release.

(iii) Except for labeling requirements and requirements for emergency response, this section does not apply to the storage, transportation, distribution or sale of BD or liquid mixtures in intact containers or in transportation pipelines sealed in such a manner as to fully contain BD vapors or liquids.

(c) Where products or processes containing BD are exempted under (b) of this subsection, the employer must maintain records of the objective data supporting that exemption and the basis for the employer's reliance on the data, as provided in subsection (13)(a) of this section.

(2) **Definitions: For the purpose of this section, the following definitions shall apply**:

Action level. A concentration of airborne BD of 0.5 ppm calculated as an 8-hour time-weighted average.

Authorized person. Any person specifically designated by the employer, whose duties require entrance into a regulated area, or a person entering such an area as a designated representative of employees to exercise the right to observe monitoring and measuring procedures under subsection (4)(h) of this section, or a person designated under the WISH Act or regulations issued under the WISH Act to enter a regulated area.

1,3-Butadiene. An organic compound with chemical formula $CH_2 = CHCH = CH_2$ that has a molecular weight of approximately 54.15 gm/mole.

Business day. Any Monday through Friday, except those days designated as federal, state, local or company specific holidays.

Complete blood count (CBC). Laboratory tests performed on whole blood specimens and includes the following: White blood cell count (WBC), hematocrit (Hct), red blood cell count (RBC), hemoglobin (Hgb), differential count of white blood cells, red blood cell morphology, red blood cell indices, and platelet count.

Day. Any part of a calendar day.

Director. The director of the department of labor and industries, or authorized representatives.

Emergency situation. Any occurrence such as, but not limited to, equipment failure, rupture of containers, or failure of control equipment that may or does result in an uncontrolled significant release of BD.

Employee exposure. Exposure of a worker to airborne concentrations of BD which would occur if the employee were not using respiratory protective equipment.

Objective data. Monitoring data, or mathematical modelling or calculations based on composition, chemical and physical properties of a material, stream or product.

Permissible exposure limits (PELs). Either the 8-hour time-weighted average (8-hr TWA) exposure or the short-term exposure limit (STEL).

Physician or other licensed health care professional. An individual whose legally permitted scope of practice (i.e., license, registration, or certification) allows them to independently provide or be delegated the responsibility to provide one or more of the specific health care services required by (k) of this subsection.

Regulated area. Any area where airborne concentrations of BD exceed or can reasonably be expected to exceed the 8-hour time-weighted average (8-hr TWA) exposure of 1 ppm or the short-term exposure limit (STEL) of 5 ppm for 15 minutes.

This section. This 1,3-butadiene standard.

(3) **Permissible exposure limits (PELs)**.

(a) Time-weighted average (TWA) limit. The employer must ensure that no employee is exposed to an airborne concentration of BD in excess of one part BD per million parts of air (ppm) measured as an eight (8)-hour time-weighted average.

(b) Short-term exposure limit (STEL). The employer must ensure that no employee is exposed to an airborne concentration of BD in excess of five parts of BD per million parts of air (5 ppm) as determined over a sampling period of fifteen minutes.

(4) **Exposure monitoring**.

(a) General.

(i) Determinations of employee exposure must be made from breathing zone air samples that are representative of the 8-hour TWA and 15-minute short-term exposures of each employee.

(ii) Representative 8-hour TWA employee exposure must be determined on the basis of one or more samples representing full-shift exposure for each shift and for each job classification in each work area.

(iii) Representative 15-minute short-term employee exposures must be determined on the basis of one or more samples representing 15-minute exposures associated with operations that are most likely to produce exposures above the STEL for each shift and for each job classification in each work area.

(iv) Except for the initial monitoring required under (b) of this subsection, where the employer can document that exposure levels are equivalent for similar operations on different work shifts, the employer need only determine representative employee exposure for that operation from the shift during which the highest exposure is expected.

(b) Initial monitoring.

(i) Each employer who has a workplace or work operation covered by this section, must perform initial monitoring to determine accurately the airborne concentrations of BD to which employees may be exposed, or must rely on objective data pursuant to subsection (1)(b)(i) of this section to fulfill this requirement. The initial monitoring required under this subitem must be completed within 60 days of the introduction of BD into the workplace.

(ii) Where the employer has monitored within two years prior to the effective date of this section and the monitoring satisfies all other requirements of this section, the employer may rely on such earlier monitoring results to satisfy the requirements of (b)(i) of this subsection, provided that the conditions under which the initial monitoring was conducted have not changed in a manner that may result in new or additional exposures.

(c) Periodic monitoring and its frequency.

(i) If the initial monitoring required by (b) of this subsection reveals employee exposure to be at or above the action level but at or below both the 8-hour TWA limit and the STEL, the employer must repeat the representative monitoring required by (a) of this subsection every twelve months.

(ii) If the initial monitoring required by (b) of this subsection reveals employee exposure to be above the 8-hour TWA limit, the employer must repeat the representative monitoring required by (a)(ii) of this subsection at least every three months until the employer has collected two samples per quarter (each at least 7 days apart) within a two-year period, after which such monitoring must occur at least every six months.

(iii) If the initial monitoring required by (b) of this subsection reveals employee exposure to be above the STEL, the employer must repeat the representative monitoring required by (a)(iii) of this subsection at least every three months until the employer has collected two samples per quarter (each at least 7 days apart) within a two-year period, after which such monitoring must occur at least every six months.

(iv) The employer may alter the monitoring schedule from every six months to annually for any required representative monitoring for which two consecutive measurements taken at least 7 days apart indicate that employee exposure has decreased to or below the 8-hour TWA, but is at or above the action level.

(d) Termination of monitoring.

(i) If the initial monitoring required by (b) of this subsection reveals employee exposure to be below the action level and at or below the STEL, the employer may discontinue the monitoring for employees whose exposures are represented by the initial monitoring.

(ii) If the periodic monitoring required by (c) of this subsection reveals that employee exposures, as indicated by at least two consecutive measurements taken at least 7 days apart, are below the action level and at or below the STEL, the employer may discontinue the monitoring for those employees who are represented by such monitoring.

(e) Additional monitoring.

(i) The employer must institute the exposure monitoring required under subsection (4) of this section whenever there has been a change in the production, process, control equipment, personnel or work-practices that may result in new or additional exposures to BD or when the employer has any reason to suspect that a change may result in new or additional exposures.

(ii) Whenever spills, leaks, ruptures or other breakdowns occur that may lead to employee exposure above the 8-hr TWA limit or above the STEL, the employer must monitor (using leak source, such as direct reading instruments, area or personal monitoring), after the cleanup of the spill or repair of the leak, rupture or other breakdown, to ensure that exposures have returned to the level that existed prior to the incident.

(f) Accuracy of monitoring.

Monitoring must be accurate, at a confidence level of 95 percent, to within plus or minus 25 percent for airborne concentrations of BD at or above the 1 ppm TWA limit and to within plus or minus 35 percent for airborne concentrations of BD at or above the action level of 0.5 ppm and below the 1 ppm TWA limit.

(g) Employee notification of monitoring results.

(i) The employer must, within 5 business days after the receipt of the results of any monitoring performed under this section, notify the affected employees of these results in writing either individually or by posting of results in an appropriate location that is accessible to affected employees.

(ii) The employer must, within 15 business days after receipt of any monitoring performed under this section indicating the 8-hour TWA or STEL has been exceeded, provide the affected employees, in writing, with information on the corrective action being taken by the employer to reduce employee exposure to or below the 8-hour TWA or STEL and the schedule for completion of this action.

(h) Observation of monitoring.

(i) Employee observation. The employer must provide affected employees or their designated representatives an opportunity to observe any monitoring of employee exposure to BD conducted in accordance with this section.

(ii) Observation procedures. When observation of the monitoring of employee exposure to BD requires entry into an area where the use of protective clothing or equipment is required, the employer must provide the observer at no cost with protective clothing and equipment, and must ensure that the observer uses this equipment and complies with all other applicable safety and health procedures.

(5) **Regulated areas**.

(a) The employer must establish a regulated area wherever occupational exposures to airborne concentrations of BD exceed or can reasonably be expected to exceed the permissible exposure limits, either the 8-hr TWA or the STEL.

(b) Access to regulated areas must be limited to authorized persons.

(c) Regulated areas must be demarcated from the rest of the workplace in any manner that minimizes the number of employees exposed to BD within the regulated area.

(d) An employer at a multi-employer worksite who establishes a regulated area must communicate the access restrictions and locations of these areas to other employers with work operations at that worksite whose employees may have access to these areas.

(6) **Methods of compliance**.

(a) Engineering controls and work-practices.

(i) The employer must institute engineering controls and work-practices to reduce and maintain employee exposure to or below the PELs, except to the extent that the employer can establish that these controls are not feasible or where subsection (8)(a)(i) of this section applies.

(ii) Wherever the feasible engineering controls and work-practices which can be instituted are not sufficient to reduce employee exposure to or below the 8-hour TWA or STEL, the employer must use them to reduce employee exposure to the lowest levels achievable by these controls and must supplement them by the use of respiratory protection that complies with the requirements of subsection (8) of this section.

(b) Compliance plan.

(i) Where any exposures are over the PELs, the employer must establish and implement a written plan to reduce employee exposure to or below the PELs primarily by means of engineering and work-practice controls, as required by (a) of this subsection, and by the use of respiratory protection where required or permitted under this section. No compliance plan is required if all exposures are under the PELs.

(ii) The written compliance plan must include a schedule for the development and implementation of the engineering controls and work-practice controls including periodic leak detection surveys.

(iii) Copies of the compliance plan required in (b) of this subsection must be furnished upon request for examination and copying to the director, affected employees and designated employee representatives. Such plans must be reviewed at least every 12 months, and must be updated as necessary to reflect significant changes in the status of the employer's compliance program.

(iv) The employer must not implement a schedule of employee rotation as a means of compliance with the PELs.

(7) **Exposure goal program**.

(a) For those operations and job classifications where employee exposures are greater than the action level, in addition to compliance with the PELs, the employer must have an exposure goal program that is intended to limit employee exposures to below the action level during normal operations.

(b) Written plans for the exposure goal program must be furnished upon request for examination and copying to the director, affected employees and designated employee representatives.

(c) Such plans must be updated as necessary to reflect significant changes in the status of the exposure goal program.

(d) Respirator use is not required in the exposure goal program.

(e) The exposure goal program must include the following items unless the employer can demonstrate that the item is not feasible, will have no significant effect in reducing employee exposures, or is not necessary to achieve exposures below the action level:

(i) A leak prevention, detection, and repair program.

(ii) A program for maintaining the effectiveness of local exhaust ventilation systems.

(iii) The use of pump exposure control technology such as, but not limited to, mechanical double-sealed or seal-less pumps.

(iv) Gauging devices designed to limit employee exposure, such as magnetic gauges on rail cars.

(v) Unloading devices designed to limit employee exposure, such as a vapor return system.

(vi) A program to maintain BD concentration below the action level in control rooms by use of engineering controls.

(8) **Respiratory protection**.

(a) General. For employees who use respirators required by this section, the employer must provide each employee an appropriate respirator that complies with the requirements of this subsection. Respirators must be used during:

(i) Periods necessary to install or implement feasible engineering and work-practice controls;

(ii) Nonroutine work operations that are performed infrequently and for which exposures are limited in duration;

(iii) Work operations for which feasible engineering controls and work-practice controls are not yet sufficient to reduce employee exposures to or below the PELs;

(iv) Emergencies.

(b) Respirator program.

(i) The employer must implement a respiratory protection program as required by chapter 296-842 WAC, except 296-842-13005 and 296-842-14005, which covers each employee required by this section to use a respirator.

(ii) If air-purifying respirators are used, the employer must replace the air-purifying filter elements according to the replacement schedule set for the class of respirators listed in Table 1 of this section, and at the beginning of each work shift.

(iii) Instead of using the replacement schedule listed in Table 1 of this section, the employer may replace cartridges or canisters at 90% of their expiration service life, provided the employer:

(A) Demonstrates that employees will be adequately protected by this procedure;

(B) Uses BD breakthrough data for this purpose that have been derived from tests conducted under worst-case conditions of humidity, temperature, and air-flow rate through the filter element, and the employer also describes the data supporting the cartridge-or canister-change schedule, as well as the basis for using the data in the employer's respirator program.

(iv) A label must be attached to each filter element to indicate the date and time it is first installed on the respirator.

(v) If NIOSH approves and end-of-service-life indicator (ESLI) for an air-purifying filter element, the element may be used until the ESLI shows no further useful service life or until the element is replaced at the beginning of the next work shift, whichever occurs first.

(vi) Regardless of the air-purifying element used, if an employee detects the odor of BD, the employer must replace the air-purifying element immediately.

(c) Respirator selection.

(i) The employer must select appropriate respirators from Table 1 of this section.

Table 1. - Minimum Requirements for Respiratory Protection for Airborne BD

Concentration of Airborne BD (ppm) or condition of use	Minimum required respirator
Less than or equal to 5 ppm(5 times PEL)	(a) Air-purifying half-mask or full facepiece respirator equipped with approved BD or organic vapor cartridges or canisters. Cartridges or canisters shall be replaced every 4 hours.
Less than or equal to 10 ppm (10 times PEL)	(a) Air-purifying half-mask or full facepiece respirator equipped with approved BD or organic vapor cartridges or canisters. Cartridges or canisters shall be replaced every 3 hours.
Less than or equal to 25 ppm(25 times PEL)	(a) Air-purifying full facepiece respirator equipped with approved BD or organic vapor cartridges or canisters. Cartridges or canisters shall be replaced every 2 hours. (b) Any powered air-purifying respirator equipped with approved BD or organic vapor cartridges. PAPR cartridges shall be replaced every 2 hours.
	(c) Continuous-flow supplied air respirator equipped with a hood or helmet.
Less than or equal to 50 ppm(50 times PEL)	(a) Air-purifying full facepiece respirator equipped with approved BD or organic vapor cartridges or canisters Cartridges or canisters shall be replaced every 1 hour. (b) Powered air purifying respirator equipped with a tight-fitting facepiece and an approved BD or organic vapor cartridges. PAPR cartridges shall be replaced every 1 hour.
Less than or equal to 1,000 ppm (1,000 times PEL)	(a) Supplied air respirator equipped with a half mask or full facepiece and operated in pressure-demand mode or other positive-pressure mode.

Table 1. - Minimum Requirements for Respiratory Protection for Airborne BD	
Concentration of Airborne BD (ppm) or condition of use	**Minimum required respirator**
Greater than 1,000 ppm	(a) Self- contained breathing unknown concentration, or apparatus equipped with a fire fighting full facepiece and operated in a pressure-demand or other positive pressure mode. (b) Any supplied air respirator equipped with a full facepiece and operated in a pressure-demand or other positive-pressure mode in combination with an auxiliary self-contained breathing apparatus operated in a pressure-demand or other positive pressure mode.
Escape from IDLH Conditions	(a) Any positive-pressure self-contained breathing apparatus with an appropriate service life. (b) Any air-purifying full facepiece respirator equipped with a front or back mounted BD or organic vapor canister.

Notes: Respirators approved for use in higher concentrations are permitted to be used in lower concentrations. Full facepiece is required when eye irritation is anticipated.

(ii) Air-purifying respirators must have filter elements certified by NIOSH for organic vapor or BD.

(iii) When an employee whose job requires the use of a respirator cannot use a negative-pressure respirator, the employer must provide the employee with a respirator that has less breathing resistance than the negative-pressure respirator, such as a powered air-purifying respirator or supplied-air respirator, when the employee is able to use it and if it provides the employee adequate protection.

(9) **Protective clothing and equipment**. Where appropriate to prevent eye contact and limit dermal exposure to BD, the employer must provide protective clothing and equipment at no cost to the employee and must ensure its use. Eye and face protection must meet the requirements of WAC 296-800-160.

(10) **Emergency situations**. Written plan. A written plan for emergency situations must be developed, or an existing plan must be modified, to contain the applicable elements specified in WAC 296-24-567, Employee emergency plans and fire prevention plans, and in chapter 296-843 WAC, hazardous waste operations and emergency responses, for each workplace where there is a possibility of an emergency.

(11) **Medical screening and surveillance**.

(a) Employees covered. The employer must institute a medical screening and surveillance program as specified in this subsection for:

(i) Each employee with exposure to BD at concentrations at or above the action level on 30 or more days or for employees who have or may have exposure to BD at or above the PELs on 10 or more days a year;

(ii) Employers (including successor owners) must continue to provide medical screening and surveillance for employees, even after transfer to a non-BD exposed job and regardless of when the employee is transferred, whose work histories suggest exposure to BD:

(A) At or above the PELs on 30 or more days a year for 10 or more years;

(B) At or above the action level on 60 or more days a year for 10 or more years; or

(C) Above 10 ppm on 30 or more days in any past year; and

(iii) Each employee exposed to BD following an emergency situation.

(b) Program administration.

(i) The employer must ensure that the health questionnaire, physical examination and medical procedures are provided without cost to the employee, without loss of pay, and at a reasonable time and place.

(ii) Physical examinations, health questionnaires, and medical procedures must be performed or administered by a physician or other licensed health care professional.

(iii) Laboratory tests must be conducted by an accredited laboratory.

(c) Frequency of medical screening activities. The employer must make medical screening available on the following schedule:

(i) For each employee covered under (a)(i) and (ii) of this subsection, a health questionnaire and complete blood count (CBC) with differential and platelet count every year, and a physical examination as specified below:

(A) An initial physical examination that meets the requirements of this rule, if twelve months or more have elapsed since the last physical examination conducted as part of a medical screening program for BD exposure;

(B) Before assumption of duties by the employee in a job with BD exposure;

(C) Every 3 years after the initial physical examination;

(D) At the discretion of the physician or other licensed health care professional reviewing the annual health questionnaire and CBC;

(E) At the time of employee reassignment to an area where exposure to BD is below the action level, if the employee's past exposure history does not meet the criteria of (a)(ii) of this subsection for continued coverage in the screening and surveillance program, and if twelve months or more have elapsed since the last physical examination; and

(F) At termination of employment if twelve months or more have elapsed since the last physical examination.

(ii) Following an emergency situation, medical screening must be conducted as quickly as possible, but not later than 48 hours after the exposure.

(iii) For each employee who must wear a respirator, physical ability to perform the work and use the respirator must be determined as required by chapter 296-842 WAC.

(d) Content of medical screening.

(i) Medical screening for employees covered by (a)(i) and (ii) of this subsection must include:

(A) A baseline health questionnaire that includes a comprehensive occupational and health history and is updated annually. Particular emphasis must be placed on the hematopoietic and reticuloendothelial systems, including exposure to chemicals, in addition to BD, that may have an adverse effect on these systems, the presence of signs and symptoms that might be related to disorders of these systems, and any other information determined by the examining physician or other licensed health care professional to be necessary to evaluate whether the employee is at increased risk of material impairment of health from BD exposure. Health questionnaires must consist of the sample forms in Appendix C to this section, or be equivalent to those samples;

(B) A complete physical examination, with special emphasis on the liver, spleen, lymph nodes, and skin;

(C) A CBC; and

(D) Any other test which the examining physician or other licensed health care professional deems necessary to evaluate whether the employee may be at increased risk from exposure to BD.

(ii) Medical screening for employees exposed to BD in an emergency situation must focus on the acute effects of BD exposure and at a minimum include: A CBC within 48 hours of the exposure and then monthly for three months; and a physical examination if the employee reports irritation of the eyes, nose, throat, lungs, or skin, blurred vision, coughing, drowsiness, nausea, or headache. Continued employee participation in the medical screening and surveillance program, beyond these minimum requirements, shall be at the discretion of the physician or other licensed health care professional.

(e) Additional medical evaluations and referrals.

(i) Where the results of medical screening indicate abnormalities of the hematopoietic or reticuloendothelial systems, for which a nonoccupational cause is not readily apparent, the examining physician or other licensed health care professional must refer the employee to an appropriate specialist for further evaluation and must make available to the specialist the results of the medical screening.

(ii) The specialist to whom the employee is referred under this subsection must determine the appropriate content for the medical evaluation, e.g., examinations, diagnostic tests and procedures, etc.

(f) Information provided to the physician or other licensed health care professional. The employer must provide the following information to the examining physician or other licensed health care professional involved in the evaluation:

(i) A copy of this section including its appendices;

(ii) A description of the affected employee's duties as they relate to the employee's BD exposure;

(iii) The employee's actual or representative BD exposure level during employment tenure, including exposure incurred in an emergency situation;

(iv) A description of pertinent personal protective equipment used or to be used; and

(v) Information, when available, from previous employment-related medical evaluations of the affected employee which is not otherwise available to the physician or other licensed health care professional or the specialist.

(g) The written medical opinion.

(i) For each medical evaluation required by this section, the employer must ensure that the physician or other licensed health care professional produces a written opinion and provides a copy to the employer and the employee within 15 business days of the evaluation. The written opinion must be limited to the following information:

(A) The occupationally pertinent results of the medical evaluation;

(B) A medical opinion concerning whether the employee has any detected medical conditions which would place the employee's health at increased risk of material impairment from exposure to BD;

(C) Any recommended limitations upon the employee's exposure to BD; and

(D) A statement that the employee has been informed of the results of the medical evaluation and any medical conditions resulting from BD exposure that require further explanation or treatment.

(ii) The written medical opinion provided to the employer must not reveal specific records, findings, and diagnoses that have no bearing on the employee's ability to work with BD.

Note: This provision does not negate the ethical obligation of the physician or other licensed health care professional to transmit any other adverse findings directly to the employer.

(h) Medical surveillance.

(i) The employer must ensure that information obtained from the medical screening program activities is aggregated (with all personal identifiers removed) and periodically reviewed, to ascertain whether the health of the employee population of that employer is adversely affected by exposure to BD.

(ii) Information learned from medical surveillance activities must be disseminated to covered employees, as defined in (a) of this subsection, in a manner that ensures the confidentiality of individual medical information.

(12) **Communication of BD hazards**.

(a) Hazard communication-General.

(i) Chemical manufacturers, importers, distributors and employers must comply with all requirements of the Hazard Communication Standard (HCS), WAC 296-901-140 for BD.

(ii) In classifying the hazards of BD at least the following hazards are to be addressed: Cancer; eye and respiratory tract irritation; central nervous system effects; and flammability.

(iii) Employers must include BD in the hazard communication program established to comply with the HCS, WAC 296-901-140. Employers must ensure that each employee has access to labels on containers of BD and to safety data sheets, and is trained in accordance with the requirements of the HCS and (b) of this subsection.

(b) Employee information and training.

(i) The employer must train each employee who is potentially exposed to BD at or above the action level or the STEL in accordance with the requirements of WAC 296-901-140 Hazard communication.

(ii) The employer must institute a training program for all employees who are potentially exposed to BD at or above the action level or the STEL, ensure employee participation in the program and maintain a record of the contents of such program.

(iii) Training must be provided prior to or at the time of initial assignment to a job potentially involving exposure to BD at or above the action level or STEL and at least annually thereafter.

(iv) The training program must be conducted in a manner that the employee is able to understand. The employer must ensure that each employee exposed to BD over the action level or STEL is informed of the following:

(A) The health hazards associated with BD exposure, and the purpose and a description of the medical screening and surveillance program required by this section;

(B) The quantity, location, manner of use, release, and storage of BD and the specific operations that could result in exposure to BD, especially exposures above the PEL or STEL;

(C) The engineering controls and work-practices associated with the employee's job assignment, and emergency procedures and personal protective equipment;

(D) The measures employees can take to protect themselves from exposure to BD;

(E) The contents of this standard and its appendices; and

(F) The right of each employee exposed to BD at or above the action level or STEL to obtain:

(I) Medical examinations as required by subsection (10) of this section at no cost to the employee;

(II) The employee's medical records required to be maintained by subsection (13)(c) of this section; and

(III) All air monitoring results representing the employee's exposure to BD and required to be kept by subsection (13)(b) of this section.

(c) Access to information and training materials.

(i) The employer must make a copy of this standard and its appendices readily available without cost to all affected employees and their designated representatives and must provide a copy if requested.

(ii) The employer must provide to the director, or the designated employee representatives, upon request, all materials relating to the employee information and the training program.

(13) **Recordkeeping**.

(a) Objective data for exemption from initial monitoring.

(i) Where the processing, use, or handling of products or streams made from or containing BD are exempted from other requirements of this section under subsection (1)(b) of this section, or where objective data have been relied on in lieu of initial monitoring under subsection (4)(b)(ii) of this section, the employer must establish and maintain a record of the objective data reasonably relied upon in support of the exemption.

(ii) This record must include at least the following information:

(A) The product or activity qualifying for exemption;

(B) The source of the objective data;

(C) The testing protocol, results of testing, and analysis of the material for the release of BD;

(D) A description of the operation exempted and how the data support the exemption; and

(E) Other data relevant to the operations, materials, processing, or employee exposures covered by the exemption.

(iii) The employer must maintain this record for the duration of the employer's reliance upon such objective data.

(b) Exposure measurements.

(i) The employer must establish and maintain an accurate record of all measurements taken to monitor employee exposure to BD as prescribed in subsection (4) of this section.

(ii) The record must include at least the following information:

(A) The date of measurement;

(B) The operation involving exposure to BD which is being monitored;

(C) Sampling and analytical methods used and evidence of their accuracy;

(D) Number, duration, and results of samples taken;

(E) Type of protective devices worn, if any;

(F) Name, Social Security number and exposure of the employees whose exposures are represented; and

(G) The written corrective action and the schedule for completion of this action required by subsection (4)(g)(ii) of this section.

(iii) The employer must maintain this record for at least 30 years in accordance with chapter 296-802 WAC.

(c) Medical screening and surveillance.

(i) The employer must establish and maintain an accurate record for each employee subject to medical screening and surveillance under this section.

(ii) The record must include at least the following information:

(A) The name and Social Security number of the employee;

(B) Physician's or other licensed health care professional's written opinions as described in subsection (11)(e) of this section;

(C) A copy of the information provided to the physician or other licensed health care professional as required by subsections (11)(e) of this section.

(iii) Medical screening and surveillance records must be maintained for each employee for the duration of employment plus 30 years, in accordance with chapter 296-802 WAC.

(d) Availability.

(i) The employer, upon written request, must make all records required to be maintained by this section available for examination and copying to the director.

(ii) Access to records required to be maintained by (a) and (b) of this subsection must be granted in accordance with chapter 296-802 WAC.

(e) Transfer of records. The employer must transfer medical and exposure records as set forth in WAC 296-802-60005.

(14) **Start-up dates**.

(a) The initial monitoring required under subsection (4)(b) of this section must be completed immediately or within sixty days of the introduction of BD into the workplace.

(b) The requirements of subsections (3) through (13) of this section, including feasible work-practice controls but not including engineering controls specified in subsection (6)(a) of this section, must be complied with immediately.

(15) **Appendices**. Appendices A, B, C, D, and F to this section are informational and are not intended to create any additional obligations not otherwise imposed or to detract from any existing obligations.

Appendix A. Substance Safety Data Sheet For 1,3-Butadiene (Non-Mandatory)

(1) **Substance Identification**.

(a) Substance: 1,3-Butadiene ($CH_2 = CHCH = CH_2$).

(b) Synonyms: 1,3-Butadiene (BD); butadiene; biethylene; bi-vinyl; divinyl; butadiene-1,3; buta-1,3-diene; erythrene; NCI-C50602; CAS-106-99-0.

(c) BD can be found as a gas or liquid.

(d) BD is used in production of styrene-butadiene rubber and polybutadiene rubber for the tire industry. Other uses include copolymer latexes for carpet backing and paper coating, as well as resins and polymers for pipes and automobile and appliance parts. It is also used as an intermediate in the production of such chemicals as fungicides.

(e) Appearance and odor: BD is a colorless, non-corrosive, flammable gas with a mild aromatic odor at standard ambient temperature and pressure.

(f) Permissible exposure: Exposure may not exceed 1 part BD per million parts of air averaged over the 8-hour workday, nor may short-term exposure exceed 5 parts of BD per million parts of air averaged over any 15-minute period in the 8-hour workday.

(2) **Health Hazard Data**.

(a) BD can affect the body if the gas is inhaled or if the liquid form, which is very cold (cryogenic), comes in contact with the eyes or skin.

(b) Effects of overexposure: Breathing very high levels of BD for a short time can cause central nervous system effects, blurred vision, nausea, fatigue, headache, decreased blood pressure and pulse rate, and unconsciousness. There are no recorded cases of accidental exposures at high levels that have caused death in humans, but this could occur. Breathing lower levels of BD may cause irritation of the eyes, nose, and throat. Skin contact with liquefied BD can cause irritation and frostbite.

(c) Long-term (chronic) exposure: BD has been found to be a potent carcinogen in rodents, inducing neoplastic lesions at multiple target sites in mice and rats. A recent study of BD-exposed workers showed that exposed workers have an increased risk of developing leukemia. The risk of leukemia increases with increased exposure to BD. OSHA has concluded that there is strong evidence that workplace exposure to BD poses an increased risk of death from cancers of the lymphohematopoietic system.

(d) Reporting signs and symptoms: You should inform your supervisor if you develop any of these signs or symptoms and suspect that they are caused by exposure to BD.

(3) **Emergency First Aid Procedures**.

In the event of an emergency, follow the emergency plan and procedures designated for your work area. If you have been trained in first aid procedures, provide the necessary first aid measures. If necessary, call for additional assistance from co-workers and emergency medical personnel.

(a) Eye and Skin Exposures: If there is a potential that liquefied BD can come in contact with eye or skin, face shields and skin protective equipment must be provided and used. If liquefied BD comes in contact with the eye, immediately flush the eyes with large amounts of water, occasionally lifting the lower and the upper lids. Flush repeatedly. Get medical attention immediately. Contact lenses should not be worn when working with this chemical. In the event of skin contact, which can cause frostbite, remove any contaminated clothing and flush the affected area repeatedly with large amounts of tepid water.

(b) Breathing: If a person breathes in large amounts of BD, move the exposed person to fresh air at once. If breathing has stopped, begin cardiopulmonary resuscitation (CPR) if you have been trained in this procedure. Keep the affected person warm and at rest. Get medical attention immediately.

(c) Rescue: Move the affected person from the hazardous exposure. If the exposed person has been overcome, call for help and begin emergency rescue procedures. Use extreme caution so that you do not become a casualty. Understand the plant's emergency rescue procedures and know the locations of rescue equipment before the need arises.

(4) **Respirators and Protective Clothing**.

Respirators: Good industrial hygiene practices recommend that engineering and work-practice controls be used to reduce environmental concentrations to the permissible exposure level. However, there are some exceptions where respirators may be used to control exposure. Respirators may be used when engineering and work-practice controls are not technically feasible, when such controls are in the process of being installed, or when these controls fail and need to be supplemented or during brief, non-routine, intermittent exposure. Respirators may also be used in situations involving non-routine work operations which are performed infrequently and in which exposures are limited in duration, and in emergency situations. In some instances cartridge respirator use is allowed, but only with strict time constraints. For example, at exposure below 5 ppm BD, a cartridge (or canister) respirator, either full or half face, may be used, but the cartridge must be replaced at least every 4 hours, and it must be replaced every 3 hours when the exposure is between 5 and 10 ppm.

If the use of respirators is necessary, the only respirators permitted are those that have been approved by the National Institute for Occupational Safety and Health (NIOSH). In addition to respirator selection, a complete respiratory protection program must be instituted which includes regular training, maintenance, fit testing, inspection, cleaning, and evaluation of respirators. If you can smell BD while wearing a respirator, proceed immediately to fresh air, and change cartridge (or canister) before re-entering an area where there is BD exposure. If you experience difficulty in breathing while wearing a respirator, tell your supervisor.

(a) Protective Clothing: Employees should be provided with and required to use impervious clothing, gloves, face shields (eight-inch minimum), and other appropriate protective clothing necessary to prevent the skin from becoming frozen by contact with liquefied BD (or a vessel containing liquid BD).

Employees should be provided with and required to use splash-proof safety goggles where liquefied BD may contact the eyes.

(5) **Precautions for Safe Use, Handling, and Storage**.

(a) Fire and Explosion Hazards: BD is a flammable gas and can easily form explosive mixtures in air. It has a lower explosive limit of 2%, and an upper explosive limit of 11.5%. It has an autoignition temperature of 420 deg. C (788 deg. F). Its vapor is heavier than air (vapor density, 1.9) and may travel a considerable distance to a source of ignition and flash back. Usually it contains inhibitors to prevent self-polymerization (which is accompanied by evolution of heat) and to prevent formation of explosive peroxides. At elevated temperatures, such as in fire conditions, polymerization may take place. If the polymerization takes place in a container, there is a possibility of violent rupture of the container.

(b) Hazard: Slightly toxic. Slight respiratory irritant. Direct contact of liquefied BD on skin may cause freeze burns and frostbite.

(c) Storage: Protect against physical damage to BD containers. Outside or detached storage of BD containers is preferred. Inside storage should be in a cool, dry, well-ventilated, noncombustible location, away from all possible sources of ignition. Store cylinders vertically and do not stack. Do not store with oxidizing material.

(d) Usual Shipping Containers: Liquefied BD is contained in steel pressure apparatus.

(e) Electrical Equipment: Electrical installations in Class I hazardous locations, as defined in Article 500 of the National Electrical Code, should be in accordance with Article 501 of the Code. If explosion-proof electrical equipment is necessary, it shall be suitable for use in Group B. Group D equipment may be used if such equipment is isolated in accordance with Section 501-5(a) by sealing all conduit 1/2-inch size or larger. See Venting of Deflagrations (NFPA No. 68, 1994), National Electrical Code (NFPA No. 70, 1996), Static Electricity (NFPA No. 77, 1993), Lightning Protection Systems (NFPA No. 780, 1995), and Fire Hazard Properties of Flammable Liquids, Gases and Volatile Solids (NFPA No. 325, 1994).

(f) Firefighting: Stop flow of gas. Use water to keep fire-exposed containers cool. Fire extinguishers and quick drenching facilities must be readily available, and you should know where they are and how to operate them.

(g) Spill and Leak: Persons not wearing protective equipment and clothing should be restricted from areas of spills or leaks until clean-up has been completed. If BD is spilled or leaked, the following steps should be taken:

(i) Eliminate all ignition sources.

(ii) Ventilate area of spill or leak.

(iii) If in liquid form, for small quantities, allow to evaporate in a safe manner.

(iv) Stop or control the leak if this can be done without risk. If source of leak is a cylinder and the leak cannot be stopped in place, remove the leaking cylinder to a safe place and repair the leak or allow the cylinder to empty.

(h) Disposal: This substance, when discarded or disposed of, is a hazardous waste according to Federal regulations (40 CFR part 261). It is listed as hazardous waste number D001 due to its ignitability. The transportation, storage, treatment, and disposal of this waste material must be conducted in compliance with 40 CFR parts 262, 263, 264, 268 and 270. Disposal can occur only in properly permitted facilities. Check state and local regulation of any additional requirements as these may be more restrictive than federal laws and regulation.

(i) You should not keep food, beverages, or smoking materials in areas where there is BD exposure, nor should you eat or drink in such areas.

(j) Ask your supervisor where BD is used in your work area and ask for any additional plant safety and health rules.

(6) **Medical Requirements**.

Your employer is required to offer you the opportunity to participate in a medical screening and surveillance program if you are exposed to BD at concentrations exceeding the action level (0.5 ppm BD as an 8-hour TWA) on 30 days or more a year, or at or above the 8-hr TWA (1 ppm) or STEL (5 ppm for 15 minutes) on 10 days or more a year. Exposure for any part of a day counts. If you have had exposure to BD in the past, but have been transferred to another job, you may still be eligible to participate in the medical screening and surveillance program.

The WISHA rule specifies the past exposures that would qualify you for participation in the program. These past exposure are work histories that suggest the following:

(a) That you have been exposed at or above the PELs on 30 days a year for 10 or more years;

(b) That you have been exposed at or above the action level on 60 days a year for 10 or more years; or

(c) That you have been exposed above 10 ppm on 30 days in any past year.

Additionally, if you are exposed to BD in an emergency situation, you are eligible for a medical examination within 48 hours. The basic medical screening program includes a health questionnaire, physical examination, and blood test. These medical evaluations must be offered to you at a reasonable time and place, and without cost or loss of pay.

(7) **Observation of Monitoring**.

Your employer is required to perform measurements that are representative of your exposure to BD and you or your designated representative are entitled to observe the monitoring procedure. You are entitled to observe the steps taken in the measurement procedure, and to record the results obtained. When the monitoring procedure is taking place in an area where respirators or personal protective clothing and equipment are required to be worn, you or your representative must also be provided with, and must wear, the protective clothing and equipment.

(8) **Access to Information**.

(a) Each year, your employer is required to inform you of the information contained in this appendix. In addition, your employer must instruct you in the proper work-practices for using BD, emergency procedures, and the correct use of protective equipment.

(b) Your employer is required to determine whether you are being exposed to BD. You or your representative has the right to observe employee measurements and to record the results obtained. Your employer is required to inform you of your exposure. If your employer determines that you are being overexposed, he or she is required to inform you of the actions which are being taken to reduce your exposure to within permissible exposure limits and of the schedule to implement these actions.

(c) Your employer is required to keep records of your exposures and medical examinations. These records must be kept by the employer for at least thirty (30) years.

(d) Your employer is required to release your exposure and medical records to you or your representative upon your request.

Appendix B. Substance Technical Guidelines for 1,3-Butadiene (Non-Mandatory)

(1) **Physical and Chemical Data**.

(a) Substance identification:

(i) Synonyms: 1,3-Butadiene (BD); butadiene; biethylene; bivinyl; divinyl; butadiene-1,3; buta-1,3-diene; erythrene; NCI-C50620; CAS-106-99-0.

(ii) Formula: (CH2:CHCH:CH2).

(iii) Molecular weight: 54.1.

(b) Physical data:

(i) Boiling point (760 mm Hg): -4.7 deg. C (23.5 deg. F).

(ii) Specific gravity (water = 1): 0.62 at 20 deg. C (68 deg. F).

(iii) Vapor density (air = 1 at boiling point of BD): 1.87.

(iv) Vapor pressure at 20 deg. C (68 deg. F): 910 mm Hg.

(v) Solubility in water, g/100 g water at 20 deg. C (68 deg. F): 0.05.

(vi) Appearance and odor: Colorless, flammable gas with a mildly aromatic odor. Liquefied BD is a colorless liquid with a mildly aromatic odor.

(2) **Fire, Explosion, and Reactivity Hazard Data**.

(a) Fire:

(i) Flash point: -76 deg. C (-105 deg. F) for takeout; liquefied BD; Not applicable to BD gas.

(ii) Stability: A stabilizer is added to the monomer to inhibit formation of polymer during storage. Forms explosive peroxides in air in absence of inhibitor.

(iii) Flammable limits in air, percent by volume: Lower: 2.0; Upper: 11.5.

(iv) Extinguishing media: Carbon dioxide for small fires, polymer or alcohol foams for large fires.

(v) Special firefighting procedures: Fight fire from protected location or maximum possible distance. Stop flow of gas before extinguishing fire. Use water spray to keep fire-exposed cylinders cool.

(vi) Unusual fire and explosion hazards: BD vapors are heavier than air and may travel to a source of ignition and flash back. Closed containers may rupture violently when heated.

(vii) For purposes of compliance with the requirements of WAC 296-24-330, BD is classified as a flammable gas. For example, 7,500 ppm, approximately one-fourth of the lower flammable limit, would be considered to pose a potential fire and explosion hazard.

(viii) For purposes of compliance with WAC 296-24-585, BD is classified as a Class B fire hazard.

(ix) For purposes of compliance with WAC 296-24-956 and 296-800-280, locations classified as hazardous due to the presence of BD shall be Class I.

(b) Reactivity:

(i) Conditions contributing to instability: Heat. Peroxides are formed when inhibitor concentration is not maintained at proper level. At elevated temperatures, such as in fire conditions, polymerization may take place.

(ii) Incompatibilities: Contact with strong oxidizing agents may cause fires and explosions. The contacting of crude BD (not BD monomer) with copper and copper alloys may cause formations of explosive copper compounds.

(iii) Hazardous decomposition products: Toxic gases (such as carbon monoxide) may be released in a fire involving BD.

(iv) Special precautions: BD will attack some forms of plastics, rubber, and coatings. BD in storage should be checked for proper inhibitor content, for self-polymerization, and for formation of peroxides when in contact with air and iron. Piping carrying BD may become plugged by formation of rubbery polymer.

(c) Warning Properties:

(i) Odor Threshold: An odor threshold of 0.45 ppm has been reported in The American Industrial Hygiene Association (AIHA) Report, Odor Thresholds for Chemicals with Established Occupational Health Standards. (Ex. 32-28C).

(ii) Eye Irritation Level: Workers exposed to vapors of BD (concentration or purity unspecified) have complained of irritation of eyes, nasal passages, throat, and lungs. Dogs and rabbits exposed experimentally to as much as 6700 ppm for 7 1/2 hours a day for 8 months have developed no histologically demonstrable abnormality of the eyes.

(iii) Evaluation of Warning Properties: Since the mean odor threshold is about half of the 1 ppm PEL, and more than 10-fold below the 5 ppm STEL, most wearers of air purifying respirators should still be able to detect breakthrough before a significant overexposure to BD occurs.

(3) **Spill, Leak, and Disposal Procedures**.

(a) Persons not wearing protective equipment and clothing should be restricted from areas of spills or leaks until cleanup has been completed. If BD is spilled or leaked, the following steps should be taken:

(i) Eliminate all ignition sources.

(ii) Ventilate areas of spill or leak.

(iii) If in liquid form, for small quantities, allow to evaporate in a safe manner.

(iv) Stop or control the leak if this can be done without risk. If source of leak is a cylinder and the leak cannot be stopped in place, remove the leaking cylinder to a safe place and repair the leak or allow the cylinder to empty.

(b) Disposal: This substance, when discarded or disposed of, is a hazardous waste according to Federal regulations (40 CFR part 261). It is listed by the EPA as hazardous waste number D001 due to its ignitability. The transportation, storage, treatment, and disposal of this waste material must be conducted in compliance with 40 CFR parts 262, 263, 264, 268 and 270. Disposal can occur only in properly permitted facilities. Check state and local regulations for any additional requirements because these may be more restrictive than federal laws and regulations.

(4) **Monitoring and Measurement Procedures**.

(a) Exposure above the Permissible Exposure Limit (8-hr TWA) or Short-Term Exposure Limit (STEL):

(i) 8-hr TWA exposure evaluation: Measurements taken for the purpose of determining employee exposure under this standard are best taken with consecutive samples covering the full shift. Air samples must be taken in the employee's breathing zone (air that would most nearly represent that inhaled by the employee).

(ii) STEL exposure evaluation: Measurements must represent 15 minute exposures associated with operations most likely to exceed the STEL in each job and on each shift.

(iii) Monitoring frequencies: Table 1 gives various exposure scenarios and their required monitoring frequencies, as required by the final standard for occupational exposure to butadiene.

Table 1. - Five Exposure Scenarios and Their Associated Monitoring Frequencies			
Action Level	**8-hr TWA**	**STEL**	**Required Monitoring Activity**
–*	–	–	No 8-hr TWA or STEL monitoring required.
+*	–	–	No STEL monitoring required. Monitor 8-hr
			TWA annually.
+	–	–	No STEL monitoring required. Periodic
			monitoring 8-hr TWA, in accordance with
			(4)(c)(iii).**
+	+	+	Periodic monitoring 8-hr TWA, in accordance
			with (4)(c)(iii)**. Periodic monitoring STEL
			in accordance with (4)(c)(iii).
+	–	+	Periodic monitoring STEL, in accordance with (4)(c)(iii). Monitor 8-hr TWA annually.

Footnote(*) Exposure Scenario, Limit Exceeded: + = Yes, - = No.

Footnote(**) The employer may decrease the frequency of exposure monitoring to annually when at least 2 consecutive measurements taken at least 7 days apart show exposures to be below the 8-hr TWA, but at or above the action level.

(iv) Monitoring techniques: Appendix D describes the validated method of sampling and analysis which has been tested by OSHA for use with BD. The employer has the obligation of selecting a monitoring method which meets the accuracy and precision requirements of the standard under their unique field conditions. The standard requires that the method of monitoring must be accurate, to a 95 percent confidence level, to plus or minus 25 percent for concentrations of BD at or above 1 ppm, and to plus or minus 35 percent for concentrations below 1 ppm.

(5) **Personal Protective Equipment**.

(a) Employees should be provided with and required to use impervious clothing, gloves, face shields (eight-inch minimum), and other appropriate protective clothing necessary to prevent the skin from becoming frozen from contact with liquid BD.

(b) Any clothing which becomes wet with liquid BD should be removed immediately and not re-worn until the butadiene has evaporated.

(c) Employees should be provided with and required to use splash proof safety goggles where liquid BD may contact the eyes.

(6) **Housekeeping and Hygiene Facilities**.

For purposes of complying with WAC 296-800-220 and 296-800-230, the following items should be emphasized:

(a) The workplace should be kept clean, orderly, and in a sanitary condition.

(b) Adequate washing facilities with hot and cold water are to be provided and maintained in a sanitary condition.

(7) **Additional Precautions**.

(a) Store BD in tightly closed containers in a cool, well-ventilated area and take all necessary precautions to avoid any explosion hazard.

(b) Non-sparking tools must be used to open and close metal containers. These containers must be effectively grounded.

(c) Do not incinerate BD cartridges, tanks or other containers.

(d) Employers must advise employees of all areas and operations where exposure to BD might occur.

Appendix C. Medical Screening and Surveillance for 1,3-Butadiene (Non-Mandatory).

(1) **Basis for Medical Screening and Surveillance Requirements**.

(a) Route of Entry Inhalation.

(b) Toxicology.

Inhalation of BD has been linked to an increased risk of cancer, damage to the reproductive organs, and fetotoxicity. Butadiene can be converted via oxidation to epoxybutene and diepoxybutane, two genotoxic metabolites that may play a role in the expression of BD's toxic effects. BD has been tested for carcinogenicity in mice and rats. Both species responded to BD exposure by developing cancer at multiple primary organ sites. Early deaths in mice were caused by malignant lymphomas, primarily lymphocytic type, originating in the thymus.

Mice exposed to BD have developed ovarian or testicular atrophy. Sperm head morphology tests also revealed abnormal sperm in mice exposed to BD; lethal mutations were found in a dominant lethal test. In light of these results in animals, the possibility that BD may adversely affect the reproductive systems of male and female workers must be considered.

Additionally, anemia has been observed in animals exposed to butadiene. In some cases, this anemia appeared to be a primary response to exposure; in other cases, it may have been secondary to a neoplastic response.

(c) Epidemiology.

Epidemiologic evidence demonstrates that BD exposure poses an increased risk of leukemia. Mild alterations of hematologic parameters have also been observed in synthetic rubber workers exposed to BD.

(2) **Potential Adverse Health Effects**.

(a) Acute.

Skin contact with liquid BD causes characteristic burns or frostbite. BD in gaseous form can irritate the eyes, nasal passages, throat, and lungs. Blurred vision, coughing, and drowsiness may also occur. Effects are mild at 2,000 ppm and pronounced at 8,000 ppm for exposures occurring over the full workshift.

At very high concentrations in air, BD is an anesthetic, causing narcosis, respiratory paralysis, unconsciousness, and death. Such concentrations are unlikely, however, except in an extreme emergency because BD poses an explosion hazard at these levels.

(b) Chronic.

The principal adverse health effects of concern are BD-induced lymphoma, leukemia and potential reproductive toxicity. Anemia and other changes in the peripheral blood cells may be indicators of excessive exposure to BD.

(c) Reproductive.

Workers may be concerned about the possibility that their BD exposure may be affecting their ability to procreate a healthy child. For workers with high exposures to BD, especially those who have experienced difficulties in conceiving, miscarriages, or stillbirths, appropriate medical and laboratory evaluation of fertility may be necessary to determine if BD is having any adverse effect on the reproductive system or on the health of the fetus.

(3) **Medical Screening Components At-A-Glance**.

(a) Health Questionnaire.

The most important goal of the health questionnaire is to elicit information from the worker regarding potential signs or symptoms generally related to leukemia or other blood abnormalities. Therefore, physicians or other licensed health care professionals should be aware of the presenting symptoms and signs of lymphohematopoietic disorders and cancers, as well as the procedures necessary to confirm or exclude such diagnoses. Additionally, the health questionnaire will assist with the identification of workers at greatest risk of developing leukemia or adverse reproductive effects from their exposures to BD.

Workers with a history of reproductive difficulties or a personal or family history of immune deficiency syndromes, blood dyscrasias, lymphoma, or leukemia, and those who are or have been exposed to medicinal drugs or chemicals known to affect the hematopoietic or lymphatic systems may be at higher risk from their exposure to BD. After the initial administration, the health questionnaire must be updated annually.

(b) Complete Blood Count (CBC).

The medical screening and surveillance program requires an annual CBC, with differential and platelet count, to be provided for each employee with BD exposure. This test is to be performed on a blood sample obtained by phlebotomy of the venous system or, if technically feasible, from a fingerstick sample of capillary blood. The sample is to be analyzed by an accredited laboratory.

Abnormalities in a CBC may be due to a number of different etiologies. The concern for workers exposed to BD includes, but is not limited to, timely identification of lymphohematopoietic cancers, such as leukemia and non-Hodgkin's lymphoma. Abnormalities of portions of the CBC are identified by comparing an individual's results to those of an established range of normal values for males and females.

A substantial change in any individual employee's CBC may also be viewed as "abnormal" for that individual even if all measurements fall within the population-based range of normal values. It is suggested that a flowsheet for laboratory values be included in each employee's medical record so that comparisons and trends in annual CBCs can be easily made.

A determination of the clinical significance of an abnormal CBC shall be the responsibility of the examining physician, other licensed health care professional, or medical specialist to whom the employee is referred. Ideally, an abnormal CBC should be compared to previous CBC measurements for the same employee, when available. Clinical common sense may dictate that a CBC value that is very slightly outside the normal range does not warrant medical concern. A CBC abnormality may also be the result of a temporary physical stressor, such as a transient viral illness, blood donation, or menorrhagia, or laboratory error. In these cases, the CBC should be repeated in a timely fashion, i.e., within 6 weeks, to verify that return to the normal range has occurred. A clinically significant abnormal CBC should result in removal of the employee from further exposure to BD. Transfer of the employee to other work duties in a BD-free environment would be the preferred recommendation.

(c) Physical Examination.

The medical screening and surveillance program requires an initial physical examination for workers exposed to BD; this examination is repeated once every three years. The initial physical examination should assess each worker's baseline general health and rule out clinical signs of medical conditions that may be caused by or aggravated by occupational BD exposure. The physical examination should be directed at identification of signs of lymphohematopoietic disorders, including lymph node enlargement, splenomegaly, and hepatomegaly.

Repeated physical examinations should update objective clinical findings that could be indicative of interim development of a lymphohematopoietic disorder, such as lymphoma, leukemia, or other blood abnormality. Physical examinations may also be provided on an as needed basis in order to follow up on a positive answer on the health questionnaire, or in response to an abnormal CBC. +Physical examination of workers who will no longer be working in jobs with BD exposure are intended to rule out lymphohematopoietic disorders.

The need for physical examinations for workers concerned about adverse reproductive effects from their exposure to BD should be identified by the physician or other licensed health care professional and provided accordingly. For these workers, such consultations and examinations may relate to developmental toxicity and reproductive capacity.

Physical examination of workers acutely exposed to significant levels of BD should be especially directed at the respiratory system, eyes, sinuses, skin, nervous system, and any region associated with particular complaints. If the worker has received a severe acute exposure, hospitalization may be required to assure proper medical management. Since this type of exposure may place workers at greater risk of blood abnormalities, a CBC must be obtained within 48 hours and repeated at one, two, and three months.

Appendix D: Sampling and Analytical Method for 1,3-Butadiene (Non-Mandatory).

OSHA Method No.: 56.

Matrix: Air.

Target concentration: 1 ppm (2.21 mg/m^3).

Procedure: Air samples are collected by drawing known volumes of air through sampling tubes containing charcoal adsorbent which has been coated with 4-tert-butylcatechol. The samples are desorbed with carbon disulfide and then analyzed by gas chromatography using a flame ionization detector.

Recommended sampling rate and air volume: 0.05 L/min and 3 L.

Detection limit of the overall procedure: 90 ppb (200 µg/m^3) (based on 3 L air volume).

Reliable quantitation limit: 155 ppb (343 µg/m^3) (based on 3 L air volume).

Standard error of estimate at the target concentration: 6.5%.

Special requirements: The sampling tubes must be coated with 4-tert-butylcatechol. Collected samples should be stored in a freezer.

Status of method: A sampling and analytical method has been subjected to the established evaluation procedures of the Organic Methods Evaluation Branch, OSHA Analytical Laboratory, Salt Lake City, Utah 84165.

(1) **Background**.

This work was undertaken to develop a sampling and analytical procedure for BD at 1 ppm. The current method recommended by OSHA for collecting BD uses activated coconut shell charcoal as the sampling medium (Ref. 5.2). This method was found to be inadequate for use at low BD levels because of sample instability.

The stability of samples has been significantly improved through the use of a specially cleaned charcoal which is coated with 4-tert-butylcatechol (TBC). TBC is a polymerization inhibitor for BD (Ref. 5.3).

(a) Toxic effects.

Symptoms of human exposure to BD include irritation of the eyes, nose and throat. It can also cause coughing, drowsiness and fatigue. Dermatitis and frostbite can result from skin exposure to liquid BD. (Ref. 5.1)

NIOSH recommends that BD be handled in the workplace as a potential occupational carcinogen. This recommendation is based on two inhalation studies that resulted in cancers at multiple sites in rats and in mice. BD has also demonstrated mutagenic activity in the presence of a liver microsomal activating system. It has also been reported to have adverse reproductive effects. (Ref. 5.1)

(b) Potential workplace exposure.

About 90% of the annual production of BD is used to manufacture styrene-butadiene rubber and Polybutadiene rubber. Other uses include: Polychloroprene rubber, acrylonitrile butadiene-styrene resins, nylon intermediates, styrene-butadiene latexes, butadiene polymers, thermoplastic elastomers, nitrile resins, methyl methacrylate-butadiene styrene resins and chemical intermediates. (Ref. 5.1)

(c) Physical properties (Ref. 5.1).

CAS No.:	106-99-0
Molecular weight:	54.1
Appearance:	Colorless gas
Boiling point:	-4.41 deg. C (760 mm Hg)
Freezing point:	-108.9 deg. C
Vapor pressure:	2 atm (a) 15.3 deg. C; 5 atm (a) 47 deg. C
Explosive limits:	2 to 11.5% (by volume in air)
Odor threshold:	0.45 ppm
Structural formula:	$H_2C{:}CHCH{:}CH_2$

Synonyms: BD; biethylene; bivinyl; butadiene; divinyl; buta-1,3-diene; alpha-gamma-butadiene; erythrene; NCI-C50602; pyrrolylene; vinylethylene.

(d) Limit defining parameters.

The analyte air concentrations listed throughout this method are based on an air volume of 3 L and a desorption volume of 1 mL. Air concentrations listed in ppm are referenced to 25 deg. C and 760 mm Hg.

(e) Detection limit of the analytical procedure.

The detection limit of the analytical procedure was 304 pg per injection. This was the amount of BD which gave a response relative to the interferences present in a standard.

(f) Detection limit of the overall procedure.

The detection limit of the overall procedure was 0.60 ug per sample (90 ppb or 200 ug/m^3). This amount was determined graphically. It was the amount of analyte which, when spiked on the sampling device, would allow recovery approximately equal to the detection limit of the analytical procedure.

(g) Reliable quantitation limit.

The reliable quantitation limit was 1.03 µg per sample (155 ppb or 343 $\mu g/m^3$). This was the smallest amount of analyte which could be quantitated within the limits of a recovery of at least 75% and a precision (+/- 1.96 SD) of +/- 25% or better.

(h) Sensitivity.(1)

Footnote(1) The reliable quantitation limit and detection limits reported in the method are based upon optimization of the instrument for the smallest possible amount of analyte. When the target concentration of an analyte is exceptionally higher than these limits, they may not be attainable at the routine operation parameters.

The sensitivity of the analytical procedure over a concentration range representing 0.6 to 2 times the target concentration, based on the recommended air volume, was 387 area units per µg/mL. This value was determined from the slope of the calibration curve. The sensitivity may vary with the particular instrument used in the analysis.

(i) Recovery.

The recovery of BD from samples used in storage tests remained above 77% when the samples were stored at ambient temperature and above 94% when the samples were stored at refrigerated temperature. These values were determined from regression lines which were calculated from the storage data. The recovery of the analyte from the collection device must be at least 75% following storage.

(j) Precision (analytical method only).

The pooled coefficient of variation obtained from replicate determinations of analytical standards over the range of 0.6 to 2 times the target concentration was 0.011.

(k) Precision (overall procedure).

The precision at the 95% confidence level for the refrigerated temperature storage test was +/- 12.7%. This value includes an additional +/- 5% for sampling error. The overall procedure must provide results at the target concentrations that are +/- 25% at the 95% confidence level.

(l) Reproducibility.

Samples collected from a controlled test atmosphere and a draft copy of this procedure were given to a chemist unassociated with this evaluation. The average recovery was 97.2% and the standard deviation was 6.2%.

(2) **Sampling procedure**.

(a) Apparatus. Samples are collected by use of a personal sampling pump that can be calibrated to within +/- 5% of the recommended 0.05 L/min sampling rate with the sampling tube in line.

(b) Samples are collected with laboratory prepared sampling tubes. The sampling tube is constructed of silane-treated glass and is about 5-cm long. The ID is 4 mm and the OD is 6 mm. One end of the tube is tapered so that a glass wool end plug will hold the contents of the tube in place during sampling. The opening in the tapered end of the sampling tube is at least one-half the ID of the tube (2 mm). The other end of the sampling tube is open to its full 4-mm ID to facilitate packing of the tube. Both ends of the tube are fire-polished for safety. The tube is packed with 2 sections of pretreated charcoal which has been coated with TBC. The tube is packed with a 50-mg backup section, located nearest the tapered end, and with a 100-mg sampling section of charcoal. The two sections of coated adsorbent are separated and retained with small plugs of silanized glass wool. Following packing, the sampling tubes are sealed with two 7/32 inch OD plastic end caps.

Instructions for the pretreatment and coating of the charcoal are presented in Section 4.1 of this method.

(c) Reagents.

None required.

(d) Technique.

(i) Properly label the sampling tube before sampling and then remove the plastic end caps.

(ii) Attach the sampling tube to the pump using a section of flexible plastic tubing such that the larger front section of the sampling tube is exposed directly to the atmosphere. Do not place any tubing ahead of the sampling tube. The sampling tube should be attached in the worker's breathing zone in a vertical manner such that it does not impede work performance.

(iii) After sampling for the appropriate time, remove the sampling tube from the pump and then seal the tube with plastic end caps. Wrap the tube lengthwise.

(iv) Include at least one blank for each sampling set. The blank should be handled in the same manner as the samples with the exception that air is not drawn through it.

(v) List any potential interferences on the sample data sheet.

(vi) The samples require no special shipping precautions under normal conditions. The samples should be refrigerated if they are to be exposed to higher than normal ambient temperatures. If the samples are to be stored before they are shipped to the laboratory, they should be kept in a freezer. The samples should be placed in a freezer upon receipt at the laboratory.

(e) Breakthrough.

(Breakthrough was defined as the relative amount of analyte found on the backup section of the tube in relation to the total amount of analyte collected on the sampling tube. Five-percent breakthrough occurred after sampling a test atmosphere containing 2.0 ppm BD for 90 min. at 0.05 L/min. At the end of this time 4.5 L of air had been sampled and 20.1 µg of the analyte was collected. The relative humidity of the sampled air was 80% at 23 deg. C.)

Breakthrough studies have shown that the recommended sampling procedure can be used at air concentrations higher than the target concentration. The sampling time, however, should be reduced to 45 min. if both the expected BD level and the relative humidity of the sampled air are high.

(f) Desorption efficiency.

The average desorption efficiency for BD from TBC coated charcoal over the range from 0.6 to 2 times the target concentration was 96.4%. The efficiency was essentially constant over the range studied.

(g) Recommended air volume and sampling rate.

(h) The recommended air volume is 3 L.

(i) The recommended sampling rate is 0.05 L/min. for 1 hour.

(j) Interferences.

There are no known interferences to the sampling method.

(k) Safety precautions.

(i) Attach the sampling equipment to the worker in such a manner that it will not interfere with work performance or safety.

(ii) Follow all safety practices that apply to the work area being sampled.

(3) **Analytical procedure**.

(a) Apparatus.

(i) A gas chromatograph (GC), equipped with a flame ionization detector (FID).(2)

Footnote(2) A Hewlett-Packard Model 5840A GC was used for this evaluation. Injections were performed using a Hewlett-Packard Model 7671A automatic sampler.

(ii) A GC column capable of resolving the analytes from any interference.(3)

Footnote(3) A 20-ft x 1/8-inch OD stainless steel GC column containing 20% FFAP on 80/100 mesh Chromabsorb W-AW-DMCS was used for this evaluation.

(iii) Vials, glass 2-mL with Teflon-lined caps.

(iv) Disposable Pasteur-type pipets, volumetric flasks, pipets and syringes for preparing samples and standards, making dilutions and performing injections.

(b) Reagents.

(i) Carbon disulfide.(4)

Footnote(4) Fisher Scientific Company A.C.S. Reagent Grade solvent was used in this evaluation.

The benzene contaminant that was present in the carbon disulfide was used as an internal standard (ISTD) in this evaluation.

(ii) Nitrogen, hydrogen and air, GC grade.

(iii) BD of known high purity.(5)

Footnote(5) Matheson Gas Products, CP Grade 1,3-butadiene was used in this study.

(c) Standard preparation.

(i) Prepare standards by diluting known volumes of BD gas with carbon disulfide. This can be accomplished by injecting the appropriate volume of BD into the headspace above the 1-mL of carbon disulfide contained in sealed 2-mL vial. Shake the vial after the needle is removed from the septum.(6)

Footnote(6) A standard containing 7.71 µg/mL (at ambient temperature and pressure) was prepared by diluting 4 µL of the gas with 1-mL of carbon disulfide.

(ii) The mass of BD gas used to prepare standards can be determined by use of the following equations:

MV = (760/BP)(273+t)/(273)(22.41)

Where:

MV = ambient molar volume BP = ambient barometric pressure T = ambient temperature µg/L = 54.09/MV µg/standard = (µg/µL)(µL) BD used to prepare the standard.

(d) Sample preparation.

(i) Transfer the 100-mg section of the sampling tube to a 2-mL vial. Place the 50-mg section in a separate vial. If the glass wool plugs contain a significant amount of charcoal, place them with the appropriate sampling tube section.

(ii) Add 1-mL of carbon disulfide to each vial.

(iii) Seal the vials with Teflon-lined caps and then allow them to desorb for one hour. Shake the vials by hand vigorously several times during the desorption period.

(iv) If it is not possible to analyze the samples within 4 hours, separate the carbon disulfide from the charcoal, using a disposable Pasteur-type pipet, following the one hour. This separation will improve the stability of desorbed samples.

(v) Save the used sampling tubes to be cleaned and repacked with fresh adsorbent.

(e) Analysis.

(i) GC Conditions.

Column temperature: 95 deg. C
Injector temperature: 180 deg. C
Detector temperature: 275 deg. C
Carrier gas flow rate: 30 mL/min.
Injection volume: 0.80 µL
GC column: 20-ft x 1/8-in OD stainless steel GC column containing 20% FFAP on 80/100 Chromabsorb W-AW-DMCS.

(ii) Chromatogram. See Section 4.2.

(iii) Use a suitable method, such as electronic or peak heights, to measure detector response.

(iv) Prepare a calibration curve using several standard solutions of different concentrations. Prepare the calibration curve daily. Program the integrator to report the results in µg/mL.

(v) Bracket sample concentrations with standards.

(f) Interferences (analytical).

(i) Any compound with the same general retention time as the analyte and which also gives a detector response is a potential interference. Possible interferences should be reported by the industrial hygienist to the laboratory with submitted samples.

(ii) GC parameters (temperature, column, etc.) may be changed to circumvent interferences.

(iii) A useful means of structure designation is GC/MS. It is recommended that this procedure be used to confirm samples whenever possible.

(g) Calculations.

(i) Results are obtained by use of calibration curves. Calibration curves are prepared by plotting detector response against concentration for each standard. The best line through the data points is determined by curve fitting.

(ii) The concentration, in µg/mL, for a particular sample is determined by comparing its detector response to the calibration curve. If any analyte is found on the backup section, this amount is added to the amount found on the front section. Blank corrections should be performed before adding the results together.

(iii) The BD air concentration can be expressed using the following equation:

$mg/m^3 = (A)(B)/(C)(D)$

Where:

A = µg/mL from Section 3.7.2 B = volume C = L of air sampled D = efficiency

(iv) The following equation can be used to convert results in mg/m3 to ppm:

$ppm = (mg/m^3)(24.46)/54.09$

Where:

mg/m^3 = result from Section 3.7.3. 24.46 = molar volume of an ideal gas at 760 mm Hg and 25 deg. C.

(h) Safety precautions (analytical).

(i) Avoid skin contact and inhalation of all chemicals.

(ii) Restrict the use of all chemicals to a fume hood whenever possible.

(iii) Wear safety glasses and a lab coat in all laboratory areas.

(4) **Additional Information**.

(a) A procedure to prepare specially cleaned charcoal coated with TBC.

(i) Apparatus.

(A) Magnetic stirrer and stir bar.

(B) Tube furnace capable of maintaining a temperature of 700 deg. C and equipped with a quartz tube that can hold 30 g of charcoal.(8)

Footnote(8) A Lindberg Type 55035 Tube furnace was used in this evaluation.

(C) A means to purge nitrogen gas through the charcoal inside the quartz tube.

(D) Water bath capable of maintaining a temperature of 60 deg. C.

(E) Miscellaneous laboratory equipment: One-liter vacuum flask, 1-L Erlenmeyer flask, 350-M1 Buchner funnel with a coarse fitted disc, 4-oz brown bottle, rubber stopper, Teflon tape etc.

(ii) Reagents.

(A) Phosphoric acid, 10% by weight, in water.(9)

Footnote(9) Baker Analyzed Reagent grade was diluted with water for use in this evaluation.

(B) 4-tert-Butylcatechol (TBC).(10)

Footnote(10) The Aldrich Chemical Company 99% grade was used in this evaluation.

(C) Specially cleaned coconut shell charcoal, 20/40 mesh.(11)

Footnote(11) Specially cleaned charcoal was obtained from Supelco, Inc. for use in this evaluation. The cleaning process used by Supelco is proprietary.

(D) Nitrogen gas, GC grade.

(iii) Procedure.

Weigh 30g of charcoal into a 500-mL Erlenmeyer flask. Add about 250 mL of 10% phosphoric acid to the flask and then swirl the mixture. Stir the mixture for 1 hour using a magnetic stirrer. Filter the mixture using a fitted Buchner funnel. Wash the charcoal several times with 250-mL portions of deionized water to remove all traces of the acid. Transfer the washed charcoal to the tube furnace quartz tube. Place the quartz tube in the furnace and then connect the nitrogen gas purge to the tube. Fire the charcoal to 700 deg. C. Maintain that temperature for at least 1 hour. After the charcoal has cooled to room temperature, transfer it to a tared beaker. Determine the weight of the charcoal and then add an amount of TBC which is 10% of the charcoal, by weight.

CAUTION-TBC is toxic and should only be handled in a fume hood while wearing gloves.

Carefully mix the contents of the beaker and then transfer the mixture to a 4-oz bottle. Stopper the bottle with a clean rubber stopper which has been wrapped with Teflon tape. Clamp the bottle in a water bath so that the water level is above the charcoal level. Gently heat the bath to 60 deg. C and then maintain that temperature for 1 hour. Cool the charcoal to room temperature and then transfer the coated charcoal to a suitable container.

The coated charcoal is now ready to be packed into sampling tubes. The sampling tubes should be stored in a sealed container to prevent contamination. Sampling tubes should be stored in the dark at room temperature. The sampling tubes should be segregated by coated adsorbent lot number.

(b) Chromatograms.

The chromatograms were obtained using the recommended analytical method. The chart speed was set at 1 cm/min. for the first three min. and then at 0.2 cm/min. for the time remaining in the analysis.

The peak which elutes just before BD is a reaction product between an impurity on the charcoal and TBC. This peak is always present, but it is easily resolved from the analyte. The peak which elutes immediately before benzene is an oxidation product of TBC.

(5) **References**.

(a) "Current Intelligence Bulletin 41, 1,3-Butadiene," U.S. Dept. of Health and Human Services, Public Health Service, Center for Disease Control, NIOSH.

(b) "NIOSH Manual of Analytical Methods," 2nd ed.; U.S. Dept. of Health Education and Welfare, National Institute for Occupational Safety and Health: Cincinnati, OH. 1977, Vol. 2, Method No. S91 DHEW (NIOSH) Publ. (U.S.), No. 77-157-B.

(c) Hawley, G.C., Ed. "The Condensed Chemical Dictionary," 8th ed.; Van Nostrand Rienhold Company: New York, 1971; 139.5.4. Chem. Eng. News (June 10, 1985), (63), 22-66.

Appendix E: Reserved.

Appendix F, MEDICAL QUESTIONNAIRES, (Non-mandatory).

1,3-Butadiene (BD) Initial Health Questionnaire

DIRECTIONS:

You have been asked to answer the questions on this form because you work with BD (butadiene). These questions are about your work, medical history, and health concerns. Please do your best to answer all of the questions. If you need help, please tell the doctor or health care professional who reviews this form.

This form is a confidential medical record. Only information directly related to your health and safety on the job may be given to your employer. Personal health information will not be given to anyone without your consent.

Date:_____

Name:_____ SSN: ___ /__ /____

Last First MI

Job Title:_____

Company's Name:_____

Supervisor's Name: _____Supervisor's Phone No.: (___)___-____

Work History:

1. Please list all jobs you have had in the past, starting with the job you have now and moving back in time to your first job. (For more space, write on the back of this page.)
   Main Job Duty
   Year
   Company Name
   City, State
   Chemicals
   1.
   2.
   3.
   4.
   5.
   6.

7.
8.

2. Please describe what you do during a typical work day. Be sure to tell about your work with BD.

3. Please check any of these chemicals that you work with now or have worked with in the past:

benzene _____
glues _____
toluene _____
inks, dyes _____
other solvents, grease cutters _____
insecticides (like DDT, lindane, etc.) _____
paints, varnishes, thinners, strippers _____
dusts _____
carbon tetrachloride ("carbon tet") _____
arsine _____
carbon disulfide _____
lead _____
cement _____
petroleum products _____
nitrites _____

4. Please check the protective clothing or equipment you use at the job you have now:

gloves _____
coverall _____
respirator _____
dust mask _____
safety glasses, goggles _____

Please circle your answer.

5. Does your protective clothing or equipment fit you properly? yes no

6. Have you ever made changes in your protective clothing or equipment to make it fit better? yes no

7. Have you been exposed to BD when you were not wearing protective clothing or equipment? yes no

8. Where do you eat, drink and/or smoke when you are at work? (Please check all that apply.)

Cafeteria/restaurant/snack bar _____
Break room/employee lounge _____
Smoking lounge _____
At my work station _____

Please circle your answer.

9. Have you been exposed to radiation (like x-rays or nuclear material) at the job you have now or at past jobs? yes no

10. Do you have any hobbies that expose you to dusts or chemicals (including paints, glues, etc.)? yes no
11. Do you have any second or side jobs? yes no
    If yes, what are your duties there?
12. Were you in the military? yes no
    If yes, what did you do in the military?

    _____

    _____

Family Health History

1. In the FAMILY MEMBER column, across from the disease name, write which family member, if any, had the disease.

DISEASE	FAMILY MEMBER
Cancer	
Lymphoma	
Sickle Cell Disease or Trait	
Immune Disease	
Leukemia	
Anemia	

2. Please fill in the following information about family health

Relative				
Alive?				
Age at Death?				
Cause of Death?				
Father				
Mother				
Brother/Sister				
Brother/Sister				
Brother/Sister				

Personal Health History

Birth Date__/__/__ Age___ Sex__ Height_____
Weight_____

Please circle your answer.

1. Do you smoke any tobacco products? yes no
2. Have you ever had any kind of surgery or operation? yes no
   If yes, what type of
   surgery:_____

   _____
3. Have you ever been in the hospital for any other reasons? yes no
   If yes, please describe the reason

   _____
4. Do you have any on-going or current medical problems or conditions? yes no
   If yes, please
   describe:_____

5. Do you now have or have you ever had any of the following? Please check all that apply to you.

unexplained fever _____
anemia ("low blood") _____
HIV/AIDS _____
weakness _____
sickle cell _____
miscarriage _____
skin rash _____
bloody stools _____
leukemia/lymphoma _____
neck mass/swelling _____
wheezing _____
yellowing of skin _____
bruising easily _____
lupus _____
weight loss _____
kidney problems _____
enlarged lymph nodes _____
liver disease _____
cancer _____
infertility _____
drinking problems _____
thyroid problems _____
night sweats _____
chest pain _____
still birth _____
eye redness _____
lumps you can feel _____
child with birth defect _____
autoimmune disease _____
overly tired _____
lung problems _____
rheumatoid arthritis _____
mononucleosis ("mono") _____
nagging cough _____

Please circle your answer.

6. Do you have any symptoms or health problems that you think may be related to your work with BD? yes no

If yes, please describe:_____

_____

7. Have any of your co-workers had similar symptoms or problems?
yes no don't know
If yes, please
describe:_____
_____

8. Do you notice any irritation of your eyes, nose, throat, lungs, or skin when working with BD? yes no

9. Do you notice any blurred vision, coughing, drowsiness, nausea, or headache when working with BD? yes no

10. Do you take any medications (including birth control or over-the-counter)? yes no
If yes, please
list:_____
_____

11. Are you allergic to any medication, food, or chemicals? yes no
If yes, please
list:_____
_____

12. Do you have any health conditions not covered by this questionnaire that you think are affected by your work with BD? yes no
If yes, please
explain:_____
_____

13. Did you understand all the questions? yes no

Signature
_____

1,3-Butadiene (BD) Health Update Questionnaire.

DIRECTIONS:

You have been asked to answer the questions on this form because you work with BD (butadiene). These questions are about your work, medical history, and health concerns. Please do your best to answer all of the questions. If you need help, please tell the doctor or health care professional who reviews this form.

This form is a confidential medical record. Only information directly related to your health and safety on the job may be given to your employer. Personal health information will not be given to anyone without your consent.

Date:_____
Name:_____ SSN:___/__/____
Last First MI
Job Title:_____
Company's Name:_____
Supervisor's Name:_____Supervisor's Phone No.:(___)___-____

1. Please describe any NEW duties that you have at your job:_____
_____

2. Please describe any additional job duties you have:

_____ _____
_____ _____
_____ _____
_____ _____

Please circle your answer.

3. Are you exposed to any other chemicals in your work since the last time you were evaluated for exposure to BD? yes no
If yes, please list what they are:_____
_____

4. Does your personal protective equipment and clothing fit you properly? yes no
5. Have you made changes in this equipment or clothing to make if fit better? yes no
6. Have you been exposed to BD when you were not wearing protective clothing or equipment? yes no
7. Are you exposed to any NEW chemicals at home or while working on hobbies? yes no
If yes, please list what they are:
8. Since your last BD health evaluation, have you started working any new second or side jobs? yes no
If yes, what are your duties there?_____
_____

Personal Health History

1. What is your current weight?_____pounds
2. Have you been diagnosed with any new medical conditions or illness since your last evaluation? yes no
If yes, please tell what they are:_____
_____

3. Since your last evaluation, have you been in the hospital for any illnesses, injuries, or surgery yes no
If yes, please describe:_____
_____

4. Do you have any of the following? Please place a check for all that apply to you.

unexplained fever _____
anemia (“low blood”) _____
HIV/AIDS _____
weakness _____
sickle cell _____
miscarriage _____

skin rash _____
bloody stools _____
leukemia/lymphoma _____
neck mass/swelling _____
wheezing _____
yellowing of skin _____
bruising easily _____
lupus _____
weight loss _____
kidney problems _____
enlarged lymph nodes _____
liver disease _____
cancer _____
infertility _____
drinking problems _____
thyroid problems _____
night sweats _____
chest pain _____
still birth _____
eye redness _____
lumps you can feel _____
child with birth defect _____
autoimmune disease _____
overly tired _____
lung problems _____
rheumatoid arthritis _____
mononucleosis ("mono") _____
nagging cough _____

Please circle your answer.

5. Do you have any symptoms or health problems that you think may be related to your work with BD? yes no
   If yes, please describe:_____
   _____

6. Have any of your co-workers had similar symptoms or problems? yes no don't know
   If yes, please describe:_____
   _____

7. Do you notice any irritation of your eyes, nose, throat, lungs, or skin when working with BD? yes no

8. Do you notice any blurred vision, coughing, drowsiness, nausea, or headache when working with BD? yes no

9. Have you been taking any NEW medications (including birth control or over-the-counter)? yes no

If yes, please list: _____ _____ _____
_____ _____ _____ _____

10. Have you developed any new allergies to medications, foods, or chemicals? yes no
If yes, please list: _____ _____ _____
_____ _____ _____ _____

11. Do you have any health conditions not covered by this questionnaire that you think are affected by your work with BD? yes no
If yes, please explain:_____
_____

12. Do you understand all the questions? yes no
*Signature _____

WAC 296-62-07470 Methylene chloride.

This occupational health standard establishes requirements for employers to control occupational exposure to methylene chloride (MC). Employees exposed to MC are at increased risk of developing cancer, adverse effects on the heart, central nervous system and liver, and skin or eye irritation. Exposure may occur through inhalation, by absorption through the skin, or through contact with the skin. MC is a solvent which is used in many different types of work activities, such as paint stripping, polyurethane foam manufacturing, and cleaning and degreasing. Under the requirements of subsection (4) of this section, each covered employer must make an initial determination of each employee's exposure to MC. If the employer determines that employees are exposed below the action level, the only other provisions of this section that apply are that a record must be made of the determination, the employees must receive information and training under subsection (12) of this section and, where appropriate, employees must be protected from contact with liquid MC under subsection (8) of this section.

The provisions of the MC standard are as follows:

(1) **Scope and application**. This section applies to all occupational exposures to methylene chloride (MC), Chemical Abstracts Service Registry Number 75-09-2, in general industry, construction and shipyard employment.

(2) **Definitions**. For the purposes of this section, the following definitions shall apply:

Action level. A concentration of airborne MC of 12.5 parts per million (ppm) calculated as an eight (8)-hour time-weighted average (TWA).

Authorized person Any person specifically authorized by the employer and required by work duties to be present in regulated areas, or any person entering such an area as a designated representative of employees for the purpose of exercising the right to observe monitoring and measuring procedures under subsection (4) of this section, or any other person authorized by the WISH Act or regulations issued under the act.

Director. The director of the department of labor and industries, or designee.

Emergency. Any occurrence, such as, but not limited to, equipment failure, rupture of containers, or failure of control equipment, which results, or is likely to result in an uncontrolled release of MC. If an incidental release of MC can be controlled by employees such as maintenance personnel at the time of release and in accordance with the leak/spill provisions required by subsection (6) of this section, it is not considered an emergency as defined by this standard.

Employee exposure. Exposure to airborne MC which occurs or would occur if the employee were not using respiratory protection.

Methylene chloride (MC) An organic compound with chemical formula, CH_2C1_2. Its Chemical Abstracts Service Registry Number is 75-09-2. Its molecular weight is 84.9 g/mole.

Physician or other licensed health care professional An individual whose legally permitted scope of practice (i.e., license, registration, or certification) allows them to independently provide or be delegated the responsibility to provide some or all of the health care services required by subsection (10) of this section.

Regulated area. An area, demarcated by the employer, where an employee's exposure to airborne concentrations of MC exceeds or can reasonably be expected to exceed either the 8-hour TWA PEL or the STEL.

Symptom. Central nervous system effects such as headaches, disorientation, dizziness, fatigue, and decreased attention span; skin effects such as chapping, erythema, cracked skin, or skin burns; and cardiac effects such as chest pain or shortness of breath.

This section. This methylene chloride standard.

(3) **Permissible exposure limits (PELs)**.

(a) Eight-hour time-weighted average (TWA) PEL. The employer must ensure that no employee is exposed to an airborne concentration of MC in excess of twenty-five parts of MC per million parts of air (25 ppm) as an 8-hour TWA.

(b) Short-term exposure limit (STEL). The employer must ensure that no employee is exposed to an airborne concentration of MC in excess of one hundred and twenty-five parts of MC per million parts of air (125 ppm) as determined over a sampling period of fifteen minutes.

(4) **Exposure monitoring**.

(a) Characterization of employee exposure.

(i) Where MC is present in the workplace, the employer must determine each employee's exposure by either:

(A) Taking a personal breathing zone air sample of each employee's exposure; or

(B) Taking personal breathing zone air samples that are representative of each employee's exposure.

(ii) Representative samples. The employer may consider personal breathing zone air samples to be representative of employee exposures when they are taken as follows:

(A) 8-hour TWA PEL. The employer has taken one or more personal breathing zone air samples for at least one employee in each job classification in a work area during every work shift, and the employee sampled is expected to have the highest MC exposure.

(B) Short-term exposure limits. The employer has taken one or more personal breathing zone air samples which indicate the highest likely 15-minute exposures during such operations for at least one employee in each job classification in the work area during every work shift, and the employee sampled is expected to have the highest MC exposure.

(C) Exception. Personal breathing zone air samples taken during one work shift may be used to represent employee exposures on other work shifts where the employer can document that the tasks performed and conditions in the workplace are similar across shifts.

(iii) Accuracy of monitoring. The employer must ensure that the methods used to perform exposure monitoring produce results that are accurate to a confidence level of 95 percent, and are:

(A) Within plus or minus 25 percent for airborne concentrations of MC above the 8-hour TWA PEL or the STEL; or

(B) Within plus or minus 35 percent for airborne concentrations of MC at or above the action level but at or below the 8-hour TWA PEL.

(b) Initial determination. Each employer whose employees are exposed to MC must perform initial exposure monitoring to determine each affected employee's exposure, except under the following conditions:

(i) Where objective data demonstrate that MC cannot be released in the workplace in airborne concentrations at or above the action level or above the STEL. The objective data must represent the highest MC exposures likely to occur under reasonably foreseeable conditions of processing, use, or handling. The employer must document the objective data exemption as specified in subsection (13) of this section;

(ii) Where the employer has performed exposure monitoring within twelve months prior to December 1, and that exposure monitoring meets all other requirements of this section, and was conducted under conditions substantially equivalent to existing conditions; or

(iii) Where employees are exposed to MC on fewer than 30 days per year (e.g., on a construction site), and the employer has measurements by direct reading instruments which give immediate results (such as a detector tube) and which provide sufficient information regarding employee exposures to determine what control measures are necessary to reduce exposures to acceptable levels.

(c) Periodic monitoring. Where the initial determination shows employee exposures at or above the action level or above the STEL, the employer must establish an exposure monitoring program for periodic monitoring of employee exposure to MC in accordance with Table 1:

Table 1 Six Initial Determination Exposure Scenarios and their Associated Monitoring Frequencies	
Exposure scenario	**Required monitoring activity**
Below the action level and at or below the STEL.	No eight-hour TWA or STEL monitoring required.
Below the action level and above the STEL.	No eight-hour TWA monitoring required, monitor STEL exposures every three months.
At or above the action level, at or below the TWA, and at or below the STEL.	Monitor eight-hour TWA exposures every six months.
At or above the action level, at or below the TWA, and above the STEL.	Monitor eight-hour TWA exposures every six months and monitor STEL exposures every three months.
Above the TWA and at or below the STEL	Monitor eight-hour TWA exposures every three months. In addition, without regard to the last sentence of the note to subsection (3) of this section, the following employers must monitor STEL exposures every three months until either the date by which they must achieve the eight-hour TWAs PEL under subsection (3) of this section or the date by which they in fact achieve the eight-hour TWA PEL, whichever comes first. • Employers engaged in polyurethane foam manufacturing; • Foam fabrication; • Furniture refinishing; • General aviation aircraft stripping; • Product formulation; • Use of MC-based adhesives for boat building and repair; • Recreational vehicle manufacture, van conversion, or upholstery, and use of MC in construction work for restoration and preservation of buildings, painting and paint removal, cabinet making, or floor refinishing and resurfacing.
Above the TWA and above the STEL	Monitor both eight-hour TWA exposures and STEL exposures every three months.

(Note to subsection (4)(c) of this section: The employer may decrease the frequency of exposure monitoring to every six months when at least 2 consecutive measurements taken at least 7 days apart show exposures to be at or below the 8-hour TWA PEL. The employer may discontinue the periodic 8-hour TWA monitoring for employees where at least two consecutive measurements taken at least 7 days apart are below the action level. The employer may discontinue the periodic STEL monitoring for employees where at least two consecutive measurements taken at least 7 days apart are at or below the STEL.)

(d) Additional monitoring.

(i) The employer must perform exposure monitoring when a change in workplace conditions indicates that employee exposure may have increased. Examples of situations that may require additional monitoring include changes in production, process, control equipment, or work-practices, or a leak, rupture, or other breakdown.

(ii) Where exposure monitoring is performed due to a spill, leak, rupture or equipment breakdown, the employer must clean up the MC and perform the appropriate repairs before monitoring.

(e) Employee notification of monitoring results.

(i) The employer must, within 15 working days after the receipt of the results of any monitoring performed under this section, notify each affected employee of these results in writing, either individually or by posting of results in an appropriate location that is accessible to affected employees.

(ii) Whenever monitoring results indicate that employee exposure is above the 8-hour TWA PEL or the STEL, the employer must describe in the written notification the corrective action being taken to reduce employee exposure to or below the 8-hour TWA PEL or STEL and the schedule for completion of this action.

(f) Observation of monitoring.

(i) Employee observation. The employer must provide affected employees or their designated representatives an opportunity to observe any monitoring of employee exposure to MC conducted in accordance with this section.

(ii) Observation procedures. When observation of the monitoring of employee exposure to MC requires entry into an area where the use of protective clothing or equipment is required, the employer must provide, at no cost to the observer(s), and the observer(s) must use such clothing and equipment and must comply with all other applicable safety and health procedures.

(5) **Regulated areas**.

(a) The employer must establish a regulated area wherever an employee's exposure to airborne concentrations of MC exceeds or can reasonably be expected to exceed either the 8-hour TWA PEL or the STEL.

(b) The employer must limit access to regulated areas to authorized persons.

(c) The employer must supply a respirator, selected in accordance with subsection (7)(c) of this section, to each person who enters a regulated area and must require each affected employee to use that respirator whenever MC exposures are likely to exceed the 8-hour TWA PEL or STEL.

(Note to subsection (5)(c) of this section: An employer who has implemented all feasible engineering, work-practice and administrative controls (as required in subsection (6) of this section), and who has established a regulated area (as required by subsection (5)(a) of this section) where MC exposure can be reliably predicted to exceed the 8-hour TWA PEL or the STEL only on certain days (for example, because of work or process schedule) would need to have affected employees use respirators in that regulated area only on those days.)

(d) The employer must ensure that, within a regulated area, employees do not engage in nonwork activities which may increase dermal or oral MC exposure.

(e) The employer must ensure that while employees are wearing respirators, they do not engage in activities (such as taking medication or chewing gum or tobacco) which interfere with respirator seal or performance.

(f) The employer must demarcate regulated areas from the rest of the workplace in any manner that adequately establishes and alerts employees to the boundaries of the area and minimizes the number of authorized employees exposed to MC within the regulated area.

(g) An employer at a multi-employer worksite who establishes a regulated area must communicate the access restrictions and locations of these areas to all other employers with work operations at that worksite.

(6) **Methods of compliance**.

(a) Engineering and work-practice controls. The employer must institute and maintain the effectiveness of engineering controls and work-practices to reduce employee exposure to or below the PELs except to the extent that the employer can demonstrate that such controls are not feasible.

(b) Wherever the feasible engineering controls and work-practices which can be instituted are not sufficient to reduce employee exposure to or below the 8-TWA PEL or STEL, the employer must use them to reduce employee exposure to the lowest levels achievable by these controls and must supplement them by the use of respiratory protection that complies with the requirements of subsection (7) of this section.

(c) Prohibition of rotation. The employer must not implement a schedule of employee rotation as a means of compliance with the PELs.

(d) Leak and spill detection.

(i) The employer must implement procedures to detect leaks of MC in the workplace. In work areas where spills may occur, the employer must make provisions to contain any spills and to safely dispose of any MC-contaminated waste materials.

(ii) The employer must ensure that all incidental leaks are repaired and that incidental spills are cleaned promptly by employees who use the appropriate personal protective equipment and are trained in proper methods of cleanup.

(Note to subsection (6)(d)(ii) of this section: See Appendix A of this section for examples of procedures that satisfy this requirement. Employers covered by this standard may also be subject to the hazardous waste and emergency response provisions contained in chapter 296-843 WAC.

(7) **Respiratory protection**.

(a) General requirements. For employees who use respirators required by this section, the employer must provide each employee an appropriate respirator that complies with the requirements of this subsection. Respirators must be used during:

(i) Periods when an employee's exposure to MC exceeds or can reasonably be expected to exceed the 8-hour TWA PEL or the STEL for example, when an employee is using MC in a regulated area);

(ii) Periods necessary to install or implement feasible engineering and work-practice controls;

(iii) In a few work operations, such as some maintenance operations and repair activities, for which the employer demonstrates that engineering and work-practice controls are infeasible;

(iv) Work operations for which feasible engineering and work-practice controls are not sufficient to reduce exposures to or below the PELs;

(v) Emergencies.

(b) Respirator program.

(i) The employer must develop, implement and maintain a respiratory protection program as required by chapter 296-842 WAC, Respirators, which covers each employee required by this chapter to use a respirator, except for the requirements in Table 5 of WAC 296-842-13005 that address gas or vapor cartridge change schedules and end-of-service-life indicators (ESLIs).

(ii) Employers who provide employees with gas masks with organic-vapor canisters for the purpose of emergency escape must replace the canisters after any emergency use and before the gas masks are returned to service.

(c) Respirator selection. The employer must:

(i) Select and provide to employees appropriate respirators according to this section and WAC 296-842 13005 found in the respirator rule.

(ii) Make sure half-facepiece respirators aren't selected or used for protection against MC. This is necessary to prevent eye irritation or damage from MC exposure.

(iii) Provide to employees, for emergency escape, one of the following respirator options:

(A) A self-contained breathing apparatus operated in the continuous-flow or pressure-demand mode.

(B) A gas mask equipped with an organic vapor canister.

(d) Medical evaluation. Before having an employee use a supplied-air respirator in the negative-pressure mode, or a gas mask with an organic-vapor canister for emergency escape, the employer must:

(i) Have a physician or other licensed health care professional (PLHCP) evaluate the employee's ability to use such respiratory protection;

(ii) Ensure that the PLHCP provides their findings in a written opinion to the employee and the employer.

Note: See WAC 296-842-14005 for medical evaluation requirements for employees using respirators.

(8) **Protective work clothing and equipment**.

(a) Where needed to prevent MC- induced skin or eye irritation, the employer must provide clean protective clothing and equipment which is resistant to MC, at no cost to the employee, and must ensure that each affected employee uses it. Eye and face protection shall meet the requirements of WAC 296-800-160, as applicable.

(b) The employer must clean, launder, repair and replace all protective clothing and equipment required by this subsection as needed to maintain their effectiveness.

(c) The employer must be responsible for the safe disposal of such clothing and equipment.

(Note to subsection (8)(c) of this section: See Appendix A for examples of disposal procedures that will satisfy this requirement.)

(9) **Hygiene facilities**.

(a) If it is reasonably foreseeable that employees' skin may contact solutions containing 0.1 percent or greater MC (for example, through splashes, spills or improper work-practices), the employer must provide conveniently located washing facilities capable of removing the MC, and must ensure that affected employees use these facilities as needed.

(b) If it is reasonably foreseeable that an employee's eyes may contact solutions containing 0.1 percent or greater MC (for example through splashes, spills or improper work-practices), the employer must provide appropriate eyewash facilities within the immediate work area for emergency use, and must ensure that affected employees use those facilities when necessary.

(10) **Medical surveillance**.

(a) Affected employees. The employer must make medical surveillance available for employees who are or may be exposed to MC as follows:

(i) At or above the action level on 30 or more days per year, or above the 8-hour TWA PEL or the STEL on 10 or more days per year;

(ii) Above the 8-TWA PEL or STEL for any time period where an employee has been identified by a physician or other licensed health care professional as being at risk from cardiac disease or from some other serious MC-related health condition and such employee requests inclusion in the medical surveillance program;

(iii) During an emergency.

(b) Costs. The employer must provide all required medical surveillance at no cost to affected employees, without loss of pay and at a reasonable time and place.

(c) Medical personnel. The employer must ensure that all medical surveillance procedures are performed by a physician or other licensed health care professional, as defined in subsection (2) of this section.

(d) Frequency of medical surveillance. The employer must make medical surveillance available to each affected employee as follows:

(i) Initial surveillance. The employer must provide initial medical surveillance under the schedule provided by subsection (14)(b)(iii) of this section, or before the time of initial assignment of the employee, whichever is later.

(ii) Periodic medical surveillance. The employer must update the medical and work history for each affected employee annually. The employer must provide periodic physical examinations, including appropriate laboratory surveillance, as follows:

(A) For employees 45 years of age or older, within 12 months of the initial surveillance or any subsequent medical surveillance; and

(B) For employees younger than 45 years of age, within 36 months of the initial surveillance or any subsequent medical surveillance.

(iii) Termination of employment or reassignment. When an employee leaves the employer's workplace, or is reassigned to an area where exposure to MC is consistently at or below the action level and STEL, medical surveillance must be made available if six months or more have elapsed since the last medical surveillance.

(iv) Additional surveillance. The employer must provide additional medical surveillance at frequencies other than those listed above when recommended in the written medical opinion. (For example, the physician or other licensed health care professional may determine an examination is warranted in less than 36 months for employees younger than 45 years of age based upon evaluation of the results of the annual medical and work history.)

(e) Content of medical surveillance.

(i) Medical and work history. The comprehensive medical and work history must emphasize neurological symptoms, skin conditions, history of hematologic or liver disease, signs or symptoms suggestive of heart disease (angina, coronary artery disease), risk factors for cardiac disease, MC exposures, and work-practices and personal protective equipment used during such exposures.

(Note to subsection (10)(e)(i) of this section: See Appendix B of this section for an example of a medical and work history format that would satisfy this requirement.)

(ii) Physical examination. Where physical examinations are provided as required above, the physician or other licensed health care professional must accord particular attention to the lungs, cardiovascular system (including blood pressure and pulse), liver, nervous system, and skin. The physician or other licensed health care professional must determine the extent and nature of the physical examination based on the health status of the employee and analysis of the medical and work history.

(iii) Laboratory surveillance. The physician or other licensed health care professional must determine the extent of any required laboratory surveillance based on the employee's observed health status and the medical and work history.

(Note to subsection (10)(e)(iii) of this section: See Appendix B of this section for information regarding medical tests. Laboratory surveillance may include before-and after-shift carboxyhemoglobin determinations, resting ECG, hematocrit, liver function tests and cholesterol levels.)

(iv) Other information or reports. The medical surveillance must also include any other information or reports the physician or other licensed health care professional determines are necessary to assess the employee's health in relation to MC exposure.

(f) Content of emergency medical surveillance. The employer must ensure that medical surveillance made available when an employee has been exposed to MC in emergency situations includes, at a minimum:

(i) Appropriate emergency treatment and decontamination of the exposed employee;

(ii) Comprehensive physical examination with special emphasis on the nervous system, cardiovascular system, lungs, liver and skin, including blood pressure and pulse;

(iii) Updated medical and work history, as appropriate for the medical condition of the employee; and

(iv) Laboratory surveillance, as indicated by the employee's health status.

(Note to subsection (10)(f)(iv) of this section: See Appendix B for examples of tests which may be appropriate.)

(g) Additional examinations and referrals. Where the physician or other licensed health care professional determines it is necessary, the scope of the medical examination must be expanded and the appropriate additional medical surveillance, such as referrals for consultation or examination, must be provided.

(h) Information provided to the physician or other licensed health care professional. The employer must provide the following information to a physician or other licensed health care professional who is involved in the diagnosis of MC-induced health effects:

(i) A copy of this section including its applicable appendices;

(ii) A description of the affected employee's past, current and anticipated future duties as they relate to the employee's MC exposure;

(iii) The employee's former or current exposure levels or, for employees not yet occupationally exposed to MC, the employee's anticipated exposure levels and the frequency and exposure levels anticipated to be associated with emergencies;

(iv) A description of any personal protective equipment, such as respirators, used or to be used; and

(v) Information from previous employment-related medical surveillance of the affected employee which is not otherwise available to the physician or other licensed health care professional.

(i) Written medical opinions.

(i) For each physical examination required by this section, the employer must ensure that the physician or other licensed health care professional provides to the employer and to the affected employee a written opinion regarding the results of that examination within 15 days of completion of the evaluation of medical and laboratory findings, but not more than 30 days after the examination. The written medical opinion must be limited to the following information:

(A) The physician's or other licensed health care professional's opinion concerning whether exposure to MC may contribute to or aggravate the employee's existing cardiac, hepatic, neurological (including stroke) or dermal disease or whether the employee has any other medical conditions(s) that would place the employee's health at increased risk of material impairment from exposure to MC;

(B) Any recommended limitations upon the employee's exposure to MC, removal from MC exposure, or upon the employee's use of protective clothing or equipment and respirators;

(C) A statement that the employee has been informed by the physician or other licensed health care professional that MC is a potential occupational carcinogen, of risk factors for heart disease, and the potential for exacerbation of underlying heart disease by exposure to MC through its metabolism to carbon monoxide; and

(D) A statement that the employee has been informed by the physician or other licensed health care professional of the results of the medical examination and any medical conditions resulting from MC exposure which require further explanation or treatment.

(ii) The employer must instruct the physician or other licensed health care professional not to reveal to the employer, orally or in the written opinion, any specific records, findings, and diagnoses that have no bearing on occupational exposure to MC.

(Note to subsection (10)(h)(ii) of this section: The written medical opinion may also include information and opinions generated to comply with other OSHA health standards.)

(j) Medical presumption. For purposes of this subsection (10), the physician or other licensed health care professional must presume, unless medical evidence indicates to the contrary, that a medical condition is unlikely to require medical removal from MC exposure if the employee is not exposed to MC above the 8-hour TWA PEL. If the physician or other licensed health care professional recommends removal for an employee exposed below the 8-hour TWA PEL, the physician or other licensed health care professional must cite specific medical evidence, sufficient to rebut the presumption that exposure below the 8-hour TWA PEL is unlikely to require removal, to support the recommendation. If such evidence is cited by the physician or other licensed health care professional, the employer must remove the employee. If such evidence is not cited by the physician or other licensed health care professional, the employer is not required to remove the employee.

(k) Medical removal protection (MRP).

(i) Temporary medical removal and return of an employee.

(A) Except as provided in (j) of this subsection, when a medical determination recommends removal because the employee's exposure to MC may contribute to or aggravate the employee's existing cardiac, hepatic, neurological (including stroke), or skin disease, the employer must provide medical removal protection benefits to the employee and either:

(I) Transfer the employee to comparable work where methylene chloride exposure is below the action level; or

(II) Remove the employee from MC exposure.

(B) If comparable work is not available and the employer is able to demonstrate that removal and the costs of extending MRP benefits to an additional employee, considering feasibility in relation to the size of the employer's business and the other requirements of this standard, make further reliance on MRP an inappropriate remedy, the employer may retain the additional employee in the existing job until transfer or removal becomes appropriate, provided:

(I) The employer ensures that the employee receives additional medical surveillance, including a physical examination at least every 60 days until transfer or removal occurs; and

(II) The employer or PLHCP informs the employee of the risk to the employee's health from continued MC exposure.

(C) The employer must maintain in effect any job-related protective measures or limitations, other than removal, for as long as a medical determination recommends them to be necessary.

(ii) End of MRP benefits and return of the employee to former job status.

(A) The employer may cease providing MRP benefits at the earliest of the following:

(I) Six months;

(II) Return of the employee to the employee's former job status following receipt of a medical determination concluding that the employee's exposure to MC no longer will aggravate any cardiac, hepatic, neurological (including stroke), or dermal disease;

(III) Receipt of a medical determination concluding that the employee can never return to MC exposure.

(B) For the purposes of this subsection (10), the requirement that an employer return an employee to the employee's former job status is not intended to expand upon or restrict any rights an employee has or would have had, absent temporary medical removal, to a specific job classification or position under the terms of a collective bargaining agreement.

(l) Medical removal protection benefits.

(i) For purposes of this subsection (10), the term medical removal protection benefits means that, for each removal, an employer must maintain for up to six months the earnings, seniority, and other employment rights and benefits of the employee as though the employee had not been removed from MC exposure or transferred to a comparable job.

(ii) During the period of time that an employee is removed from exposure to MC, the employer may condition the provision of medical removal protection benefits upon the employee's participation in follow-up medical surveillance made available pursuant to this section.

(iii) If a removed employee files a workers' compensation claim for a MC-related disability, the employer must continue the MRP benefits required by this section until either the claim is resolved or the 6-month period for payment of MRP benefits has passed, whichever occurs first. To the extent the employee is entitled to indemnity payments for earnings lost during the period of removal, the employer's obligation to provide medical removal protection benefits to the employee must be reduced by the amount of such indemnity payments.

(iv) The employer's obligation to provide medical removal protection benefits to a removed employee must be reduced to the extent that the employee receives compensation for earnings lost during the period of removal from either a publicly or an employer-funded compensation program, or receives income from employment with another employer made possible by virtue of the employee's removal.

(m) Voluntary removal or restriction of an employee. Where an employer, although not required by this section to do so, removes an employee from exposure to MC or otherwise places any limitation on an employee due to the effects of MC exposure on the employee's medical condition, the employer must provide medical removal protection benefits to the employee equal to those required by (l) of this subsection.

(n) Multiple health care professional review mechanism.

(i) If the employer selects the initial physician or licensed health care professional (PLHCP) to conduct any medical examination or consultation provided to an employee under (k) of this subsection, the employer must notify the employee of the right to seek a second medical opinion each time the employer provides the employee with a copy of the written opinion of that PLHCP.

(ii) If the employee does not agree with the opinion of the employer-selected PLHCP, notifies the employer of that fact, and takes steps to make an appointment with a second PLHCP within 15 days of receiving a copy of the written opinion of the initial PLHCP, the employer must pay for the PLHCP chosen by the employee to perform at least the following:

(A) Review any findings, determinations or recommendations of the initial PLHCP; and

(B) Conduct such examinations, consultations, and laboratory tests as the PLHCP deems necessary to facilitate this review.

(iii) If the findings, determinations or recommendations of the second PLHCP differ from those of the initial PLHCP, then the employer and the employee must instruct the two health care professionals to resolve the disagreement.

(iv) If the two health care professionals are unable to resolve their disagreement within 15 days, then those two health care professionals must jointly designate a PLHCP who is a specialist in the field at issue. The employer must pay for the specialist to perform at least the following:

(A) Review the findings, determinations, and recommendations of the first two PLHCPs; and

(B) Conduct such examinations, consultations, laboratory tests and discussions with the prior PLHCPs as the specialist deems necessary to resolve the disagreements of the prior health care professionals.

(v) The written opinion of the specialist must be the definitive medical determination. The employer must act consistent with the definitive medical determination, unless the employer and employee agree that the written opinion of one of the other two PLHCPs must be the definitive medical determination.

(vi) The employer and the employee or authorized employee representative may agree upon the use of any expeditious alternate health care professional determination mechanism in lieu of the multiple health care professional review mechanism provided by this section so long as the alternate mechanism otherwise satisfies the requirements contained in this section.

(11) **Hazard communication-General**.

(a) Chemical manufacturers, importers, distributors, and employers must comply with all requirements of the Hazard Communication Standard (HCS), WAC 296-901-140 for MC.

(b) In classifying the hazards of MC at least the following hazards are to be addressed: Cancer, cardiac effects (including elevation of carboxyhemoglobin), central nervous system effects, liver effects, and skin and eye irritation.

(c) Employers must include MC in the hazard communication program established to comply with the HCS, WAC 296-901-140. Employers must ensure that each employee has access to labels on containers of MC and to safety data sheets, and is trained in accordance with the requirements of HCS and subsection (12) of this section.

(12) **Employee information and training**.

(a) The employer must provide information and training for each affected employee prior to or at the time of initial assignment to a job involving potential exposure to MC.

(b) The employer must ensure that information and training is presented in a manner that is understandable to the employees.

(c) In addition to the information required under the Hazard Communication Standard at WAC 296-901-140:

(i) The employer must inform each affected employee of the requirements of this section and information available in its appendices, as well as how to access or obtain a copy of it in the workplace;

(ii) Wherever an employee's exposure to airborne concentrations of MC exceeds or can reasonably be expected to exceed the action level, the employer must inform each affected employee of the quantity, location, manner of use, release, and storage of MC and the specific operations in the workplace that could result in exposure to MC, particularly noting where exposures may be above the 8-hour TWA PEL or STEL;

(d) The employer must train each affected employee as required under the Hazard Communication Standard at WAC 296-901-140, as appropriate.

(e) The employer must retrain each affected employee as necessary to ensure that each employee exposed above the action level or the STEL maintains the requisite understanding of the principles of safe use and handling of MC in the workplace.

(f) Whenever there are workplace changes, such as modifications of tasks or procedures or the institution of new tasks or procedures, which increase employee exposure, and where those exposures exceed or can reasonably be expected to exceed the action level, the employer must update the training as necessary to ensure that each affected employee has the requisite proficiency.

(g) An employer whose employees are exposed to MC at a multi-employer worksite must notify the other employers with work operations at that site in accordance with the requirements of the Hazard Communication Standard, WAC 296-901-140, as appropriate.

(h) The employer must provide to the director, upon request, all available materials relating to employee information and training.

(13) **Recordkeeping**.

(a) Objective data.

(i) Where an employer seeks to demonstrate that initial monitoring is unnecessary through reasonable reliance on objective data showing that any materials in the workplace containing MC will not release MC at levels which exceed the action level or the STEL under foreseeable conditions of exposure, the employer must establish and maintain an accurate record of the objective data relied upon in support of the exemption.

(ii) This record must include at least the following information:

(A) The MC-containing material in question;

(B) The source of the objective data;

(C) The testing protocol, results of testing, and/or analysis of the material for the release of MC;

(D) A description of the operation exempted under subsection (4)(b)(i) of this section and how the data support the exemption; and

(E) Other data relevant to the operations, materials, processing, or employee exposures covered by the exemption.

(iii) The employer must maintain this record for the duration of the employer's reliance upon such objective data.

(b) Exposure measurements.

(i) The employer must establish and keep an accurate record of all measurements taken to monitor employee exposure to MC as prescribed in subsection (4) of this section.

(ii) Where the employer has 20 or more employees, this record must include at least the following information:

(A) The date of measurement for each sample taken;

(B) The operation involving exposure to MC which is being monitored;

(C) Sampling and analytical methods used and evidence of their accuracy;

(D) Number, duration, and results of samples taken;

(E) Type of personal protective equipment, such as respiratory protective devices, worn, if any; and

(F) Name, Social Security number, job classification and exposure of all of the employees represented by monitoring, indicating which employees were actually monitored.

(iii) Where the employer has fewer than 20 employees, the record must include at least the following information:

(A) The date of measurement for each sample taken;

(B) Number, duration, and results of samples taken; and

(C) Name, Social Security number, job classification and exposure of all of the employees represented by monitoring, indicating which employees were actually monitored.

(iv) The employer must maintain this record for at least thirty (30) years, in accordance with chapter 296-802 WAC.

(c) Medical surveillance.

(i) The employer must establish and maintain an accurate record for each employee subject to medical surveillance under subsection (10) of this section.

(ii) The record must include at least the following information:

(A) The name, Social Security number and description of the duties of the employee;

(B) Written medical opinions; and

(C) Any employee medical conditions related to exposure to MC.

(iii) The employer must ensure that this record is maintained for the duration of employment plus thirty (30) years, in accordance with chapter 296-802 WAC.

(d) Availability.

(i) The employer, upon written request, must make all records required to be maintained by this section available to the director for examination and copying in accordance with chapter 296-802 WAC.

(Note to subsection (13)(d)(i) of this section: All records required to be maintained by this section may be kept in the most administratively convenient form (for example, electronic or computer records would satisfy this requirement).)

(ii) The employer, upon request, must make any employee exposure and objective data records required by this section available for examination and copying by affected employees, former employees, and designated representatives in accordance with chapter 296-802 WAC.

(iii) The employer, upon request, must make employee medical records required to be kept by this section available for examination and copying by the subject employee and by anyone having the specific written consent of the subject employee in accordance with chapter 296-802 WAC.

(e) Transfer of records. The employer must comply with the requirements concerning transfer of records set forth in WAC 296-802-600 Transfer and disposal of employee records.

(14) **Dates**.

(a) Engineering controls required under subsection (6)(a) of this section must be implemented according to the following schedule:

(i) For employers with fewer than 20 employees, no later than April 10, 2000.

(ii) For employers with fewer than 150 employees engaged in foam fabrication; for employers with fewer than 50 employees engaged in furniture refinishing, general aviation aircraft stripping, and product formulation; for employers with fewer than 50 employees using MC-based adhesives for boat building and repair, recreational vehicle manufacture, van conversion, and upholstering; for employers with fewer than 50 employees using MC in construction work for restoration and preservation of buildings, painting and paint removal, cabinet making and/or floor refinishing and resurfacing, no later than April 10, 2000.

(iii) For employers engaged in polyurethane foam manufacturing with 20 or more employees, no later than October 10, 1999.

(b) Use of respiratory protection whenever an employee's exposure to MC exceeds or can reasonably be expected to exceed the 8-hour TWA PEL, in accordance with subsection (3)(a), (5)(c), (6)(a) and (7)(a) of this section, must be implemented according to the following schedule:

(i) For employers with fewer than 150 employees engaged in foam fabrication; for employers with fewer than 50 employees engaged in furniture refinishing, general aviation aircraft stripping, and product formulation; for employers with fewer than 50 employees using MC-based adhesives for boat building and repair, recreational vehicle manufacture, van conversion, and upholstering; for employers with fewer than 50 employees using MC in construction work for restoration and preservation of buildings, painting and paint removal, cabinet making and/or floor refinishing and resurfacing, no later than April 10, 2000.

(ii) For employers engaged in polyurethane foam manufacturing with 20 or more employees, no later than October 10, 1999.

(c) Notification of corrective action under subsection (4)(e)(ii) of this section, no later than 90 days before the compliance date applicable to such corrective action.

(d) Transitional dates. The exposure limits for MC specified in WAC 296-307-62610 Table 1, must remain in effect until the start-up dates for the exposure limits specified in subsection (14) of this section, or if the exposure limits in this section are stayed or vacated.

(e) Unless otherwise specified in this subsection, all other requirements of this section must be complied with immediately.

(15) **Appendices**. The information contained in the appendices does not, by itself, create any additional obligations not otherwise imposed or detract from any existing obligation.

WAC 296-62-07473 Appendix A. Substance Safety Data Sheet and Technical Guidelines for Methylene Chloride

I. **Substance Identification**

A. Substance: Methylene chloride (CH_2Cl_2).

B. Synonyms: MC, Dichloromethane (DCM); Methylene dichloride; Methylene bichloride; Methane dichloride; CAS: 75-09-2; NCI-C50102.

C. Physical data:

1. Molecular weight: 84.9.
2. Boiling point (760 mm Hg): 39.8 deg.C (104 deg.F).
3. Specific gravity (water = 1): 1.3.
4. Vapor density (air = 1 at boiling point): 2.9.
5. Vapor pressure at 20 deg. C (68 deg. F): 350 mm Hg.
6. Solubility in water, g/100 g water at 20 deg. C (68 deg. F) = 1.32.
7. Appearance and odor: colorless liquid with a chloroform-like odor.

D. Uses: MC is used as a solvent, especially where high volatility is required. It is a good solvent for oils, fats, waxes, resins, bitumen, rubber and cellulose acetate and is a useful paint stripper and degreaser. It is used in paint removers, in propellant mixtures for aerosol containers, as a solvent for plastics, as a degreasing agent, as an extracting agent in the pharmaceutical industry and as a blowing agent in polyurethane foams. Its solvent property is sometimes increased by mixing with methanol, petroleum naphtha or tetrachloroethylene.

E. Appearance and odor: MC is a clear colorless liquid with a chloroform-like odor. It is slightly soluble in water and completely miscible with most organic solvents.

F. Permissible exposure: Exposure may not exceed 25 parts MC per million parts of air (25 ppm) as an eight-hour time-weighted average (8-hour TWA PEL) or 125 parts of MC per million parts of air (125 ppm) averaged over a 15-minute period (STEL).

II. **Health Hazard Data**

A. MC can affect the body if it is inhaled or if the liquid comes in contact with the eyes or skin. It can also affect the body if it is swallowed.

B. Effects of overexposure:

1. Short-term Exposure: MC is an anesthetic. Inhaling the vapor may cause mental confusion, light- headedness, nausea, vomiting, and headache. Continued exposure may cause increased light-headedness, staggering, unconsciousness, and even death. High vapor concentrations may also cause irritation of the eyes and respiratory tract. Exposure to MC may make the symptoms of angina (chest pains) worse. Skin exposure to liquid MC may cause irritation. If liquid MC remains on the skin, it may cause skin burns. Splashes of the liquid into the eyes may cause irritation.

2. Long-term (chronic) exposure: The best evidence that MC causes cancer is from laboratory studies in which rats, mice and hamsters inhaled MC 6 hours per day, 5 days per week for 2 years. MC exposure produced lung and liver tumors in mice and mammary tumors in rats. No carcinogenic effects of MC were found in hamsters. There are also some human epidemiological studies which show an association between occupational exposure to MC and increases in biliary (bile duct) cancer and a type of brain cancer. Other epidemiological studies have not observed a relationship between MC exposure and cancer. WISHA interprets these results to mean that there is suggestive (but not absolute) evidence that MC is a human carcinogen.

C. Reporting signs and symptoms: You should inform your employer if you develop any signs or symptoms and suspect that they are caused by exposure to MC.

D. Warning Properties:

1. Odor Threshold: Different authors have reported varying odor thresholds for MC. Kirk-Othmer and Sax both reported 25 to 50 ppm; Summer and May both reported 150 ppm; Spector reports 320 ppm. Patty, however, states that since one can become adapted to the odor, MC should not be considered to have adequate warning properties.

2. Eye Irritation Level: Kirk-Othmer reports that "MC vapor is seriously damaging to the eyes." Sax agrees with Kirk-Othmer's statement. The ACGIH Documentation of TLVs states that irritation of the eyes has been observed in workers exposed to concentrations up to 5000 ppm.

3. Evaluation of Warning Properties: Since a wide range of MC odor thresholds are reported (25-320 ppm), and human adaptation to the odor occurs, MC is considered to be a material with poor warning properties.

III. Emergency First Aid Procedures

In the event of emergency, institute first aid procedures and send for first aid or medical assistance.

A. Eye and Skin Exposures: If there is a potential for liquid MC to come in contact with eye or skin, face shields and skin protective equipment must be provided and used. If liquid MC comes in contact with the eye, get medical attention. Contact lenses should not be worn when working with this chemical.

B. Breathing: If a person breathes in large amounts of MC, move the exposed person to fresh air at once. If breathing has stopped, perform cardiopulmonary resuscitation. Keep the affected person warm and at rest. Get medical attention as soon as possible.

C. Rescue: Move the affected person from the hazardous exposure immediately. If the exposed person has been overcome, notify someone else and put into effect the established emergency rescue procedures. Understand the facility's emergency rescue procedures and know the locations of rescue equipment before the need arises. Do not become a casualty yourself.

IV. Respirators, Protective Clothing, and Eye Protection

A. Respirators: Good industrial hygiene practices recommend that engineering controls be used to reduce environmental concentrations to the permissible exposure level. However, there are some exceptions where respirators may be used to control exposure. Respirators may be used when engineering and work-practice controls are not feasible, when such controls are in the process of being installed, or when these controls fail and need to be supplemented. Respirators may also be used for operations which require entry into tanks or closed vessels, and in emergency situations. If the use of respirators is necessary, the only respirators permitted are those that have been approved by the National Institute for Occupational Safety and Health (NIOSH). Supplied-air respirators are required because air-purifying respirators do not provide adequate respiratory protection against MC. In addition to respirator selection, a complete written respiratory protection program should be instituted which includes regular training, maintenance, inspection, cleaning, and evaluation. If you can smell MC while wearing a respirator, proceed immediately to fresh air. If you experience difficulty in breathing while wearing a respirator, tell your employer.

B. Protective Clothing: Employees must be provided with and required to use impervious clothing, gloves, face shields (eight-inch minimum), and other appropriate protective clothing necessary to prevent repeated or prolonged skin contact with liquid MC or contact with vessels containing liquid MC. Any clothing which becomes wet with liquid MC should be removed immediately and not reworn until the employer has ensured that the protective clothing is fit for reuse. Contaminated protective clothing should be placed in a regulated area designated by the employer for removal of MC before the clothing is laundered or disposed of. Clothing and equipment should remain in the regulated area until all of the MC contamination has evaporated; clothing and equipment should then be laundered or disposed of as appropriate.

C. Eye Protection: Employees should be provided with and required to use splash-proof safety goggles where liquid MC may contact the eyes.

V. Housekeeping and Hygiene Facilities

For purposes of complying with WAC 296-800-220 and 296-800-230, the following items should be emphasized:

A. The workplace should be kept clean, orderly, and in a sanitary condition. The employer should institute a leak and spill detection program for operations involving liquid MC in order to detect sources of fugitive MC emissions.

B. Emergency drench showers and eyewash facilities are recommended. These should be maintained in a sanitary condition. Suitable cleansing agents should also be provided to assure the effective removal of MC from the skin.

C. Because of the hazardous nature of MC, contaminated protective clothing should be placed in a regulated area designated by the employer for removal of MC before the clothing is laundered or disposed of.

VI. Precautions for Safe Use, Handling, and Storage

A. Fire and Explosion Hazards: MC has no flash point in a conventional closed tester, but it forms flammable vapor-air mixtures at approximately 100 deg. C (212 deg.F), or higher. It has a lower explosion limit of 12%, and an upper explosion limit of 19% in air. It has an autoignition temperature of 556.1 deg. C (1033 deg. F), and a boiling point of 39.8 deg. C (104 deg.F). It is heavier than water with a specific gravity of 1.3. It is slightly soluble in water.

B. Reactivity Hazards: Conditions contributing to the instability of MC are heat and moisture. Contact with strong oxidizers, caustics, and chemically active metals such as aluminum or magnesium powder, sodium and potassium may cause fires and explosions. Special precautions: Liquid MC will attack some forms of plastics, rubber, and coatings.

C. Toxicity: Liquid MC is painful and irritating if splashed in the eyes or if confined on the skin by gloves, clothing, or shoes. Vapors in high concentrations may cause narcosis and death. Prolonged exposure to vapors may cause cancer or exacerbate cardiac disease.

D. Storage: Protect against physical damage. Because of its corrosive properties, and its high vapor pressure, MC should be stored in plain, galvanized or lead lined, mild steel containers in a cool, dry, well-ventilated area away from direct sunlight, heat source and acute fire hazards.

E. Piping Material: All piping and valves at the loading or unloading station should be of material that is resistant to MC and should be carefully inspected prior to connection to the transport vehicle and periodically during the operation.

F. Usual Shipping Containers: Glass bottles, 5- and 55-gallon steel drums, tank cars, and tank trucks.

> *Note* *This section addresses MC exposure in marine terminal and longshore employment only where leaking or broken packages allow MC exposure that is not addressed through compliance with WAC* 296-56.

G. Electrical Equipment: Electrical installations in Class I hazardous locations as defined in Article 500 of the National Electrical Code, should be installed according to Article 501 of the code; and electrical equipment should be suitable for use in atmospheres containing MC vapors. See Flammable and Combustible Liquids Code (NFPA No. 325M), Chemical Safety Data Sheet SD-86 (Manufacturing Chemists' Association, Inc.).

H. Firefighting: When involved in fire, MC emits highly toxic and irritating fumes such as phosgene, hydrogen chloride and carbon monoxide. Wear breathing apparatus and use water spray to keep fire-exposed containers cool. Water spray may be used to flush spills away from exposures. Extinguishing media are dry chemical, carbon dioxide, foam. For purposes of compliance with WAC 296-24-957, locations classified as hazardous due to the presence of MC shall be Class I.

I. Spills and Leaks: Persons not wearing protective equipment and clothing should be restricted from areas of spills or leaks until cleanup has been completed. If MC has spilled or leaked, the following steps should be taken:

1. Remove all ignition sources.
2. Ventilate area of spill or leak.
3. Collect for reclamation or absorb in vermiculite, dry sand, earth, or a similar material.

J. Methods of Waste Disposal: Small spills should be absorbed onto sand and taken to a safe area for atmospheric evaporation. Incineration is the preferred method for disposal of large quantities by mixing with a combustible solvent and spraying into an incinerator equipped with acid scrubbers to remove hydrogen chloride gases formed. Complete combustion will convert carbon monoxide to carbon dioxide. Care should be taken for the presence of phosgene.

K. You should not keep food, beverage, or smoking materials, or eat or smoke in regulated areas where MC concentrations are above the permissible exposure limits.

L. Portable heating units should not be used in confined areas where MC is used.

M. Ask your supervisor where MC is used in your work area and for any additional plant safety and health rules.

VII. Medical Requirements

Your employer is required to offer you the opportunity to participate in a medical surveillance program if you are exposed to MC at concentrations at or above the action level (12.5 ppm 8-hour TWA) for more than 30 days a year or at concentrations exceeding the PELs (25 ppm 8-hour TWA or 125 ppm 15-minute STEL) for more than 10 days a year. If you are exposed to MC at concentrations over either of the PELs, your employer will also be required to have a physician or other licensed health care professional ensure that you are able to wear the respirator that you are assigned. Your employer must provide all medical examinations relating to your MC exposure at a reasonable time and place and at no cost to you.

VIII. Monitoring and Measurement Procedures

A. Exposure above the Permissible Exposure Limit:

1. Eight-hour exposure evaluation: Measurements taken for the purpose of determining employee exposure under this section are best taken with consecutive samples covering the full shift. Air samples must be taken in the employee's breathing zone.

2. Monitoring techniques: The sampling and analysis under this section may be performed by collection of the MC vapor on two charcoal adsorption tubes in series or other composition adsorption tubes, with subsequent chemical analysis. Sampling and analysis may also be performed by instruments such as real-time continuous monitoring systems, portable direct reading instruments, or passive dosimeters as long as measurements taken using these methods accurately evaluate the concentration of MC in employees' breathing zones. OSHA method 80 is an example of a validated method of sampling and analysis of MC. Copies of this method are available from OSHA or can be downloaded from the Internet at http://www.osha.gov. The employer has the obligation of selecting a monitoring method which meets the accuracy and precision requirements of the standard under their unique field conditions. The standard requires that the method of monitoring must be accurate, to a 95 percent confidence level, to plus or minus 25 percent for concentrations of MC at or above 25 ppm, and to plus or minus 35 percent for concentrations at or below 25 ppm. In addition to OSHA method 80, there are numerous other methods available for monitoring for MC in the workplace.

B. Since many of the duties relating to employee exposure are dependent on the results of measurement procedures, employers must assure that the evaluation of employee exposure is performed by a technically qualified person.

IX. Observation of Monitoring

Your employer is required to perform measurements that are representative of your exposure to MC and you or your designated representative are entitled to observe the monitoring procedure. You are entitled to observe the steps taken in the measurement procedure, and to record the results obtained. When the monitoring procedure is taking place in an area where respirators or personal protective clothing and equipment are required to be worn, you or your representative must also be provided with, and must wear, protective clothing and equipment.

Access To Information

A. Your employer is required to inform you of the information contained in this Appendix. In addition, your employer must instruct you in the proper work-practices for using MC, emergency procedures, and the correct use of protective equipment.

B. Your employer is required to determine whether you are being exposed to MC. You or your representative has the right to observe employee measurements and to record the results obtained. Your employer is required to inform you of your exposure. If your employer determines that you are being over exposed, he or she is required to inform you of the actions which are being taken to reduce your exposure to within permissible exposure limits.

C. Your employer is required to keep records of your exposures and medical examinations. These records must be kept by the employer for at least thirty (30) years.

D. Your employer is required to release your exposure and medical records to you or your representative upon your request.

E. Your employer is required to provide labels and safety data sheets (SDS) for all materials, mixtures or solutions composed of greater than 0.1 percent MC. These materials, mixtures or solutions would be classified and labeled in accordance with WAC 296-901-140.

X. **Common Operations and Controls**

The following list includes some common operations in which exposure to MC may occur and control methods which may be effective in each case:

Operations	*Controls*
Use as solvent in paint and varnish removers cold cleaning and ultrasonic cleaning, and as a solvent in furniture stripping.	General dilution ventilation; local; manufacture of aerosols; cold cleaning exhaust ventilation; personal protective equipment; substitution.
Use as solvent in vapor degreasing.	Process enclosure; local exhaust ventilation, chilling coils; substitution
Use as a secondary refrigerant in air. Scientific testing.	General dilution ventilation; local conditioning and exhaust ventilation; personal protective equipment.

WAC 296-62-07475 Appendix B. Medical Surveillance for Methylene Chloride

I. Primary Route of Entry Inhalation.

II. Toxicology.

Methylene Chloride (MC) is primarily an inhalation hazard. The principal acute hazardous effects are the depressant action on the central nervous system, possible cardiac toxicity and possible liver toxicity. The range of CNS effects are from decreased eye/hand coordination and decreased performance in vigilance tasks to narcosis and even death of individuals exposed at very high doses. Cardiac toxicity is due to the metabolism of MC to carbon monoxide, and the effects of carbon monoxide on heart tissue. Carbon monoxide displaces oxygen in the blood, decreases the oxygen available to heart tissue, increasing the risk of damage to the heart, which may result in heart attacks in susceptible individuals. Susceptible individuals include persons with heart disease and those with risk factors for heart disease. Elevated liver enzymes and irritation to the respiratory passages and eyes have also been reported for both humans and experimental animals exposed to MC vapors.

MC is metabolized to carbon monoxide and carbon dioxide via two separate pathways. Through the first pathway, MC is metabolized to carbon monoxide as an end-product via the P-450 mixed function oxidase pathway located in the microsomal fraction of the cell. This biotransformation of MC to carbon monoxide occurs through the process of microsomal oxidative dechlorination which takes place primarily in the liver. The amount of conversion to carbon monoxide is significant as measured by the concentration of carboxyhemoglobin, up to 12% measured in the blood following occupational exposure of up to 610 ppm.

Through the second pathway, MC is metabolized to carbon dioxide as an end product (with formaldehyde and formic acid as metabolic intermediates) via the glutathione dependent enzyme found in the cytosolic fraction of the liver cell. Metabolites along this pathway are believed to be associated with the carcinogenic activity of MC.

MC has been tested for carcinogenicity in several laboratory rodents. These rodent studies indicate that there is clear evidence that MC is carcinogenic to male and female mice and female rats. Based on epidemiologic studies, OSHA has concluded that there is suggestive evidence of increased cancer risk in MC-related worker populations. The epidemiological evidence is consistent with the finding of excess cancer in the experimental animal studies. NIOSH regards MC as a potential occupational carcinogen and the International Agency for Research Cancer (IARC) classifies MC as an animal carcinogen. OSHA considers MC as a suspected human carcinogen.

III. Medical Signs and Symptoms of Acute Exposure

Skin exposure to liquid MC may cause irritation or skin burns. Liquid MC can also be irritating to the eyes. MC is also absorbed through the skin and may contribute to the MC exposure by inhalation. At high concentrations in air, MC may cause nausea, vomiting, light- headedness, numbness of the extremities, changes in blood enzyme levels, and breathing problems, leading to bronchitis and pulmonary edema, unconsciousness and even death.

At lower concentrations in air, MC may cause irritation to the skin, eye, and respiratory tract and occasionally headache and nausea. Perhaps the greatest problem from exposure to low concentrations of MC is the CNS effects on coordination and alertness that may cause unsafe operations of machinery and equipment, leading to self-injury or accidents. Low levels and short duration exposures do not seem to produce permanent disability, but chronic exposures to MC have been demonstrated to produce liver toxicity in animals, and therefore, the evidence is suggestive for liver toxicity in humans after chronic exposure. Chronic exposure to MC may also cause cancer.

IV. Surveillance and Preventive Considerations

As discussed above, MC is classified as a suspect or potential human carcinogen. It is a central nervous system (CNS) depressant and a skin, eye and respiratory tract irritant. At extremely high concentrations, MC has caused liver damage in animals. MC principally affects the CNS, where it acts as a narcotic. The observation of the symptoms characteristic of CNS depression, along with a physical examination, provides the best detection of early neurological disorders. Since exposure to MC also increases the carboxyhemoglobin level in the blood, ambient carbon monoxide levels would have an additive effect on that carboxyhemoglobin level. Based on such information, a periodic post- shift carboxyhemoglobin test as an index of the presence of carbon monoxide in the blood is recommended, but not required, for medical surveillance.

Based on the animal evidence and three epidemiologic studies previously mentioned, OSHA concludes that MC is a suspect human carcinogen. The medical surveillance program is designed to observe exposed workers on a regular basis. While the medical surveillance program cannot detect MC-induced cancer at a preneoplastic stage, OSHA anticipates that, as in the past, early detection and treatments of cancers leading to enhanced survival rates will continue to evolve.

A. Medical and Occupational History:

The medical and occupational work history plays an important role in the initial evaluation of workers exposed to MC. It is therefore extremely important for the examining physician or other licensed health care professional to evaluate the MC-exposed worker carefully and completely and to focus the examination on MC's potentially associated health hazards. The medical evaluation must include an annual detailed work and medical history with special emphasis on cardiac history and neurological symptoms.

An important goal of the medical history is to elicit information from the worker regarding potential signs or symptoms associated with increased levels of carboxyhemoglobin due to the presence of carbon monoxide in the blood. Physicians or other licensed health care professionals should ensure that the smoking history of all MC exposed employees is known. Exposure to MC may cause a significant increase in carboxyhemoglobin level in all exposed persons. However, smokers as well as workers with anemia or heart disease and those concurrently exposed to carbon monoxide are at especially high risk of toxic effects because of an already reduced oxygen carrying capacity of the blood.

A comprehensive or interim medical and work history should also include occurrence of headache, dizziness, fatigue, chest pain, shortness of breath, pain in the limbs, and irritation of the skin and eyes. In addition, it is important for the physician or other licensed health care professional to become familiar with the operating conditions in which exposure to MC is likely to occur. The physician or other licensed health care professional also must become familiar with the signs and symptoms that may indicate that a worker is receiving otherwise unrecognized and exceptionally high exposure levels of MC.

An example of a medical and work history that would satisfy the requirement for a comprehensive or interim work history is represented by the following:

The following is a list of recommended questions and issues for the self- administered questionnaire for methylene chloride exposure.

Questionnaire For Methylene Chloride Exposure

I. **Demographic Information**

1. Name_____
2. Social Security Number_____
3. Date _____
4. Date of Birth_____
5. Age _____
6. Present occupation_____
7. Sex _____
8. Race _____

II. Occupational History

1. Have you ever worked with methylene chloride, dichloromethane, methylene dichloride, or CH_2Cl_2 (all are different names for the same chemical)? Please list which on the occupational history form if you have not already.
2. If you have worked in any of the following industries and have not listed them on the occupational history form, please do so.

Furniture stripping_____

Polyurethane foam manufacturing_____

Chemical manufacturing or formulation_____

Pharmaceutical manufacturing_____

Any industry in which you used solvents to clean and degrease equipment or parts.

Construction, especially painting and refinishing_____

Aerosol manufacturing_____

Any industry in which you used aerosol adhesives_____

3. If you have not listed hobbies or household projects on the occupational history form, especially furniture refinishing, spray painting, or paint stripping, please do so.

III. **Medical History**

A. **General**

1. Do you consider yourself to be in good health? If no, state reason(s).
2. Do you or have you ever had:
   a. Persistent thirst
   b. Frequent urination (three times or more at night)
   c. Dermatitis or irritated skin
   d. Nonhealing wounds

3. What prescription or nonprescription medications do you take, and for what reasons?

4. Are you allergic to any medications, and what type of reaction do you have?

B. **Respiratory**

1. Do you have or have you ever had any chest illnesses or diseases? Explain.

2. Do you have or have you ever had any of the following:

   a. Asthma

   b. Wheezing

   c. Shortness of breath

3. Have you ever had an abnormal chest X-ray? If so, when, where, and what were the findings?

4. Have you ever had difficulty using a respirator or breathing apparatus? Explain.

5. Do any chest or lung diseases run in your family? Explain.

6. Have you ever smoked cigarettes, cigars, or a pipe? Age started:

7. Do you now smoke?

8. If you have stopped smoking completely, how old were you when you stopped?

9. On the average of the entire time you smoked, how many packs of cigarettes, cigars, or bowls of tobacco did you smoke per day?

C. **Cardiovascular**

1. Have you ever been diagnosed with any of the following:

Which of the following apply to you now or did apply to you at some time in the past, even if the problem is controlled by medication? Please explain any yes answers (i.e., when problem was diagnosed, length of time on medication).

   a. High cholesterol or triglyceride level

   b. Hypertension (high blood pressure)

   c. Diabetes

   d. Family history of heart attack, stroke, or blocked arteries

2. Have you ever had chest pain? If so, answer the next five questions.

   a. What was the quality of the pain (i.e., crushing, stabbing, squeezing)?

   b. Did the pain go anywhere (i.e., into jaw, left arm)?

   c. What brought the pain out?

   d. How long did it last?

   e. What made the pain go away?

3. Have you ever had heart disease, a heart attack, stroke, aneurysm, or blocked arteries anywhere in your body? Explain (when, treatment).

4. Have you ever had bypass surgery for blocked arteries in your heart or anywhere else? Explain.

5. Have you ever had any other procedures done to open up a blocked artery (balloon angioplasty, carotid endarterectomy, clot-dissolving drug)?

6. Do you have or have you ever had (explain each):

   a. Heart murmur

   b. Irregular heartbeat

   c. Shortness of breath while lying flat

   d. Congestive heart failure

   e. Ankle swelling

   f. Recurrent pain anywhere below the waist while walking

7. Have you ever had an electrocardiogram (EKG)? When?

8. Have you ever had an abnormal EKG? If so, when, where, and what were the findings?

9. Do any heart diseases, high blood pressure, diabetes, high cholesterol, or high triglycerides run in your family? Explain.

D. **Hepatobiliary and Pancreas**

1. Do you now or have you ever drunk alcoholic beverages? Age started: _____ Age stopped: _____.

2. Average numbers per week:

   a. Beers:_____, ounces in usual container:

   b. Glasses of wine:_____, ounces per glass:

   c. Drinks:_____, ounces in usual container:

3. Do you have or have you ever had (explain each):

   a. Hepatitis (infectious, autoimmune, drug-induced, or chemical)

   b. Jaundice

   c. Elevated liver enzymes or elevated bilirubin

   d. Liver disease or cancer

E. **Central Nervous System**

1. Do you or have you ever had (explain each):

   a. Headache

   b. Dizziness

   c. Fainting

   d. Loss of consciousness

   e. Garbled speech

f. Lack of balance

g. Mental/psychiatric illness

h. Forgetfulness

F. **Hematologic**

1. Do you have, or have you ever had (explain each):

a. Anemia

b. Sickle cell disease or trait

c. Glucose-6-phosphate dehydrogenase deficiency

d. Bleeding tendency disorder

2. If not already mentioned previously, have you ever had a reaction to sulfa drugs or to drugs used to prevent or treat malaria? What was the drug? Describe the reaction.

_____

_____

B. Physical Examination

The complete physical examination, when coupled with the medical and occupational history, assists the physician or other licensed health care professional in detecting pre-existing conditions that might place the employee at increased risk, and establishes a baseline for future health monitoring. These examinations should include:

1. Clinical impressions of the nervous system, cardiovascular function and pulmonary function, with additional tests conducted where indicated or determined by the examining physician or other licensed health care professional to be necessary.

2. An evaluation of the advisability of the worker using a respirator, because the use of certain respirators places an additional burden on the cardiopulmonary system. It is necessary for the attending physician or other licensed health care professional to evaluate the cardiopulmonary function of these workers, in order to inform the employer in a written medical opinion of the worker's ability or fitness to work in an area requiring the use of certain types of respiratory protective equipment. The presence of facial hair or scars that might interfere with the worker's ability to wear certain types of respirators should also be noted during the examination and in the written medical opinion.

Because of the importance of lung function to workers required to wear certain types of respirators to protect themselves from MC exposure, these workers must receive an assessment of pulmonary function before they begin to wear a negative pressure respirator and at least annually thereafter.

The recommended pulmonary function tests include measurement of the employee's forced vital capacity (FVC), forced expiratory volume at one second (FEV_1), as well as calculation of the ratios of FEV_1 to FVC, and the ratios of measured FVC and measured FEV_1 to expected respective values corrected for variation due to age, sex, race, and height. Pulmonary function evaluation must be conducted by a physician or other licensed health care professional experienced in pulmonary function tests.

The following is a summary of the elements of a physical exam which would fulfill the requirements under the MC standard:

Physical Exam

I. Skin and appendages
   1. Irritated or broken skin
   2. Jaundice
   3. Clubbing cyanosis, edema
   4. Capillary refill time
   5. Pallor

II. Head
   1. Facial deformities
   2. Scars
   3. Hair growth

III. Eyes
   1. Scleral icterus
   2. Corneal arcus
   3. Pupillary size and response
   4. Fundoscopic exam

IV. Chest
   1. Standard exam

V. Heart
   1. Standard exam
   2 Jugular vein distension
   3. Peripheral pulses

VI. Abdomen
   1. Liver span

VII. Nervous System
   1. Complete standard neurologic exam

VIII. Laboratory
   1. Hemoglobin and hematocrit
   2. Alanine aminotransferase (ALT, SGPT)
   3. Post-shift carboxyhemoglobin

I. Studies

1. Pulmonary function testing

2. Electrocardiogram

An evaluation of the oxygen carrying capacity of the blood of employees (for example by measured red blood cell volume) is considered useful, especially for workers acutely exposed to MC. It is also recommended, but not required, that end of shift carboxyhemoglobin levels be determined periodically, and any level above 3% for nonsmokers and above 10% for smokers should prompt an investigation of the worker and his workplace. This test is recommended because MC is metabolized to CO, which combines strongly with hemoglobin, resulting in a reduced capacity of the blood to transport oxygen in the body. This is of particular concern for cigarette smokers because they already have a diminished hemoglobin capacity due to the presence of CO in cigarette smoke.

C. Additional Examinations and Referrals

1. Examination by a Specialist

When a worker examination reveals unexplained symptoms or signs (i.e. in the physical examination or in the laboratory tests), follow-up medical examinations are necessary to assure that MC exposure is not adversely affecting the worker's health. When the examining physician or other licensed health care professional finds it necessary, additional tests should be included to determine the nature of the medical problem and the underlying cause. Where relevant, the worker should be sent to a specialist for further testing and treatment as deemed necessary. The final rule requires additional investigations to be covered and it also permits physicians or other licensed health care professionals to add appropriate or necessary tests to improve the diagnosis of disease should such tests become available in the future.

2. Emergencies

The examination of workers exposed to MC in an emergency should be directed at the organ systems most likely to be affected. If the worker has received a severe acute exposure, hospitalization may be required to assure proper medical intervention. It is not possible to precisely define “severe,” but the physician or other licensed health care professional's judgment should not merely rest on hospitalization. If the worker has suffered significant conjunctival, oral, or nasal irritation, respiratory distress, or discomfort, the physician or other licensed health care professional should instigate appropriate follow-up procedures. These include attention to the eyes, lungs and the neurological system. The frequency of follow-up examinations should be determined by the attending physician or other licensed health care professional. This testing permits the early identification essential to proper medical management of such workers.

D. Employer Obligations

The employer is required to provide the responsible physician or other licensed health care professional and any specialists involved in a diagnosis with the following information: a copy of the MC standard including relevant appendices, a description of the affected employee's duties as they relate to their exposure to MC; an estimate of the employee's exposure including duration (e.g., 15hr/wk., three 8-hour shifts/wk., full

time); a description of any personal protective equipment used by the employee, including respirators; and the results of any previous medical determinations for the affected employee related to MC exposure to the extent that this information is within the employer's control.

E. Physicians' or Other Licensed Health Care Professionals' Obligations

The standard requires the employer to ensure that the physician or other licensed health care professional provides a written statement to the employee and the employer. This statement should contain the physician's or licensed health care professional's opinion as to whether the employee has any medical condition placing him or her at increased risk of impaired health from exposure to MC or use of respirators, as appropriate. The physician or other licensed health care professional should also state their opinion regarding any restrictions that should be placed on the employee's exposure to MC or upon the use of protective clothing or equipment such as respirators. If the employee wears a respirator as a result of their exposure to MC, the physician or other licensed health care professional's opinion should also contain a statement regarding the suitability of the employee to wear the type of respirator assigned.

Furthermore, the employee should be informed by the physician or other licensed health care professional about the cancer risk of MC and about risk factors for heart disease, and the potential for exacerbation of underlying heart disease by exposure to MC through its metabolism to carbon monoxide. Finally, the physician or other licensed health care professional should inform the employer that the employee has been told the results of the medical examination and of any medical conditions which require further explanation or treatment. This written opinion must not contain any information on specific findings or diagnosis unrelated to employee's occupational exposures.

The purpose in requiring the examining physician or other licensed health care professional to supply the employer with a written opinion is to provide the employer with a medical basis to assist the employer in placing employees initially, in assuring that their health is not being impaired by exposure to MC, and to assess the employee's ability to use any required protective equipment.

WAC 296-62-07477 Appendix C. Questions and answers--methylene chloride in furniture stripping.

(Adapted from NIOSH Publication No. 93-133)

Introduction

This appendix answers commonly asked questions about the hazards from exposure to methylene chloride. It also describes approaches to controlling methylene chloride exposure during the most common furniture stripping processes. Although these approaches were developed and field tested by the National Institute of Occupational Safety and Health, each setting requires custom installation because of the different air flow interferences at each site.

1. What is the Stripping Solution Base?

The most common active ingredient in paint removers is a chemical called methylene chloride. Methylene chloride is present in the paint remover to penetrate, blister, and finally lift the old finish. Other chemicals in paint removers work to accelerate the stripping process, to retard evaporation, and to act as thickening agents. These other ingredients may include: methanol, toluene, acetone, or paraffin.1

2. Is Methylene Chloride Bad for Me?

Exposure to methylene chloride may cause short-term health effects or long-term health effects.

Short-Term (Acute) Health Effects

Exposure to high levels of paint removers over short periods of time can cause irritation to the skin, eyes, mucous membranes, and respiratory tracts. Other symptoms of high exposure are dizziness, headache, and lack of coordination. The occurrence of any of these symptoms indicates that you are being exposed to high levels of methylene chloride. At the onset of any of these symptoms, you should leave the work area, get some fresh air, and determine why the levels were high.

A portion of inhaled methylene chloride is converted by the body to carbon monoxide, which can lower the blood's ability to carry oxygen. When the solvent is used properly, however, the levels of carbon monoxide should not be hazardous. Individuals with cardiovascular or pulmonary health problems should check with their physician before using the paint stripper. Individuals experiencing severe symptoms such as shortness of breath or chest pains should obtain proper medical care immediately.[1]

Long-Term (Chronic) Health Effects

Methylene chloride has been shown to cause cancer in certain laboratory animal tests. The available human studies do not provide the necessary information to determine whether methylene chloride causes cancer in humans. However, as a result of the animal studies, methylene chloride is considered a potential occupational carcinogen. There is also considerable indirect evidence to suggest that workers exposed to methylene chloride may be at an increased risk of developing ischemic heart disease. Therefore, it is prudent to minimize exposure to solvent vapors.[3]

3. What does the Methylene Chloride Standard Require?

On January 10, 1997, the Occupational Safety and Health Administration published a new regulation for methylene chloride. The standard establishes an eight-hour time-weighted average exposure limit of 25 parts per million (ppm), as well as a short-term exposure limit of 125 ppm determined from a 15 minute sampling period. That is a reduction from the current WISHA limit of 100 ppm. The standard also sets a 12.5 ppm action level (a level that would trigger periodic exposure monitoring and medical surveillance provisions).[2] WISHA adopted an identical standard on [date].

The National Institute for Occupational Safety and Health recommends that methylene chloride be regarded as a “potential occupational carcinogen.” NIOSH further recommends that occupational exposure to methylene chloride be controlled to the lowest feasible limit. This recommendation was based on the observation of cancers and tumors in both rats and mice exposed to methylene chloride in air.[5]

4. How Can I Be Exposed to Methylene Chloride while Stripping Furniture?

Methylene chloride can be inhaled when vapors are in the air. Inhalation of the methylene chloride vapors is generally the most important source of exposure. Methylene chloride evaporates quicker than most chemicals. The odor threshold of methylene chloride is 300 ppm.[6] Therefore, once you smell methylene chloride, you are being over-exposed. Pouring, moving, or stirring the chemical will increase the rate of evaporation.

Methylene chloride can be absorbed through the skin either by directly touching the chemical or through your gloves. Methylene chloride can be swallowed if it gets on your hands, clothes, or beard, or if food or drinks become contaminated.

5. How Can Breathing Exposures be Reduced?

Install a Local Exhaust Ventilation System

Local exhaust ventilation can be used to control exposures. Local exhaust ventilation systems capture contaminated air from the source before it spreads into the workers' breathing zone.[7] If engineering controls are not effective, only a self-contained breathing apparatus equipped with a full face piece and operated in a positive-pressure mode or a supplied-air respirator affords the level of protection. Air-purifying respirators such as gas masks with organic vapor canisters can only be used for escape situations.[8] These gas masks are not suitable for normal work situations because methylene chloride is poorly absorbed by the canister filtering material.

A local exhaust system consists of the following: a hood, a fan, ductwork, and a replacement air system.[9,10,11] Two processes are commonly used in furniture stripping: flow-over and dip tanks. For flow-over systems there are two common local exhaust controls for methylene chloride - a slot hood and a down draft hood. A slot hood of different design is most often used for dip tanks. (See Figures 1, 2, and 3.)

The hood is made of sheet metal and connected to the tank. All designs require a centrifugal fan to exhaust the fumes, ductwork connecting the hood and the fan, and a replacement air system to bring conditioned air into the building to replace the air exhausted.

In constructing or designing a slot or down draft hood, use the following data:

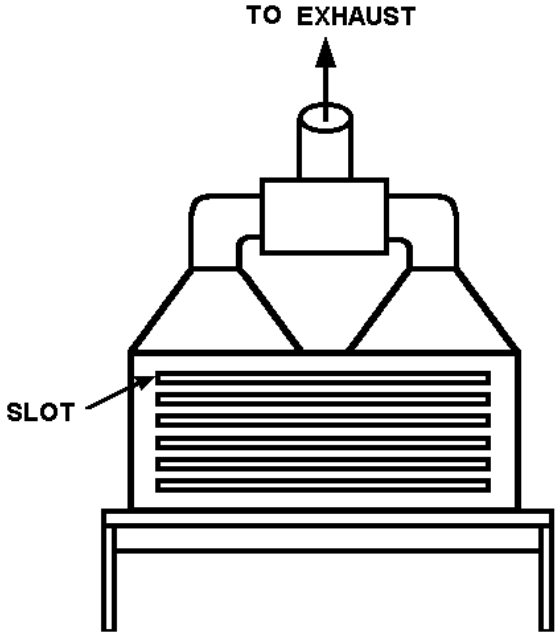

FIGURE 1 -- SLOT HOOD

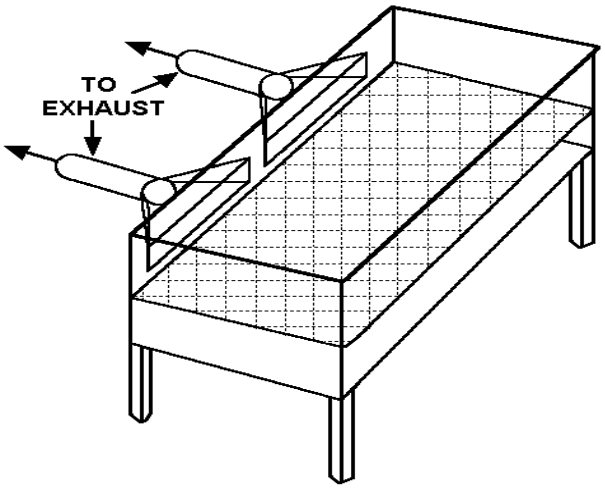

FIGURE 2 -- DOWNDRAFT HOOD

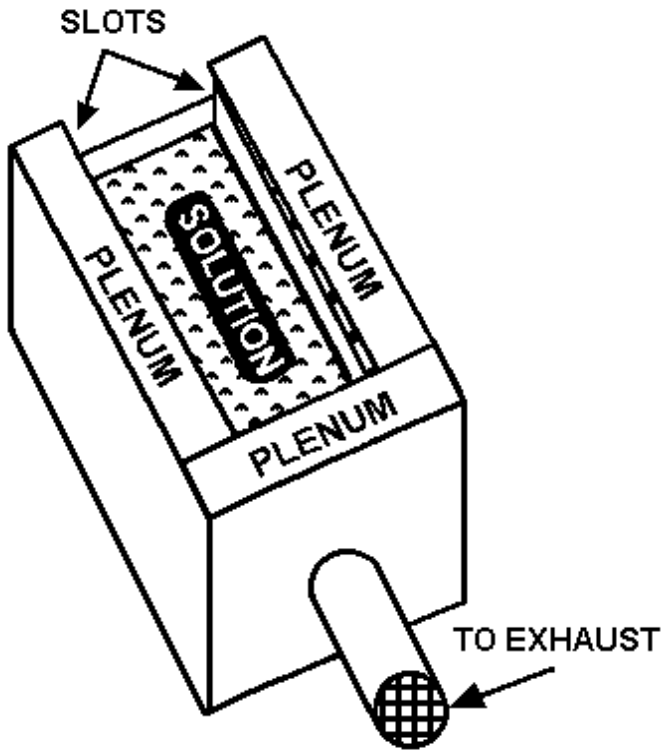

FIGURE 3 -- SLOT HOOD FOR DIP TANK

Safe Work-practices

Workers can lower exposures by decreasing their access to the methylene chloride.[12]

1) Turn on dip tank control system several minutes before entering the stripping area.
2) Avoid unnecessary transferring or moving of the stripping solution.
3) Keep face out of the air stream between the solution-covered furniture and the exhaust system.
4) Keep face out of vapor zone above the stripping solution and the dip tank.
5) Retrieve dropped items with a long handled tool.
6) Keep the solution-recycling system off when not in use. Cover reservoir for recycling system.
7) Cover dip tank when not in use.
8) Provide adequate ventilation for rinse area.

How Can Skin Exposures Be Reduced?

Skin exposures can be reduced by wearing gloves whenever you are in contact with the stripping solution.[13]

1) Two gloves should be worn. The inner glove should be made from polyethylene/ethylene vinyl alcohol (e.g., Silver Shield®, or 4H®). This material, however, does not provide good physical resistance against tears, so an outer glove made from nitrile or neoprene should be worn.

2) Shoulder-length gloves will be more protective.

3) Change gloves before the break-through time occurs. Rotate several pairs of gloves throughout the day. Let the gloves dry in a warm well-ventilated area at least over night before reuse.

4) Keep gloves clean by rinsing often. Keep gloves in good condition. Inspect the gloves before use for pin-holes, cracks, thin spots, and stiffer than normal or sticky surfaces.

5) Wear a face shield or goggles to protect face and eyes.

6. What Other Problems Can Occur?

Stripping Solution Temperature

Most manufacturers of stripping solution recommend controlling the solution to a temperature of 70°F. This temperature is required for the wax in the solution to form a vapor barrier on top of the solution to keep the solution from evaporating too quickly. If the temperature is too high, the wax will not form the vapor barrier. If it is too cold, the wax will solidify and separate from the solvent causing increased evaporation. Use a belt heater to heat the solution to the correct temperature. Call your solution manufacturer for the correct temperature for your solution.[14]

Make-Up Air

Air will enter a building in an amount to equal the amount of air exhausted whether or not provision is made for this replacement. If a local exhaust system is added a make-up or replacement air system must be added to replace the air removed. Without a replacement air system, air will enter the building through cracks causing uncontrollable eddy currents. If the building perimeter is tightly sealed, it will prevent the air from entering and severely decrease the amount exhausted from the ventilation system. This will cause the building to be under negative pressure and decrease the performance of the exhaust system.[15]

Dilution Ventilation

With general or dilution ventilation, uncontaminated air is moved through the workroom by means of fans or open windows, which dilutes the pollutants in the air. Dilution ventilation does not provide effective protection to other workers and does not confine the methylene chloride vapors to one area.[16]

Phosgene Poisoning from Use of Kerosene Heaters

Do not use kerosene heaters or other open flame heaters while stripping furniture. Use of kerosene heaters in connection with methylene chloride can create lethal or dangerous concentrations of phosgene. Methylene chloride vapor is mixed with the air used for the combustion of kerosene in kerosene stoves. The vapor thus passes through the flames, coming into close contact with carbon monoxide at high temperatures. Any chlorine formed by decomposition may, under these conditions, react with carbon monoxide and form phosgene.[17]

REFERENCES

[1]Halogenated Solvents Industry Alliance and Consumer Product Safety Commission [1990]. Stripping Paint from Wood (Pamphlet for consumers on how to strip furniture and precautions to take). Washington DC: Consumer Product Safety Commission.

[2]*Ibid*.

[3]NIOSH [1992]. NIOSH Testimony on Occupational Safety and Health Administration's proposed rule on occupational exposure to methylene chloride, September 21, 1992, OSHA Docket No. H-71. NIOSH policy statements. Cincinnati, OH: U.S. Department of Health and Human Services, Public Health Service, Centers for Disease Control, National Institute for Occupational Safety and Health.

[4]56 Fed. Reg. 57036 [1991]. Occupational Safety and Health Administration: Proposed rule on occupational exposure to methylene chloride.

[5]NIOSH [1992].

[6]Kirk, R.E. and P.F. Othmer, Eds. [1978]. Encyclopedia of Chemical Technology, 3rd Ed., Vol. 5:690. New York: John Wiley & Sons, Inc.

[7]ACGIH [1988]. Industrial Ventilation: A Manual of Recommended Practice. 20th Ed. Cincinnati, OH: American Conference of Governmental Industrial Hygienists.

[8]NIOSH [1992].

[9]Fairfield, C.L. and A.A. Beasley [1991]. In-depth Survey Report at the Association for Retarded Citizens, Meadowlands, PA. The Control of Methylene Chloride During Furniture Stripping. Cincinnati, OH: U.S. Department of Health and Human Services, Public Health Service, Centers for Disease Control, National Institute for Occupational Safety and Health.

[10]Fairfield, C.L. [1991]. In-depth Survey Report at the J.M. Murray Center, Cortland, NY. The Control of Methylene Chloride During Furniture Stripping. Cincinnati, OH: U.S. Department of Health and Human Services, Publish Health Service, Centers for Disease Control, National Institute for Occupational Safety and Health.

[11]Hall, R.M., K.F. Martinez, and P.A. Jensen [1992]. In-depth Survey Report at Tri-County Furniture Stripping and Refinishing, Cincinnati, OH. The Control of Methylene Chloride During Furniture Stripping. Cincinnati, OH: U.S. Department of Health and Human Services, Public Health Service, Centers for Disease Control, National Institute for Occupational Safety and Health.

[12]Fairfield, C.L. and A.A. Beasley [1991]. In-depth Survey Report at the Association for Retarded Citizens, Meadowlands, PA. The Control of Methylene Chloride During Furniture Stripping. Cincinnati, OH: U.S. Department of Health and Human Service, Centers for Disease Control, National Institute for Occupational Safety and Health.

[13]Roder, M. [1991]. Memorandum of March 11, 1991 from Michael Roder of the Division of Safety Research to Cheryl L. Fairfield of the Division of Physical Sciences and Engineering, National Institute for Occupational Safety and Health, Centers for Disease Control, Public Health Service, U.S. Department of Health and Human Services.

[14]Kwick Kleen Industrial Solvents, Inc., [1981]. Operations Manual, Kwick Kleen Industrial Solvents, Inc., Vincennes, IN.

[15]ACGIH [1988].

[16]*Ibid*.

[17]Gerritsen, W.B. and C.H. Buschmann [1960]. Phosgene Poisoning Caused by the Use of Chemical Paint Removers containing Methylene Chloride in III-Ventilated Rooms Heated by Kerosene Stoves. British Journal of Industrial Medicine 17:187.

PART I
AIRBORNE CONTAMINANTS (SPECIFIC)

WAC **Page**

WAC 296-62-07517 Reserved. 1

WAC 296-62-07519 Thiram. 1

WAC 296-62-07521 Lead. 3

WAC 296-62-07531 Appendix D sampling and analytical methods for benzene monitoring and measurement procedures. 60

WAC 296-62-07540 Formaldehyde. 69

WAC 296-62-07542 Appendix A--Substance technical guideline for formalin. 84

WAC 296-62-07544 Appendix B--Sampling strategy and analytical methods for formaldehyde. 93

WAC 296-62-07546 Appendix C medical surveillance--Formaldehyde. 106

WAC 296-62-07548 Appendix D--Nonmandatory medical disease questionnaire. 110

WAC 296-62-076 Methylenedianiline. 116

WAC 296-62-07601 Scope and application. 116

WAC 296-62-07603 Definitions. 116

WAC 296-62-07605 Permissible exposure limits (PEL). 117

WAC 296-62-07607 Emergency situations. 117

WAC 296-62-07609 Exposure monitoring. 118

WAC 296-62-07611 Regulated areas. 119

WAC 296-62-07613 Methods of compliance. 120

WAC 296-62-07615 Respiratory protection. 120

WAC 296-62-07617 Protective work clothing and equipment. 121

WAC 296-62-07619 Hygiene facilities and practices. 122

WAC 296-62-07621 Communication of hazards. 123

WAC 296-62-07623 Housekeeping. 124

WAC 296-62-07625 Medical surveillance. 125

WAC 296-62-07627 Medical removal--Temporary medical removal of an employee. 128

WAC 296-62-07629 Medical removal protection benefits. 129

WAC 296-62-07631 Recordkeeping. 131

WAC 296-62-07633 Observation of monitoring. 133

WAC 296-62-07637 Appendices. 134

WAC 296-62-07654 Appendix A to WAC 296-62-076--Substance data sheet, for 4,4'-methylenedianiline. 134

WAC 296-62-07656 Appendix B to WAC 296-62-076--Substance technical guidelines, MDA. 136

WAC 296-62-07658 Appendix C to WAC 296-62-076--Medical surveillance guidelines for MDA. 138

WAC 296-62-07660 Appendix D to WAC 296-62-076--Sampling and analytical methods for MDA monitoring and measurement procedures. 139

WAC 296-62-07517 Reserved.

WAC 296-62-07519 Thiram.

(1) **Scope and application**. This section applies to occupational exposure to thiram (tetramethylthiuram disulfide), in addition to those requirements listed in chapter 296-841 Airborne contaminants. Nothing in this section shall preclude the application of other appropriate standards and regulations to minimize worker exposure to thiram.

(2) **Definitions**. The following definitions are applicable to this section:

(a) **Clean**. The absence of dirt or materials which may be harmful to a worker's health.

(b) **Large seedlings**. Those seedlings of such size, either by length or breadth, that it is difficult to avoid contact of the thiram treated plant with the mouth or face during planting operations.

(3) **General requirements**.

(a) Workers should not be allowed to work more than five days in any seven day period with or around the application of thiram or thiram treated seedlings.

(b) Washing and worker hygiene.

(i) Workers must wash their hands prior to eating or smoking at the close of work.

(ii) Warm (at least 85°F, 29.4°C) wash water and single use hand wiping materials must be provided for washing.

(iii) The warm water and hand wiping materials must be at fixed work locations or at the planting unit.

(iv) Where warm water is not available within fifteen minutes travel time, nonalcoholic based waterless hand cleaner must be provided.

(v) Every planter or nursery worker must be advised to bathe or shower daily.

(vi) The inside of worker carrying vehicles must be washed or vacuumed and wiped down at least weekly during the period of thiram use.

(c) Personal protective measures.

(i) Clothing must be worn by workers to reduce skin contact with thiram to the legs, arms and torso.

(ii) For those workers who have thiram skin irritations, exposed areas of the body must be protected by a suitable barrier cream.

(iii) Clothing worn by workers must be washed or changed at least every other day.

(iv) Only impervious gloves may be worn by workers.

(v) Workers hands should be clean of thiram before placing them into gloves.

(vi) Thiram applicators must be provided with and use respiratory protection in accordance with chapter 296-842 WAC, Respirators, disposable coveralls or rubber slickers or other impervious clothing, rubberized boots, head covers and rubberized gloves.

(vii) Nursery workers, other than applicators, who are likely to be exposed to thiram must be provided with and use disposable coveralls or rubber slickers or other impervious clothing, impervious footwear and gloves, and head covers in accordance with WAC 296-800-160, unless showers have been provided and are used.

(viii) Eye protection according to WAC 296-800-160, must be provided and worn by workers who may be exposed to splashes of thiram during spraying, plug bundling, belt line grading and plugging or other operations.

(ix) Item (viii) of this subdivision need not be complied with where pressurized emergency eye wash fountains are within 10 seconds travel time of the work location. (Approved respirator - see chapter 296-842 WAC, Respirators.)

(x) A dust mask must be worn, when planting large seedlings, to avoid mouth and face contact with the thiram treated plant unless equally effective measures or planting practices have been established.

(d) Food handling.

(i) Food snacks, beverages, smoking materials, or any other item which is consumed must not be stored or consumed in the packing area of the nursery.

(ii) Worker carrying vehicles must have a clean area for carrying lunches.

(iii) The clean area of the vehicle must be elevated from the floor and not used to carry other than food or other consumable items.

(iv) The carrying of lunches, food or other consumable items in tree planting bags is prohibited.

(v) Care must be taken to ensure that worker exposure to thiram spray, including downwind driftings, is minimized or eliminated.

(vi) When bags that contained thiram or thiram treated seedlings are burned, prevent worker exposure to the smoke.

(e) Thiram use and handling.

(i) Thiram treated seedlings must be allowed to dry or stabilize prior to packing.

(ii) Seedlings must be kept moist during packing and whenever possible during planting operations.

(iii) Floors, where thiram is used, must not be dry swept but instead vacuumed, washed or otherwise cleaned at least daily.

(iv) Silica chips used to cover thiram treated seedling plugs must be removed at the nursery.

(f) Training.

(i) Each worker engaged in operations where exposure to thiram may occur must be provided training on the hazards of thiram, as well as the necessary precautions for its safe use and handling.

(ii) The training must include instruction in:

(A) The nature of the health hazard(s) from exposure to thiram including specifically the potential for alcohol intolerance, drug interaction, and skin irritation;

(B) The specific nature of operations which could result in exposure to thiram and the necessary protective steps;

(C) The purpose for, proper use, and limitations of protective devices including respirators and clothing;

(D) The necessity for and requirements of good personal hygiene; and

(E) A review of the thiram rules at the worker's first training and indoctrination, and annually thereafter.

(4) **Effective date**. This standard must become effective thirty days after being filed with the code reviser.

WAC 296-62-07521 Lead.

(1) **Scope and application**.

(a) This section applies to all occupational exposure to lead, except as provided in subdivision (1)(b).

(b) This section does not apply to the construction industry or to agricultural operations covered by chapter 296-307 WAC.

(2) **Definitions as applicable to this part.**

(a) **Action level**. Employee exposure, without regard to the use of respirators, to an airborne concentration of lead of thirty micrograms per cubic meter of air (30 $\mu g/m^3$) averaged over an eight-hour period.

(b) **Director** The director of the department of labor and industries.

(c) **Lead**. Metallic lead, all inorganic lead compounds, and organic lead soaps. Excluded from this definition are all other organic lead compounds.

(3) **General requirements**.

(a) Employers will assess the hazards of lead in the work place and provide information to the employees about the hazards of the lead exposures to which they may be exposed.

(b) Information provided must include:

(i) Exposure monitoring (including employee notification);

(ii) Written compliance programs;

(iii) Respiratory protection programs;

(iv) Personnel protective equipment and housekeeping;

(v) Medical surveillance and examinations;

(vi) Training requirements;

(vii) Recordkeeping requirements.

(4) **Permissible exposure limit (PEL)**.

(a) The employer must ensure that no employee is exposed to lead at concentrations greater than fifty micrograms per cubic meter of air (50 $\mu g/m^3$) averaged over an eight-hour period.

(b) If an employee is exposed to lead for more than eight hours in any work day, the permissible exposure limit, as a time weighted average (TWA) for that day, must be reduced according to the following formula:

Maximum permissible limit (in $\mu g/m^3$) = 400 ÷ hours worked in the day.

(c) When respirators are used to supplement engineering and work practice controls to comply with the PEL and all the requirements of subsection (7) have been met, employee exposure, for the purpose of determining whether the employer has complied with the PEL, may be considered to be at the level provided by the protection factor of the respirator for those periods the respirator is worn. Those periods may be averaged with exposure levels during periods when respirators are not worn to determine the employee's daily TWA exposure.

(5) **Exposure monitoring**.

(a) General.

(i) For the purposes of subsection (5), employee exposure is that exposure which would occur if the employee were not using a respirator.

(ii) With the exception of monitoring under subdivision (5)(c), the employer must collect full shift (for at least seven continuous hours) personal samples including at least one sample for each shift for each job classification in each work area.

(iii) Full shift personal samples must be representative of the monitored employee's regular, daily exposure to lead.

(b) Initial determination. Each employer who has a workplace or work operation covered by this standard must determine if any employee may be exposed to lead at or above the action level.

(c) Basis of initial determination.

(i) The employer must monitor employee exposures and must base initial determinations on the employee exposure monitoring results and any of the following, relevant considerations:

(A) Any information, observations, or calculations which would indicate employee exposure to lead;

(B) Any previous measurements of airborne lead; and

(C) Any employee complaints of symptoms which may be attributable to exposure to lead.

(ii) Monitoring for the initial determination may be limited to a representative sample of the exposed employees who the employer reasonably believes are exposed to the greatest airborne concentrations of lead in the workplace.

(iii) Measurements of airborne lead made in the preceding twelve months may be used to satisfy the requirement to monitor under item (5)(c)(i) if the sampling and analytical methods used meet the accuracy and confidence levels of subdivision (5)(i) of this section.

(d) Positive initial determination and initial monitoring.

(i) Where a determination conducted under subdivision (5)(b) and (5)(c) of this section shows the possibility of any employee exposure at or above the action level, the employer must conduct monitoring which is representative of the exposure for each employee in the workplace who is exposed to lead.

(ii) Measurements of airborne lead made in the preceding twelve months may be used to satisfy this requirement if the sampling and analytical methods used meet the accuracy and confidence levels of subdivision (5)(i) of this section.

(e) Negative initial determination. Where a determination, conducted under subdivisions (5)(b) and (5)(c) of this section is made that no employee is exposed to airborne concentrations of lead at or above the action level, the employer must make a written record of such determination. The record must include at least the information specified in subdivision (5)(c) of this section and must also include the date of determination, location within the worksite, and the name and social security number of each employee monitored.

(f) Frequency.

(i) If the initial monitoring reveals employee exposure to be below the action level the measurements need not be repeated except as otherwise provided in subdivision (5)(g) of this section.

(ii) If the initial determination or subsequent monitoring reveals employee exposure to be at or above the action level but below the permissible exposure limit the employer must repeat monitoring in accordance with this subsection at least every six months. The employer must continue monitoring at the required frequency until at least two consecutive measurements, taken at least seven days apart, are below the action level at which time the employer may discontinue monitoring for that employee except as otherwise provided in subdivision (5)(g) of this section.

(iii) If the initial monitoring reveals that employee exposure is above the permissible exposure limit the employer must repeat monitoring quarterly. The employer must continue monitoring at the required frequency until at least two consecutive measurements, taken at least seven days apart, are below the PEL but at or above the action level at which time the employer must repeat monitoring for that employee at the frequency specified in item (5)(f)(ii), except as otherwise provided in subdivision (5)(g) of this section.

(g) Additional monitoring. Whenever there has been a production, process, control or personnel change which may result in new or additional exposure to lead, or whenever the employer has any other reason to suspect a change which may result in new or additional exposures to lead, additional monitoring in accordance with this subsection shall be conducted.

(h) Employee notification.

(i) Within five working days after the receipt of monitoring results, the employer must notify each employee in writing of the results which represent that employee's exposure.

(ii) Whenever the results indicate that the representative employee exposure, without regard to respirators, exceeds the permissible exposure limit, the employer must include in the written notice a statement that the permissible exposure limit was exceeded and a description of the corrective action taken or to be taken to reduce exposure to or below the permissible exposure limit.

(i) Reserved.

(j) Accuracy of measurement. The employer must use a method of monitoring and analysis which has an accuracy (to a confidence level of ninety-five percent) of not less than plus or minus twenty percent for airborne concentrations of lead equal to or greater than 30 $\mu g/m^3$.

(6) **Methods of compliance**.

(a) Engineering and work practice controls.

(i) Where any employee is exposed to lead above the permissible exposure limit for more than thirty days per year, the employer must implement engineering and work practice controls (including administrative controls) to reduce and maintain employee exposure to lead in accordance with the implementation schedule in Table I below, except to the extent that the employer can demonstrate that such controls are not feasible. Wherever the engineering and work practice controls which can be instituted are not sufficient to reduce employee exposure to or below the permissible exposure limit, the employer must nonetheless use them to reduce exposures to the lowest feasible level and must supplement them by the use of respiratory protection which complies with the requirements of subsection (7) of this section.

(ii) Where any employee is exposed to lead above the permissible exposure limit, but for thirty days or less per year, the employer must implement engineering controls to reduce exposures to 200 $\mu g/m^3$, but thereafter may implement any combination of engineering, work practice (including administrative controls), and respiratory controls to reduce and maintain employee exposure to lead to or below 50 $\mu g/m^3$.

Table 1

Industry	Compliance dates[1] ($50\ \mu g/m^3$)
Lead chemicals, secondary copper smelting	July 19, 1996
Nonferrous foundries	July 19, 1996[2]
Brass and bronze ingot manufacture.	6 years[3]

[1] Calculated by counting from the date the stay on implementation of subsection (6)(a) was lifted by the U.S. Court of Appeals for the District of Columbia, the number of years specified in the 1978 lead standard and subsequent amendments for compliance with the PEL of 50 $\mu g/m^3$ for exposure to airborne concentrations of lead levels for the particular industry.

[2] Large nonferrous foundries (20 or more employees) are required to achieve the PEL of 50 $\mu g/m^3$ by means of engineering and work practice controls. Small nonferrous foundries (fewer than 20 employees) are required to achieve an 8-hour TWA of 75 $\mu g/m^3$ by such controls.

[3] Expressed as the number of years from the date on which the Court lifts the stay on the implementation of subsection (6)(a) for this industry for employers to achieve a lead in air concentration of 75 $\mu g/m^3$. Compliance with subsection (6) in this industry is determined by a compliance directive that incorporates elements from the settlement agreement between OSHA and representatives of the industry.

(b) Respiratory protection. Where engineering and work practice controls do not reduce employee exposure to or below the 50 $\mu g/m^3$ permissible exposure limit, the employer must supplement these controls with respirators in accordance with subsection (7).

(c) Compliance program.

(i) Each employer must establish and implement a written compliance program to reduce exposures to or below the permissible exposure limit, and interim levels if applicable, solely by means of engineering and work practice controls in accordance with the implementation schedule in subdivision (6)(a).

(ii) Written plans for these compliance programs must include at least the following:

(A) A description of each operation in which lead is emitted; e.g., machinery used, material processed, controls in place, crew size, employee job responsibilities, operating procedures and maintenance practices;

(B) A description of the specific means that will be employed to achieve compliance, including engineering plans and studies used to determine methods selected for controlling exposure to lead;

(C) A report of the technology considered in meeting the permissible exposure limit;

(D) Air monitoring data which documents the source of lead emissions;

(E) A detailed schedule for implementation of the program, including documentation such as copies of purchase orders for equipment, construction contracts, etc.;

(F) A work practice program which includes items required under subsections (8), (9) and (10) of this regulation;

(G) An administrative control schedule required by subdivision (6)(f), if applicable; and

(H) Other relevant information.

(iii) Written programs must be submitted upon request to the director, and must be available at the worksite for examination and copying by the director, any affected employee or authorized employee representatives.

(iv) Written programs must be revised and updated at least every six months to reflect the current status of the program.

(d) Mechanical ventilation.

(i) When ventilation is used to control exposure, measurements which demonstrate the effectiveness of the system in controlling exposure, such as capture velocity, duct velocity, or static pressure must be made at least every three months. Measurements of the system's effectiveness in controlling exposure must be made within five days of any change in production, process, or control which might result in a change in employee exposure to lead.

(ii) Recirculation of air. If air from exhaust ventilation is recirculated into the workplace, the employer must ensure that (A) the system has a high efficiency filter with reliable back-up filter; and (B) controls to monitor the concentration of lead in the return air and to bypass the recirculation system automatically if it fails are installed, operating, and maintained.

(e) Administrative controls. If administrative controls are used as a means of reducing employees TWA exposure to lead, the employer must establish and implement a job rotation schedule which includes:

(i) Name or identification number of each affected employee;

(ii) Duration and exposure levels at each job or work station where each affected employee is located; and

(iii) Any other information which may be useful in assessing the reliability of administrative controls to reduce exposure to lead.

(7) **Respiratory protection**.

(a) General. For employees who use respirators required by this section, the employer must provide each employee an appropriate respirator that complies with the requirements of this subsection. Respirators must be used during:

(i) Periods necessary to install or implement engineering or work-practice controls;

(ii) Work operations for which engineering and work-practice controls are not sufficient to reduce exposures to or below the permissible exposure limit;

(iii) Periods when an employee requests a respirator.

(b) Respirator program.

(i) The employer must develop, implement and maintain a respiratory protection program as required by Chapter 296-842 WAC, Respirators, which covers each employee required by this chapter to use a respirator.

(ii) If an employee has difficulty breathing during fit testing or respirator use, the employer must provide the employee with a medical examination as required by subsection (11)(c)(ii)(C) of this section to determine whether or not the employee can use a respirator while performing the required duty.

(c) Respirator selection. The employer must:

(i) Select and provide to employees appropriate respirators according to this section and WAC 296-842-13005 found in the respirator rule.

(ii) Provide employees with a powered air-purifying respirator (PAPR) instead of a negative-pressure respirator selected when an employee chooses to use a PAPR and it provides adequate protection to the employee.

(iii) Provide employees with full-facepiece respirators instead of half-facepiece respirators for protection against lead aerosols that cause eye or skin irritation at the use concentration.

(iv) Provide HEPA filters or N-, R-, or P-100 filters for powered air-purifying respirators (PAPRs) and negative-pressure air-purifying respirators.

(8) **Protective work clothing and equipment**.

(a) Provision and use. If an employee is exposed to lead above the PEL, without regard to the use of respirators or where the possibility of skin or eye irritation exists, the employer must provide at no cost to the employee and ensure that the employee uses appropriate protective work clothing and equipment such as, but not limited to:

(i) Coveralls or similar full-body work clothing;

(ii) Gloves, hats, and shoes or disposable shoe coverlets; and

(iii) Face shields, vented goggles, or other appropriate protective equipment which complies with WAC 296-800-160.

(b) Cleaning and replacement.

(i) The employer must provide the protective clothing required in subdivision (8)(a) of this section in a clean and dry condition at least weekly, and daily to employees whose exposure levels without regard to a respirator are over 200 $\mu g/m^3$ of lead as an eight-hour TWA.

(ii) The employer must provide for the cleaning, laundering, or disposal of protective clothing and equipment required by subdivision (8)(a) of this section.

(iii) The employer must repair or replace required protective clothing and equipment as needed to maintain their effectiveness.

(iv) The employer must ensure that all protective clothing is removed at the completion of a work shift only in change rooms provided for that purpose as prescribed in subdivision (10)(b) of this section.

(v) The employer must ensure that contaminated protective clothing which is to be cleaned, laundered, or disposed of, is placed in a closed container in the change-room which prevents dispersion of lead outside the container.

(vi) The employer must inform in writing any person who cleans or launders protective clothing or equipment of the potentially harmful effects of exposure to lead.

(vii) The employer must ensure that the containers of contaminated protective clothing and equipment required by subdivision (8)(b)(v) are labeled as follows:

DANGER: CLOTHING AND EQUIPMENT CONTAMINATED WITH LEAD. MAY DAMAGE FERTILITY OR THE UNBORN CHILD. CAUSES DAMAGE TO THE CENTRAL NERVOUS SYSTEM. DO NOT EAT, DRINK OR SMOKE WHEN HANDLING. DO NOT REMOVE DUST BY BLOWING OR SHAKING. DISPOSE OF LEAD CONTAMINATED WASH WATER IN ACCORDANCE WITH APPLICABLE LOCAL, STATE, OR FEDERAL REGULATIONS.

(viii) The employer must prohibit the removal of lead from protective clothing or equipment by blowing, shaking, or any other means which disperses lead into the air.

(9) **Housekeeping**.

(a) Surfaces. All surfaces must be maintained as free as practicable of accumulations of lead.

(b) Cleaning floors.

(i) Floors and other surfaces where lead accumulates may not be cleaned by the use of compressed air.

(ii) Shoveling, dry or wet sweeping, and brushing may be used only where vacuuming or other equally effective methods have been tried and found not to be effective.

(c) Vacuuming. Where vacuuming methods are selected, the vacuums must be used and emptied in a manner which minimizes the reentry of lead into the workplace.

(10) **Hygiene facilities and practices**.

(a) The employer must ensure that in areas where employees are exposed to lead above the PEL, without regard to the use of respirators, food or beverage is not present or consumed, tobacco products are not present or used, and cosmetics are not applied, except in change rooms, lunchrooms, and showers required under subdivision (10)(b) through (10)(d) of this section.

(b) Change rooms.

(i) The employer must provide clean change rooms for employees who work in areas where their airborne exposure to lead is above the PEL, without regard to the use of respirators.

(ii) The employer must ensure that change rooms are equipped with separate storage facilities for protective work clothing and equipment and for street clothes which prevent cross-contamination.

(c) Showers.

(i) The employer must ensure that employees who work in areas where their airborne exposure to lead is above the PEL, without regard to the use of respirators, shower at the end of the work shift.

(ii) The employer must provide shower facilities in accordance with WAC 296-800-230.

(iii) The employer must ensure that employees who are required to shower pursuant to item (10)(c)(i) do not leave the workplace wearing any clothing or equipment worn during the work shift.

(d) Lunchrooms.

(i) The employer must provide lunchroom facilities for employees who work in areas where their airborne exposure to lead is above the PEL, without regard to the use of respirators.

(ii) The employer must ensure that lunchroom facilities have a temperature controlled, positive pressure, filtered air supply, and are readily accessible to employees.

(iii) The employer must ensure that employees who work in areas where their airborne exposure to lead is above the PEL without regard to the use of a respirator wash their hands and face prior to eating, drinking, smoking or applying cosmetics.

(iv) The employer must ensure that employees do not enter lunchroom facilities with protective work clothing or equipment unless surface lead dust has been removed by vacuuming, downdraft booth, or other cleaning method.

(e) Lavatories. The employer must provide an adequate number of lavatory facilities which comply with WAC 296-800-230.

(11) **Medical surveillance**.

(a) General.

(i) The employer must institute a medical surveillance program for all employees who are or may be exposed above the action level for more than thirty days per year.

(ii) The employer must ensure that all medical examinations and procedures are performed by or under the supervision of a licensed physician.

(iii) The employer must provide the required medical surveillance including multiple physician review under item (11)(c)(iii) without cost to employees and at a reasonable time and place.

(b) Biological monitoring.

(i) Blood lead and ZPP level sampling and analysis. The employer must make available biological monitoring in the form of blood sampling and analysis for lead and zinc protoporphyrin levels to each employee covered under item (11)(a)(i) of this section on the following schedule:

(A) At least every six months to each employee covered under item (11)(a)(i) of this section;

(B) At least every two months for each employee whose last blood sampling and analysis indicated a blood lead level at or above 40 µg/100 g of whole blood. This frequency must continue until two consecutive blood samples and analyses indicate a blood lead level below 40 µg/100 g of whole blood; and

(C) At least monthly during the removal period of each employee removed from exposure to lead due to an elevated blood lead level.

(ii) Follow-up blood sampling tests. Whenever the results of a blood lead level test indicate that an employee's blood lead level exceeds the numerical criterion for medical removal under item (12)(a)(i)(A), the employer must provide a second (follow-up) blood sampling test within two weeks after the employer receives the results of the first blood sampling test.

(iii) Accuracy of blood lead level sampling and analysis. Blood lead level sampling and analysis provided pursuant the this section must have an accuracy (to a confidence level of ninety-five percent) within plus or minus fifteen percent or 6 µg/100 ml, whichever is greater, and shall be conducted by a laboratory licensed by the Center for Disease Control (CDC), United States Department of Health, Education and Welfare or which has received a satisfactory grade in blood lead proficiency testing from CDC in the prior twelve months.

(iv) Employee notification. Within five working days after the receipt of biological monitoring results, the employer must notify in writing each employee whose blood lead level exceeds 40 µg/100 g: (A) of that employee's blood lead level and (B) that the standard requires temporary medical removal with medical removal protection benefits when an employee's blood lead level exceeds the numerical criterion for medical removal under item (12)(a)(i) of this section.

(c) Medical examinations and consultations.

(i) Frequency. The employer must make available medical examinations and consultations to each employee covered under item (11)(a)(i) of this section on the following schedule:

(A) At least annually for each employee for whom a blood sampling test conducted at any time during the preceding twelve months indicated a blood lead level at or above 40 µg/100 g;

(B) Prior to assignment for each employee being assigned for the first time to an area in which airborne concentrations of lead are at or above the action level;

(C) As soon as possible, upon notification by an employee either that the employee has developed signs or symptoms commonly associated with lead intoxication, that the employee desires medical advice concerning the effects of current or past exposure to lead on the employee's ability to procreate a healthy child, or that the employee has demonstrated difficulty in breathing during a respirator fitting test or during use; and

(D) As medically appropriate for each employee either removed from exposure to lead due to a risk of sustaining material impairment to health, or otherwise limited pursuant to a final medical determination.

(ii) Content. Medical examinations made available pursuant to subitems (11)(c)(i)(A) through (B) of this section must include the following elements:

(A) A detailed work history and a medical history, with particular attention to past lead exposure (occupational and nonoccupational), personal habits (smoking, hygiene), and past gastrointestinal, hematologic, renal, cardiovascular, reproductive and neurological problems;

(B) A thorough physical examination, with particular attention to teeth, gums, hematologic, gastrointestinal, renal, cardiovascular, and neurological systems. Pulmonary status should be evaluated if respiratory protection will be used;

(C) A blood pressure measurement;

(D) A blood sample and analysis which determines:

(I) Blood lead level;

(II) Hemoglobin and hematocrit determinations, red cell indices, and examination of peripheral smear morphology;

(III) Zinc protoporphyrin;

(IV) Blood urea nitrogen; and

(V) Serum creatinine;

(E) A routine urinalysis with microscopic examination; and

(F) Any laboratory or other test which the examining physician deems necessary by sound medical practice.

The content of medical examinations made available pursuant to subitems (11)(c)(i)(C) through (D) of this section must be determined by an examining physician and, if requested by an employee, shall include pregnancy testing or laboratory evaluation of male fertility.

(iii) Multiple physician review mechanism.

(A) If the employer selects the initial physician who conducts any medical examination or consultation provided to an employee under this section, the employee may designate a second physician:

(I) To review any findings, determinations or recommendations of the initial physician; and

(II) To conduct such examinations, consultations, and laboratory tests as the second physician deems necessary to facilitate this review.

(B) The employer must promptly notify an employee of the right to seek a second medical opinion after each occasion that an initial physician conducts a medical examination or consultation pursuant to this section. The employer may condition its participation in, and payment for, the multiple physician review mechanism upon the employee doing the following within fifteen days after receipt of the foregoing notification, or receipt of the initial physician's written opinion, whichever is later:

(I) The employee informing the employer that they intend to seek a second medical opinion, and

(II) The employee initiating steps to make an appointment with a second physician.

(C) If the findings, determinations or recommendations of the second physician differ from those of the initial physician, then the employer and the employee must ensure that efforts are made for the two physicians to resolve any disagreement.

(D) If the two physicians have been unable to quickly resolve their disagreement, then the employer and the employee through their respective physicians must designate a third physician:

(I) To review any findings, determinations or recommendations of the prior physicians; and

(II) To conduct such examinations, consultations, laboratory tests and discussions with the prior physicians as the third physician deems necessary to resolve the disagreement of the prior physicians.

(E) The employer must act consistent with the findings, determinations and recommendations of the third physician, unless the employer and the employee reach an agreement which is otherwise consistent with the recommendations of at least one of the three physicians.

(iv) Information provided to examining and consulting physicians.

(A) The employer must provide an initial physician conducting a medical examination or consultation under this section with the following information:

(I) A copy of this regulation for lead including all appendices;

(II) A description of the affected employee's duties as they relate to the employee's exposure;

(III) The employee's exposure level or anticipated exposure level to lead and to any other toxic substance (if applicable);

(IV) A description of any personal protective equipment used or to be used;

(V) Prior blood lead determinations; and

(VI) All prior written medical opinions concerning the employee in the employer's possession or control.

(B) The employer must provide the foregoing information to a second or third physician conducting a medical examination or consultation under this section upon request either by the second or third physician, or by the employee.

(v) Written medical opinions.

(A) The employer must obtain and furnish the employee with a copy of a written medical opinion from each examining or consulting physician which contains the following information:

(I) The physician's opinion as to whether the employee has any detected medical condition which would place the employee at increased risk of material impairment of the employee's health from exposure to lead;

(II) Any recommended special protective measures to be provided to the employee, or limitations to be placed upon the employee's exposure to lead;

(III) Any recommended limitation upon the employee's use of respirators, including a determination of whether the employee can wear a powered air purifying respirator if a physician determines that the employee cannot wear a negative pressure respirator; and

(IV) The results of the blood lead determinations.

(B) The employer must instruct each examining and consulting physician to:

(I) Not reveal either in the written opinion, or in any other means of communication with the employer, findings, including laboratory results, or diagnoses unrelated to an employee's occupational exposure to lead; and

(II) Advise the employee of any medical condition, occupational or nonoccupational, which dictates further medical examination or treatment.

(vi) Alternate physician determination mechanisms. The employer and an employee or authorized employee representative may agree upon the use of any expeditious alternate physician determination mechanism in lieu of the multiple physician review mechanism provided by this subsection so long as the alternate mechanism otherwise satisfies the requirements contained in this subsection.

(d) Chelation.

(i) The employer must ensure that any person whom he retains, employs, supervises or controls does not engage in prophylactic chelation of any employee at any time.

(ii) If therapeutic or diagnostic chelation is to be performed by any person in item (11)(d)(i), the employer must ensure that it be done under the supervision of a licensed physician in a clinical setting with thorough and appropriate medical monitoring and that the employee is notified in writing prior to its occurrence.

(12) **Medical removal protection**.

(a) Temporary medical removal and return of an employee.

(i) Temporary removal due to elevated blood lead levels.

(A) The employer must remove an employee from work having an exposure to lead at or above the action level on each occasion that a periodic and a follow-up blood sampling test conducted pursuant to this section indicate that the employee's blood lead level is at or above 60 µg/100 g of whole blood; and

(B) The employer must remove an employee from work having an exposure to lead at or above the action level on each occasion that the average of the last three blood sampling tests conducted pursuant to this section (or the average of all blood sampling tests conducted over the previous six months, whichever is longer) indicates that the employee's blood lead level is at or above 50 µg/100 g of whole blood; provided, however, that an employee need not be removed if the last blood sampling test indicates a blood lead level at or below 40 µg/100 g of whole blood.

(ii) Temporary removal due to a final medical determination.

(A) The employer must remove an employee from work having an exposure to lead at or above the action level on each occasion that a final medical determination results in a medical finding, determination, or opinion that the employee has a detected medical condition which places the employee at increased risk of material impairment to health from exposure to lead.

(B) For the purposes of this section, the phrase **"final medical determination"** shall mean the outcome of the multiple physician review mechanism or alternate medical determination mechanism used pursuant to the medical surveillance provisions of this section.

(C) Where a final medical determination results in any recommended special protective measures for an employee, or limitations on an employee's exposure to lead, the employer must implement and act consistent with the recommendation.

(iii) Return of the employee to former job status.

(A) The employer must return an employee to their former job status:

(I) For an employee removed due to a blood lead level at or above 60 µg/100 g, or due to an average blood lead level at or above 50 µg/100 g, when two consecutive blood sampling tests indicate that the employee's blood lead level is at or below 40 µg/100 g of whole blood;

(II) For an employee removed due to a final medical determination, when a subsequent final medical determination results in a medical finding, determination, or opinion that the employee no longer has a detected medical condition which places the employee at increased risk of material impairment to health from exposure to lead.

(B) For the purposes of this section, the requirement that an employer return an employee to their former job status is not intended to expand upon or restrict any rights an employee has or would have had, absent temporary medical removal, to a specific job classification or position under the terms of a collective bargaining agreement.

(iv) Removal of other employee special protective measure or limitations. The employer must remove any limitations placed on an employee or end any special protective measures provided to an employee pursuant to a final medical determination when a subsequent final medical determination indicates that the limitations or special protective measures are no longer necessary.

(v) Employer options pending a final medical determination. Where the multiple physician review mechanism, or alternate medical determination mechanism used pursuant to the medical surveillance provisions of this section, has not yet resulted in a final medical determination with respect to an employee, the employer must act as follows:

(A) Removal. The employer may remove the employee from exposure to lead, provide special protective measures to the employee, or place limitations upon the employee, consistent with the medical findings, determinations, or recommendations of any of the physicians who have reviewed the employee's health status.

(B) Return. The employer may return the employee to their former job status, end any special protective measures provided to the employee, and remove any limitations placed upon the employee, consistent with the medical findings, determinations, or recommendations of any of the physicians who have reviewed the employee's health status, with two exceptions. If:

(I) The initial removal, special protection, or limitation of the employee resulted from a final medical determination which differed from the findings, determinations, or recommendations of the initial physician; or

(II) The employee has been on removal status for the preceding eighteen months due to an elevated blood lead level, then the employer must await a final medical determination.

(b) Medical removal protection benefits.

(i) Provision of medical removal protection benefits. The employer must provide to an employee up to eighteen months of medical removal protection benefits on each occasion that an employee is removed from exposure to lead or otherwise limited pursuant to this section.

(ii) Definition of medical removal protection benefits. For the purposes of this section, the requirement that an employer provide medical removal protection benefits means that the employer must maintain the earnings, seniority and other employment rights and benefits of an employee as though the employee had not been removed from normal exposure to lead or otherwise limited.

(iii) Follow-up medical surveillance during the period of employee removal or limitation. During the period of time that an employee is removed from normal exposure to lead or otherwise limited, the employer may condition the provision of medical removal protection benefits upon the employee's participation in follow-up medical surveillance made available pursuant to this section.

(iv) Workers' compensation claims. If a removed employee files a claim for workers' compensation payments for a lead-related disability, then the employer must continue to provide medical removal protection benefits pending disposition of the claim. To the extent that an award is made to the employee for earnings lost during the period of removal, the employer's medical removal protection obligation must be reduced by such amount. The employer must not receive credit for workers' compensation payments received by the employee for treatment related expenses.

(v) Other credits. The employer's obligation to provide medical removal protection benefits to a removed employee shall be reduced to the extent that the employee receives compensation for earnings lost during the period of removal either from a publicly or employer-funded compensation program, or receives income from employment with another employer made possible by virtue of the employee's removal.

(vi) Employees whose blood lead levels do not adequately decline within eighteen months of removal. The employer must take the following measures with respect to any employee removed from exposure to lead due to an elevated blood lead level whose blood lead level has not declined within the past eighteen months of removal so that the employee has been returned to their former job status:

(A) The employer must make available to the employee a medical examination pursuant to this section to obtain a final medical determination with respect to the employee;

(B) The employer must ensure that the final medical determination obtained indicates whether or not the employee may be returned to their former job status, and if not, what steps should be taken to protect the employee's health;

(C) Where the final medical determination has not yet been obtained, or once obtained indicates that the employee may not yet be returned to their former job status, the employer must continue to provide medical removal protection benefits to the employee until either the employee is returned to former job status, or a final medical determination is made that the employee is incapable of ever safely returning to their former job status.

(D) Where the employer acts pursuant to a final medical determination which permits the return of the employee to their former job status despite what would otherwise be an unacceptable blood lead level, later questions concerning removing the employee again must be decided by a final medical determination. The employer need not automatically remove such an employee pursuant to the blood lead level removal criteria provided by this section.

(vii) Voluntary removal or restriction of an employee. Where an employer, although not required by this section to do so, removes an employee from exposure to lead or otherwise places limitations on an employee due to the effects of lead exposure on the employee's medical condition, the employer must provide medical removal protection benefits to the employee equal to that required by item (12)(b)(i) of this section.

(13) **Employee information and training**.

(a) Training program.

(i) Each employer who has a workplace in which there is a potential exposure to airborne lead at any level must inform employees of the content of Appendices A and B of this regulation.

(ii) The employer must train each employee who is subject to exposure to lead at or above the action level or for whom the possibility of skin or eye irritation exists, in accordance with the requirements of this section. The employer must institute a training program for and ensure the participation of all employees.

(iii) The employer must provide initial training by one hundred eighty days from the effective date for those employees covered by item (13)(a)(ii) on the standard's effective date and prior to the time of initial job assignment for those employees subsequently covered by this subsection.

(iv) The training program must be repeated at least annually for each employee.

(v) The employer must ensure that each employee is informed of the following:

(A) The content of this standard and its appendices;

(B) The specific nature of the operations which could result in exposure to lead above the action level;

(C) The purpose, proper use, limitations, and other training requirements for respiratory protection as required by chapter 296-842 WAC;

(D) The purpose and a description of the medical surveillance program, and the medical removal protection program including information concerning the adverse health effects associated with excessive exposure to lead (with particular attention to the adverse reproductive effects on both males and females);

(E) The engineering controls and work practices associated with the employee's job assignment;

(F) The contents of any compliance plan in effect; and

(G) Instructions to employees that chelating agents should not routinely be used to remove lead from their bodies and should not be used at all except under the direction of a licensed physician.

(b) Access to information and training materials.

(i) The employer must make readily available to all affected employees a copy of this standard and its appendices.

(ii) The employer must provide, upon request, all materials relating to the employee information and training program to the director.

(iii) In addition to the information required by item (13)(a)(v), the employer must include as part of the training program, and must distribute to employees, any materials pertaining to the Occupational Safety and Health Act, the regulations issued pursuant to the act, and this lead standard, which are made available to the employer by the director.

(14) **Communication of hazards**.

(a) Hazard communication-General.

(i) Chemical manufacturers, importers, distributors and employers must comply with all requirements of the Hazard Communication Standard (HCS), WAC 296-901-140 for lead.

(ii) In classifying the hazards of lead at least the following hazards are to be addressed: Reproductive/developmental toxicity; central nervous system effects; kidney effects; blood effects; and acute toxicity effects.

(iii) Employers must include lead in the hazard communication program established to comply with the HCS, WAC 296-901-140. Employers must ensure that each employee has access to labels on containers of lead and to safety data sheets, and is trained in accordance with the requirements of HCS and subsection (13) of this section.

(b) Signs.

(i) The employer must post the following warning signs in each work area where the PEL is exceeded:

DANGER
LEAD
MAY DAMAGE FERTILITY OR THE UNBORN CHILD
CAUSES DAMAGE TO THE CENTRAL NERVOUS SYSTEM
DO NOT EAT, DRINK OR SMOKE IN THIS AREA.

(ii) The employer must ensure that no statement appears on or near any sign required by this section which contradicts or detracts from the meaning of the required sign.

(iii) The employer must ensure that signs required by this subsection are illuminated and cleaned as necessary so that the legend is readily visible.

(iv) The employer may use signs required by other statutes, regulations or ordinances in addition to, or in combination with, signs required by this subsection.

(15) **Recordkeeping**.

(a) Exposure monitoring.

(i) The employer must establish and maintain an accurate record of all monitoring required in subsection (5) of this section.

(ii) This record must include:

(A) The date(s), number, duration, location and results of each of the samples taken, including a description of the sampling procedure used to determine representative employee exposure where applicable;

(B) A description of the sampling and analytical methods used and evidence of their accuracy;

(C) The type of respiratory protective devices worn, if any;

(D) Name, social security number, and job classification of the employee monitored and of all other employees whose exposure the measurement is intended to represent; and

(E) The environmental variables that could affect the measurement of employee exposure.

(iii) The employer must maintain these monitoring records for at least forty years or for the duration of employment plus twenty years, whichever is longer.

(b) Medical surveillance.

(i) The employer must establish and maintain an accurate record for each employee subject to medical surveillance as required by subsection (11) of this section.

(ii) This record must include:

(A) The name, social security number, and description of the duties of the employee;

(B) A copy of the physician's written opinions;

(C) Results of any airborne exposure monitoring done for that employee and the representative exposure levels supplied to the physician; and

(D) Any employee medical complaints related to exposure to lead.

(iii) The employer must keep, or ensure that the examining physician keeps, the following medical records:

(A) A copy of the medical examination results including medical and work history required under subsection (11) of this section;

(B) A description of the laboratory procedures and a copy of any standards or guidelines used to interpret the test results or references to that information; and

(C) A copy of the results of biological monitoring.

(iv) The employer must maintain or ensure that the physician maintains those medical records for at least forty years, or for the duration of employment plus twenty years, whichever is longer.

(c) Medical removals.

(i) The employer must establish and maintain an accurate record for each employee removed from current exposure to lead pursuant to subsection (12) of this section.

(ii) Each record must include:

(A) The name and social security number of the employee;

(B) The date on each occasion that the employee was removed from current exposure to lead as well as the corresponding date on which the employee was returned to their former job status;

(C) A brief explanation of how each removal was or is being accomplished; and

(D) A statement with respect to each removal indicating whether or not the reason for the removal was an elevated blood lead level.

(iii) The employer must maintain each medical removal record for at least the duration of an employee's employment.

(d) Availability.

(i) The employer must make available upon request all records required to be maintained by subsection (15) of this section to the director for examination and copying.

(ii) Environmental monitoring, medical removal, and medical records required by this subsection must be provided upon request to employees, designated representatives, and the assistant director in accordance with chapter 296-802 WAC. Medical removal records must be provided in the same manner as environmental monitoring records.

(iii) Upon request, the employer must make an employee's medical records required to be maintained by this section available to the affected employee or former employee or to a physician or other individual designated by such affected employee or former employees for examination and copying.

(e) Transfer of records.

The employer must comply with any additional requirements involving transfer of records set forth in WAC 296-802-60005.

(16) **Observation of monitoring**.

(a) Employee observation. The employer must provide affected employees or their designated representatives an opportunity to observe any monitoring of employee exposure to lead conducted pursuant to subsection (5) of this section.

(b) Observation procedures.

(i) Whenever observation of the monitoring of employee exposure to lead requires entry into an area where the use of respirators, protective clothing or equipment is required, the employer must provide the observer with and ensure the use of such respirators, clothing and such equipment, and must require the observer to comply with all other applicable safety and health procedures.

(ii) Without interfering with the monitoring, observers must be entitled to:

(A) Receive an explanation of the measurement procedures;

(B) Observe all steps related to the monitoring of lead performed at the place of exposure; and

(C) Record the results obtained or receive copies of the results when returned by the laboratory.

(17) **Appendices**. The information contained in the appendices to this section is not intended by itself, to create any additional obligations not otherwise imposed by this standard nor detract from any existing obligation.

(a) Appendix A. Substance Data Sheet for Occupational Exposure to Lead.

(i) Substance identification.

(A) Substance. Pure lead (Pb) is a heavy metal at room temperature and pressure and is a basic chemical element. It can combine with various other substances to form numerous lead compounds.

(B) Compounds covered by the standard. The word **"lead"** when used in this standard means elemental lead, all inorganic lead compounds (except those which are not biologically available due to either solubility or specific chemical interaction), and a class of organic lead compounds called lead soaps. This standard does not apply to other organic lead compounds.

(C) Uses. Exposure to lead occurs in at least 120 different occupations, including primary and secondary lead smelting, lead storage battery manufacturing, lead pigment manufacturing and use, solder manufacturing and use, shipbuilding and ship repairing, auto manufacturing, and printing.

(D) Permissible exposure. The Permissible Exposure Limit (PEL) set by the standard is 50 micrograms of lead per cubic meter of air (50 $\mu g/m^3$), averaged over an eight-hour work day.

(E) Action level. The standard establishes an action level of 30 micrograms per cubic meter of air (30 $\mu g/m^3$) time weighted average, based on an eight-hour work day. The action level initiates several requirements of the standard, such as exposure monitoring, medical surveillance, and training and education.

(ii) Health hazard data.

(A) Ways in which lead enters your body.

(I) When absorbed into your body in certain doses lead is a toxic substance. The object of the lead standard is to prevent absorption of harmful quantities of lead. The standard is intended to protect you not only from the immediate toxic effects of lead, but also from the serious toxic effects that may not become apparent until years of exposure have passed.

(II) Lead can be absorbed into your body by inhalation (breathing) and ingestion (eating). Lead (except for certain organic lead compounds not covered by the standard, such as tetraethyl lead) is not absorbed through your skin. When lead is scattered in the air as a dust, fume or mist, it can be inhaled and absorbed through your lungs and upper respiratory tract. Inhalation of airborne lead is generally the most important source of occupational lead absorption. You can also absorb lead through your digestive system if lead gets into your mouth and is swallowed. If you handle food, cigarettes, chewing tobacco, or make-up which have lead on them or handle them with hands contaminated with lead, this will contribute to ingestion.

(III) A significant portion of the lead that you inhale or ingest gets into your blood stream. Once in your blood stream lead is circulated throughout your body and stored in various organs and body tissues. Some of this lead is quickly filtered out of your body and excreted, but some remains in your blood and other tissue. As exposure to lead continues, the amount stored in your body will increase if you are absorbing more lead than your body is excreting. Even though you may not be aware of any immediate symptoms of disease, this lead stored in your tissues can be slowly causing irreversible damage, first to individual cells, then to your organs and whole body systems.

(B) Effects of overexposure to lead.

(I) Short-term (acute) overexposure. Lead is a potent, systemic poison that serves no known useful function once absorbed by your body. Taken in large enough doses, lead can kill you in a matter of days. A condition affecting the brain called acute encephalopathy may arise which develops quickly to seizures, coma, and death from cardiorespiratory arrest. A short-term dose of lead can lead to acute encephalopathy. Short-term occupational exposures of this magnitude are highly unusual, but not impossible. Similar forms of encephalopathy may, however arise from extended, chronic exposure to lower doses of lead. There is no sharp dividing line between rapidly developing acute effects of lead, and chronic effects which take longer to acquire. Lead adversely affects numerous body systems, and causes forms of health impairment and disease which arise after periods of exposure as short as days or as long as several years.

(II) Long-term (chronic) overexposure.

a) Chronic overexposure to lead may result in severe damage to your blood-forming, nervous, urinary and reproductive systems. Some common symptoms of chronic overexposure include loss of appetite, metallic taste in the mouth, anxiety, constipation, nausea, pallor, excessive tiredness, weakness, insomnia, headache, nervous irritability, muscle and joint pain or soreness, fine tremors, numbness, dizziness, hyperactivity and colic. In lead colic there may be severe abdominal pain.

b) Damage to the central nervous system in general and the brain (encephalopathy) in particular is one of the most severe forms of lead poisoning. The most severe, often fatal, form of encephalopathy may be preceded by vomiting, a feeling of dullness progressing to drowsiness and stupor, poor memory, restlessness, irritability, tremor, and convulsions. It may arise suddenly with the onset of seizures, followed by coma, and death. There is a tendency for muscular weakness to develop at the same time. This weakness may progress to paralysis often observed as a characteristic "wrist drop" or "foot drop" and is a manifestation of a disease to the nervous system called peripheral neuropathy.

c) Chronic overexposure to lead also results in kidney disease with few, if any, symptoms appearing until extensive and most likely permanent kidney damage has occurred. Routine laboratory tests reveal the presence of this kidney disease only after about two-thirds of kidney function is lost. When overt symptoms of urinary dysfunction arise, it is often too late to correct or prevent worsening conditions, and progression of kidney dialysis or death is possible.

d) Chronic overexposure to lead impairs the reproductive systems of both men and women. Overexposure to lead may result in decreased sex drive, impotence and sterility in men. Lead can alter the structure of sperm cells raising the risk of birth defects. There is evidence of miscarriage and stillbirth in women whose husbands were exposed to lead or who were exposed to lead themselves. Lead exposure also may result in decreased fertility, and abnormal menstrual cycles in women. The course of pregnancy may be adversely affected by exposure to lead since lead crosses the placental barrier and poses risks to developing fetuses. Children born of parents either one of whom were exposed to excess lead levels are more likely to have birth defects, mental retardation, behavioral disorders or die during the first year of childhood.

e) Overexposure to lead also disrupts the blood-forming system resulting in decreased hemoglobin (the substance in the blood that carries oxygen to the cells) and ultimately anemia. Anemiais characterized by weakness, pallor and fatigability as a result of decreased oxygen carrying capacity in the blood.

(III) Health protection goals of the standard.

a) Prevention of adverse health effects for most workers from exposure to lead throughout a working lifetime requires that worker blood lead (PbB) levels be maintained at or below forty micrograms per one hundred grams of whole blood (40 µg/100g). The blood lead levels of workers (both male and female workers) who intend to have children should be maintained below 30 µg/100g to minimize adverse reproductive health effects to the parents and to the developing fetus.

b) The measurement of your blood lead level is the most useful indicator of the amount of lead absorbed by your body. Blood lead levels (PbB) are most often reported in units of milligrams (mg) or micrograms (µg) of lead (1 mg = 1000 µg) per 100 grams (100g), 100 milliters (100 ml) or deciliter (dl) of blood. These three units are essentially the same. Sometimes PbB's are expressed in the form of mg% or µg%. This is a shorthand notation for 100g, 100ml, or dl.

c) PbB measurements show the amount of lead circulating in your blood stream, but do not give any information about the amount of lead stored in your various tissues. PbB measurements merely show current absorption of lead, not the effect that lead is having on your body or the effects that past lead exposure may have already caused. Past research into lead-related diseases, however, has focused heavily on associations between PbBs and various diseases. As a result, your PbB is an important indicator of the likelihood that you will gradually acquire a lead-related health impairment or disease.

d) Once your blood lead level climbs above 40 µg/100g, your risk of disease increases. There is a wide variability of individual response to lead, thus it is difficult to say that a particular PbB in a given person will cause a particular effect. Studies have associated fatal encephalopathy with PbBs as low as 150 µg/100g. Other studies have shown other forms of disease in some workers with PbBs well below 80 µg/100g. Your PbB is a crucial indicator of the risks to your health, but one other factor is extremely important. This factor is the length of time you have had elevated PbBs. The longer you have an elevated PbB, the greater the risk that large quantities of lead are being gradually stored in your organs and tissues (body burden). The greater your overall body burden, the greater the chances of substantial permanent damage.

e) The best way to prevent all forms of lead-related impairments and diseases--both short-term and long-term--is to maintain your PbB below 40 µg/100g. The provisions of the standard are designed with this end in mind. Your employer has prime responsibility to ensure that the provisions of the standard are complied with both by the company and by individual workers. You as a worker, however, also have a responsibility to assist your employer in complying with the standard. You can play a key role in protecting your own health by learning about the lead hazards and their control, learning what the standard requires, following the standard where it governs your own action, and seeing that your employer complies with the provisions governing his actions.

(IV) Reporting signs and symptoms of health problems. You should immediately notify your employer if you develop signs or symptoms associated with lead poisoning or if you desire medical advice concerning the effects of current or past exposure to lead on your ability to have a healthy child. You should also notify your employer if you have difficulty breathing during a respirator fit test or while wearing a respirator. In each of these cases your employer must make available to you appropriate medical examinations or consultations. These must be provided at no cost to you and at a reasonable time and place.

(b) Appendix B. Employee Standard Summary. This appendix summarizes key provisions of the standard that you as a worker should become familiar with. The appendix discusses the entire standard.

(i) Permissible exposure limit (PEL). The standard sets a permissible exposure limit (PEL) of fifty micrograms of lead per cubic meter of air (50 $\mu g/m^3$), averaged over and eight-hour workday. This is the highest level of lead in air to which you may be permissibly exposed over an eight-hour workday. Since it is an eight-hour average it permits short exposures above the PEL so long as for each eight-hour workday your average exposure does not exceed the PEL.

(ii) Exposure monitoring.

(A) If lead is present in the work place where you work in any quantity, your employer is required to make an initial determination of whether the action level is exceeded for any employee. The initial determination must include instrument monitoring of the air for the presence of lead and must cover the exposure of a representative number of employees who are reasonably believed to have the highest exposure levels. If your employer has conducted appropriate air sampling for lead in the past year he may use these results.

If there have been any employee complaints of symptoms which may be attributable to exposure to lead or if there is any other information or observations which would indicate employee exposure to lead, this must also be considered as part of the initial determination. If this initial determination shows that a reasonable possibility exists that any employee may be exposed, without regard to respirators, over the action level (30 $\mu g/m^3$) your employer must set up an air monitoring program to determine the exposure level of every employee exposed to lead at your work place.

(B) In carrying out this air monitoring program, your employer is not required to monitor the exposure of every employee, but they must monitor a representative number of employees and job types. Enough sampling must be done to enable each employee's exposure level to be reasonably represented by at least one full shift (at least seven hours) air sample. In addition, these air samples must be taken under conditions which represent each employee's regular, daily exposure to lead.

(C) If you are exposed to lead and air sampling is performed, your employer is required to quickly notify you in writing of air monitoring results which represent your exposure. If the results indicate your exposure exceeds the PEL (without regard to your use of respirators), then your employer must also notify you of this in writing, and provide you with a description of the corrective action that will be taken to reduce your exposure.

(D) Your exposure must be rechecked by monitoring every six months if your exposure is over the action level but below the PEL. Air monitoring must be repeated every three months if you are exposed over the PEL. Your employer may discontinue monitoring for you if two consecutive measurements, taken at least two weeks apart, are below the action level. However, whenever there is a production, process, control, or personnel change at your work place which may result in new or additional exposure to lead, or whenever there is any other reason to suspect a change which may result in new or additional exposure to lead, your employer must perform additional monitoring.

(iii) Methods of compliance. Your employer is required to ensure that no employee is exposed to lead in excess of the PEL. The standard establishes a priority of methods to be used to meet the PEL.

(iv) Respiratory protection.

(A) Your employer is required to provide and ensure your use of respirators when your exposure to lead is not controlled below the PEL by other means. The employer must pay the cost of the respirator. Whenever you request one, your employer is also required to provide you a respirator even if your air exposure level does not exceed the PEL. You might desire a respirator when, for example, you have received medical advice that your lead absorption should be decreased.

Or, you may intend to have children in the near future, and want to reduce the level of lead in your body to minimize adverse reproductive effects. While respirators are the least satisfactory means of controlling your exposure, they are capable of providing significant protection if properly chosen, fitted, worn, cleaned, maintained, and replaced when they stop providing adequate protection.

(B) Your employer is required to select respirators from the seven types listed in Table II of the respiratory protection section of this standard (see subsection (7)(c) of this section). Any respirator chosen must be certified by the National Institute for Occupational Safety and Health (NIOSH) under the provisions of 42 CFR part 84. This respirator selection table will enable your employer to choose a type of respirator which will give you a proper amount of protection based on your airborne lead exposure. Your employer may select a type of respirator that provides greater protection than that required by the standard; that is, one recommended for a higher concentration of lead than is present in your work place. For example, a powered air purifying respirator (PAPR) is much more protective than a typical negative-pressure respirator, and may also be more comfortable to wear. A PAPR has a filter, cartridge or canister to clean the air, and a power source which continuously blows filtered air into your breathing zone. Your employer might make a PAPR available to you to ease the burden of having to wear a respirator for long periods of time. The standard provides that you can obtain a PAPR upon request.

(C) Your employer must also start a respiratory protection program. This program must include written procedures for the proper selection, use, cleaning, storage, and maintenance of respirators.

(D) Your employer must ensure that your respirator facepiece fits properly. Proper fit of a respirator facepiece is critical to your protection against air borne lead. Obtaining a proper fit on each employee may require your employer to make available several different types of respirator masks. To ensure that your respirator fits properly and that facepiece leakage is minimal, your employer must give you either a qualitative or quantitative fit test as required in chapter 296-842 WAC.

(E) You must also receive from your employer proper training in the use of respirators. Your employer is required to teach you how to wear a respirator, to know why it is needed, and to understand its limitations.

(F) The standard provides that if your respirator uses filter elements, you must be given an opportunity to change the filter elements whenever an increase in breathing resistance is detected. You also must be permitted to periodically leave your work area to wash your face and respirator facepiece whenever necessary to prevent skin irritation. If you ever have difficulty breathing during a fit test or while using a respirator, your employer must make a medical examination available to you to determine whether you can safely wear a respirator. The result of this examination may be to give you a positive pressure respirator (which reduces breathing resistance) or to provide alternative means of protection.

(v) Protective work clothing and equipment. If you are exposed to lead above the PEL, or if you are exposed to lead compounds such as lead arsenate or lead azide which can cause skin and eye irritation, your employer must provide you with protective work clothing and equipment appropriate for the hazard. If work clothing is provided, it must be provided in a clean and dry condition at least weekly, and daily if your airborne exposure to lead is greater than 200 $\mu g/m^3$. Appropriate protective work clothing and equipment can include coveralls or similar full-body work clothing, gloves, hats, shoes or disposable shoe coverlets, and face shields or vented goggles. Your employer is required to provide all such equipment at no cost to you. They are is responsible for providing repairs and replacement as necessary and also is responsible for the cleaning, laundering or disposal of protective clothing and equipment. Contaminated work clothing or equipment must be removed in change rooms and not worn home or you will extend your exposure and expose your family since lead from your clothing can accumulate in your house, car, etc. Contaminated clothing which is to be cleaned, laundered or disposed of must be placed in closed containers in the change room. At no time may lead be removed from protective clothing or equipment by any means which disperses lead into the work room air.

(vi) Housekeeping. Your employer must establish a housekeeping program sufficient to maintain all surfaces as free as practicable of accumulations of lead dust. Vacuuming is the preferred method of meeting this requirement, and the use of compressed air to clean floors and other surfaces is absolutely prohibited. Dry or wet sweeping, shoveling, or brushing may not be used except where vacuuming or other equally effective methods have been tried and do not work. Vacuums must be used and emptied in a manner which minimizes the reentry of lead into the work place.

(vii) Hygiene facilities and practices.

(A) The standard requires that change rooms, showers and filtered air lunchrooms be constructed and made available to workers exposed to lead above the PEL. When the PEL is exceeded, the employer must ensure that food and beverage is not present or consumed, tobacco products are not present or used, and cosmetics are not applied, except in these facilities. Change rooms, showers and lunchrooms, must be used by workers exposed in excess of the PEL. After showering no clothing or equipment worn during the shift may be worn home and this includes shoes and underwear. Your own clothing worn during the shift should be carried home and cleaned carefully so that it does not contaminate your home. Lunchrooms may not be entered with protective clothing or equipment unless surface dust has been removed by vacuuming, downdraft booth or other cleaning methods. Finally, workers exposed above the PEL must wash both their hands and faces prior to eating, drinking, smoking or applying cosmetics.

(B) All of the facilities and hygiene practices just discussed are essential to minimize additional sources of lead absorption from inhalation or ingestion of lead that may accumulate on you, your clothes or your possessions. Strict compliance with these provisions can virtually eliminate several sources of lead exposure which significantly contribute to excessive lead absorption.

(viii) Medical surveillance.

(A) The medical surveillance program is part of the standard's comprehensive approach to the prevention of lead-related disease. Its purpose is to supplement the main thrust of the standard which is aimed at minimizing airborne concentrations of lead and sources of ingestion. Only medical surveillance can determine if the other provisions of the standard have effectively protected you as an individual. Compliance with the standard's provision will protect most workers from the adverse effects of lead exposure, but may not be satisfactory to protect individual workers (I) who have high body burdens of lead acquired over past years, (II) who have additional uncontrolled sources of nonoccupational lead exposure, (III) who exhibit unusual variations in lead absorption rates, or (IV) who have specific nonwork related medical conditions which could be aggravated by lead exposure (e.g., renal disease, anemia). In addition, control systems may fail, or hygiene and respirator programs may be inadequate. Periodic medical surveillance of individual workers will help detect those failures. Medical surveillance will also be important to protect your reproductive ability - regardless of whether you are a man or a woman.

(B) All medical surveillance required by the standard must be performed by or under the supervision of a licensed physician. The employer must provide required medical surveillance without cost to employees and at a reasonable time and place. The standard's medical surveillance program has two parts - periodic biological monitoring, and medical examinations.

(C) Your employer's obligation to offer medical surveillance is triggered by the results of the air monitoring program. Medical surveillance must be made available to all employees who are exposed in excess of the action level for more than 30 days a year. The initial phase of the medical surveillance program, which included blood lead level tests and medical examinations, must be completed for all covered employees no later than 180 days from the effective date of this standard. Priority within this first round of medical surveillance must be given to employees whom the employer believes to be at greatest risk from continued exposure (for example, those with the longest prior exposure to lead, or those with the highest current exposure). Thereafter, the employer must periodically make medical surveillance - both biological monitoring and medical examinations - available to all covered employees.

(D) Biological monitoring under the standard consists of blood lead level (PbB) and zinc protoporphyrin tests at least every six months after the initial PbB test. A zinc protoporphyrin (ZPP) test is a very useful blood test which measures an effect of lead on your body. If a worker's PbB exceeds 40 µg/100g, the monitoring frequency must be increased from every six months to at least every two months and not reduced until two consecutive PbBs indicate a blood lead level below 40 µg/100g. Each time your PbB is determined to be over 40µg/100g, your employer must notify you of this in writing within five working days of the receipt of the test results. The employer must also inform you that the standard requires temporary medical removal with economic protection when your PbB exceeds certain criteria (see Discussion of Medical Removal Protection - subsection (12)). During the first year of the standard, this removal criterion is 80 µg/100g. Anytime your PbB exceeds 80 µg/100g your employer must make available to you a prompt follow-up PbB test to ascertain your PbB. If the two tests both exceed 80 µg/100g and you are temporarily removed, then your employer must make successive PbB tests available to you on a monthly basis during the period of your removal.

(E) Medical examinations beyond the initial one must be made available on an annual basis if your blood lead levels exceeds 40 µg/100g at any time during the preceding year. The initial examination will provide information to establish a baseline to which subsequent data can be compared. An initial medical examination must also be made available (prior to assignment) for each employee being assigned for the first time to an area where the airborne concentration of lead equals or exceeds the action level. In addition, a medical examination or consultation must be made available as soon as possible if you notify your employer that you are experiencing signs or symptoms commonly associated with lead poisoning or that you have difficulty breathing while wearing a respirator or during a respirator fit test. You must also be provided a medical examination or consultation if you notify your employer that you desire medical advice concerning the effects of current or past exposure to lead on your ability to procreate a healthy child.

(F) Finally, appropriate follow-up medical examinations or consultations may also be provided for employees who have been temporarily removed from exposure under the medical removal protection provisions of the standard (see item (ix) below).

(G) The standard specifies the minimum content of preassignment and annual medical examinations. The content of other types of medical examinations and consultations is left up to the sound discretion of the examining physician. Preassignment and annual medical examinations must include (I) a detailed work history and medical history, (II) a thorough physical examination, and (III) a series of laboratory tests designed to check your blood chemistry and your kidney function. In addition, at any time upon your request, a laboratory evaluation of male fertility will be made (microscopic examination of a sperm sample), or a pregnancy test will be given.

(H) The standard does not require that you participate in any of the medical procedures, tests, etc., which your employer is required to make available to you. Medical surveillance can, however, play a very important role in protecting your health. You are strongly encouraged, therefore, to participate in a meaningful fashion. Generally, your employer will choose the physician who conducts medical surveillance under the lead standard - unless you and your employer can agree on the choice of a physician or physicians. Some companies and unions have agreed in advance, for example, to use certain independent medical laboratories or panels of physicians. Any of these arrangements are acceptable so long as required medical surveillance is made available to workers.

(I) The standard requires your employer to provide certain information to a physician to aid in their examination of you. This information includes (I) the standard and its appendices, (II) a description of your duties as they relate to lead exposure, (III) your exposure level, (IV) a description of personal protective equipment you wear, (V) prior blood level results, and (VI) prior written medical opinions concerning you that the employer has. After a medical examination or consultation the physician must prepare a written report which must contain (I) the physician's opinion as to whether you have any medical conditions which places you at increased risk of material impairment to health from exposure to lead, (II) any recommended special protective measures to be provided to you, (III) any blood lead level determinations, and (IV) any recommended limitation on your use of respirators. This last element must include a determination of whether you can wear a powered air purifying respirator (PAPR) if you are found unable to wear a negative pressure respirator.

(J) The medical surveillance program of the lead standard may at some point in time serve to notify certain workers that they have acquired a disease or other adverse medical condition as a result of occupational lead exposure. If this is true these workers might have legal rights to compensation from public agencies, their employers, firms that supply hazardous products to their employers, or other persons. Some states have laws, including worker compensation laws, that disallow a worker to learn of a job-related health impairment to sue, unless the worker sues within a short period of time after learning of the impairment. (This period of time may be a matter of months or years.) An attorney can be consulted about these possibilities. It should be stressed that WISHA is in no way trying to either encourage or discourage claims or lawsuits. However, since results of the standard's medical surveillance program can significantly affect the legal remedies of a worker who has acquired a job-related disease or impairment, it is proper for WISHA to make you aware of this.

(K) The medical surveillance section of the standard also contains provisions dealing with chelation. Chelation is the use of certain drugs (administered in pill form or injected into the body) to reduce the amount of lead absorbed in body tissues. Experience accumulated by the medical and scientific communities has largely confirmed the effectiveness of this type of therapy for the treatment of very severe lead poisoning. On the other hand it has also been established that there can be a long list of extremely harmful side effects associated with the use of chelating agents. The medical community has balanced the advantages and disadvantages resulting from the use of chelating agents in various circumstances and has established when the use of these agents is acceptable. The standard includes these accepted limitations due to a history of abuse of chelation therapy by some lead companies. The most widely used chelating agents are calcium disodium EDTA, (Ca Na2EDTA), Calcium Disodium Versenate (Versenate), and d-penicillamine (penicillamine or Cupramine).

(L) The standard prohibits “prophylactic chelation” of any employee by any person the employer retains, supervises or controls. “Prophylactic chelation” is the routine use of chelating or similarly acting drugs to prevent elevated blood levels in workers who are occupationally exposed to lead, or the use of these drugs to routinely lower blood lead levels to predesignated concentrations believed to be safe. It should be emphasized that where an employer takes a worker who has no symptoms of lead poisoning and has chelation carried out by a physician (either inside or outside of a hospital) solely to reduce the worker's blood lead level, that will generally be considered prophylactic chelation. The use of a hospital and a physician does not mean that prophylactic chelation is not being performed. Routine chelation to prevent increased or reduce current blood lead levels is unacceptable whatever the setting.

(M) The standard allows the use of “therapeutic” or “diagnostic” chelation if administered under the supervision of a licensed physician in a clinical setting with thorough and appropriate medical monitoring. Therapeutic chelation responds to severe lead poisoning where there are marked symptoms. Diagnostic chelation, involves giving a patient a dose of the drug then collecting all urine excreted for some period of time as an aid to the diagnosis of lead poisoning.

(N) In cases where the examining physician determines that chelation is appropriate, you must be notified in writing of this fact before such treatment. This will inform you of a potentially harmful treatment, and allow you to obtain a second opinion.

(ix) Medical removal protection.

(A) Excessive lead absorption subjects you to increased risk of disease. Medical removal protection (MRP) is a means of protecting you when for whatever reasons, other methods, such as engineering controls, work practices, and respirators, have failed to provide the protection you need. MRP involves the temporary removal of a worker from their regular job to a place of significantly lower exposure without any loss of earnings, seniority, or other employment rights of benefits. The purpose of this program is to cease further lead absorption and allow your body to naturally excrete lead which has previously been absorbed. Temporary medical removal can result from an elevated blood lead level, or a medical opinion. Up to eighteen months of protection is provided as a result of either form of removal. The vast majority of removed workers, however, will return to their former jobs long before this eighteen month period expires. The standard contains special provisions to deal with the extraordinary but possible case where a long-term worker's blood lead level does not adequately decline during eighteen months of removal.

(B) During the first year of the standard, if your blood lead level is 80 µg/100g or above you must be removed from any exposure where your air lead level without a respirator would be 100 $\mu g/m^3$ or above. If you are removed from your normal job you may not be returned until your blood lead level declines to at least 60 µg/100g. These criteria for removal and return will change according to the following schedule:

Table 1

Effective Date	Removal Blood Level (µg/100g)	Air Lead ($\mu g/m^3$)	Return Blood Lead ($\mu g/m^3$)
09/06/81	At or above 70	50 or above	At or below 50
09/06/82	At or above 60	30 or above	At or below 40
09/06/84	At or above 50 averaged over six months	30 or above	At or below 40

(C) You may also be removed from exposure even if your blood lead levels are below these criteria if a final medical determination indicates that you temporarily need reduced lead exposure for medical reasons. If the physician who is implementing your employers medical program makes a final written opinion recommending your removal or other special protective measures, your employer must implement the physician's recommendation. If you are removed in this manner, you may only be returned when the physician indicates it is safe for you to do so.

(D) The standard does not give specific instructions dealing with what an employer must do with a removed worker. Your job assignment upon removal is a matter for you, your employer and your union (if any) to work out consistent with existing procedures for job assignments. Each removal must be accomplished in a manner consistent with existing collective bargaining relationships. Your employer is given broad discretion to implement temporary removals so long as no attempt is made to override existing agreements. Similarly, a removed worker is provided no right to veto an employer's choice which satisfies the standard.

(E) In most cases, employers will likely transfer removed employees to other jobs with sufficiently low lead exposure. Alternatively, a worker's hours may be reduced so that the time weighted average exposure is reduced, or he or she may be temporarily laid off if no other alternative is feasible.

(F) In all of these situations, MRP benefits must be provided during the period of removal - i.e., you continue to receive the same earnings, seniority, and other rights and benefits you would have had if you had not been removed. Earnings include more than just your base wage; it includes overtime, shift differentials, incentives, and other compensation you would have earned if you had not been removed. During the period of removal you must also be provided with appropriate follow-up medical surveillance. If you were removed because your blood lead level was too high, you must be provided with a monthly blood test. If a medical opinion caused your removal, you must be provided medical tests or examinations that the physician believes to be appropriate. If you do not participate in this follow-up medical surveillance, you may lose your eligibility for MRP benefits.

(G) When you are medically eligible to return to your former job, your employer must return you to your “former job status.” This means that you are entitled to the position, wages, benefits, etc., you would have had if you had not been removed. If you would still be in your old job if no removal had occurred, that is where you go back. If not, you are returned consistent with whatever job assignment discretion your employer would have had if no removal had occurred. MRP only seeks to maintain your rights, not expand them or diminish them.

(H) If you are removed under MRP and you are also eligible for worker compensation or other compensation for lost wages, your employer's MRP benefits obligation is reduced by the amount that you actually receive from these other sources. This is also true if you obtain other employment during the time you are laid off with MRP benefits.

(I) The standard also covers situations where an employer voluntarily removes a worker from exposure to lead due to the effects of lead on the employee's medical condition, even though the standard does not require removal. In these situations MRP benefits must still be provided as though the standard required removal. Finally, it is important to note that in all cases where removal is required, respirators cannot be used as a substitute. Respirators may be used before removal becomes necessary, but not as an alternative to a transfer to a low exposure job, or to a lay-off with MRP benefits.

(x) Employee information and training.

(A) Your employer is required to provide an information and training program for all employees exposed to lead above the action level or who may suffer skin or eye irritation from lead. This program must inform these employees of the specific hazards associated with their work environment, protective measures which can be taken, the danger of lead to their bodies (including their reproductive systems), and their rights under the standard. In addition, your employer must make readily available to all employees, included those exposed below the action level, a copy of the standard and its appendices and must distribute to all employees any materials provided to the employer under the Washington Industrial Safety and Health Act (WISHA).

(B) Your employer is required to complete this training for all employees by March 4, 1981. After this date, all new employees must be trained prior to initial assignment to areas where there is possibility of exposure over the action level. This training program must also be provided at least annually thereafter.

(xi) Signs. The standard requires that the following warning sign be posted in work areas where the exposure to lead exceeds the PEL:

DANGER LEAD
MAY DAMAGE FERTILITY OR THE UNBORN CHILD
CAUSES DAMAGE TO THE CENTRAL NERVOUS SYSTEM
DO NOT EAT, DRINK OR SMOKE IN THIS AREA

(xii) Recordkeeping.

(A) Your employer is required to keep all records of exposure monitoring for airborne lead. These records must include the name and job classification of employees measured, details of the sampling and analytic techniques, the results of this sampling and the type of respiratory protection being worn by the person sampled. Your employer is also required to keep all records of biological monitoring and medical examination results. These must include the names of the employees, the physician's written opinion and a copy of the results of the examination. All of the above kinds of records must be kept for 40 years, or for at least 20 years after your termination of employment, whichever is longer.

(B) Recordkeeping is also required if you are temporarily removed from your job under the MRP program. This record must include your name and social security number, the date of your removal and return, how the removal was or is being accomplished, and whether or not the reason for the removal was an elevated blood lead level. Your employer is required to keep each medical removal record only for as long as the duration of an employee's employment.

(C) The standard requires that if you request to see or copy environmental monitoring, blood lead level monitoring, or medical removal records, they must be made available to you or to a representative that you authorize. Your union also has access to these records. Medical records other than PbBs must also be provided to you upon request, to your physician or to any other person whom you may specifically designate. Your union does not have access to your personal medical records unless you authorize their access.

(xiii) Observations of monitoring. When air monitoring for lead is performed at your work place as required by this standard, your employer must allow you or someone you designate to act as an observer of the monitoring. Observers are entitled to an explanation of the measurement procedure, and to record the results obtained. Since results will not normally be available at the time of the monitoring, observers are entitled to record or receive the results of the monitoring when returned by the laboratory. Your employer is required to provide the observer with any personal protective devices required to be worn by employees working in the areas that is being monitored. The employer must require the observer to wear all such equipment and to comply with all other applicable safety and health procedures.

(xiv) Effective date. The standard's effective date is September 6, 1980, and the employer's obligation under the standard begin to come into effect as of that date. The standard was originally adopted as WAC 296-62-07349 and later recodified to WAC 296-62-07521.

(c) Appendix C. Medical Surveillance Guidelines.

(i) Introduction.

(A) The primary purpose of the Washington Industrial Safety and Health Act of 1973 is to ensure, so far as possible, safe and healthful working conditions for every working man and woman. The occupational health standard for inorganic lead* was promulgated to protect workers exposed to inorganic lead including metallic lead, all inorganic lead compounds and organic lead soaps.

*The term inorganic lead used throughout the medical surveillance appendices is meant to be synonymous with the definition of lead set forth in the standard.

(B) Under this final standard in effect as of September 6, 1980, occupational exposure to inorganic lead is to be limited to 50 $\mu g/m^3$ (micrograms per cubic meter) based on an 8-hour time-weighted average (TWA). This level of exposure eventually must be achieved through a combination of engineering, work practice and other administrative controls. Periods of time ranging from one to 10 years are provided for different industries to implement these controls which are based on individual industry considerations. Until these controls are in place, respirators must be used to meet the 50 $\mu g/m^3$ exposure limit.

(C) The standard also provides for a program of biological monitoring and medical surveillance for all employees exposed to levels of inorganic lead above the action level of 30 $\mu g/m^3$ for more than thirty days per year.

(D) The purpose of this document is to outline the medical surveillance provisions of the standard for inorganic lead, and to provide further information to the physician regarding the examination and evaluation of workers exposed to inorganic lead.

(E) Item (ii) provides a detailed description of the monitoring procedure including the required frequency of blood testing for exposed workers, provisions for medical removal protection (MRP), the recommended right of the employee to a second medical opinion, and notification and recordkeeping requirements of the employer.

A discussion of the requirements for respirator use and respirator monitoring and WISHA's position on prophylactic chelation therapy are also included in this section.

(F) Item (iii) discusses the toxic effects and clinical manifestations of lead poisoning and effects of lead intoxication on enzymatic pathways in heme synthesis. The adverse effects on both male and female reproductive capacity and on the fetus are also discussed.

(G) Item (iv) outlines the recommended medical evaluation of the worker exposed to inorganic lead including details of the medical history, physical examination, and recommended laboratory tests, which are based on the toxic effects of lead as discussed in item (ii).

(H) Item (v) provides detailed information concerning the laboratory tests available for the monitoring of exposed workers. Included also is a discussion of the relative value of each test and the limitations and precautions which are necessary in the interpretation of the laboratory results.

(I) Airborne levels to be achieved without reliance or respirator protection through a combination of engineering and work practice or other administrative controls are illustrated in the following table:

Industry		***Permissible Lead Level/Compliance Date***	
	200µg/m³	**100µg/m³**	**50µg/m³**
Primary Lead Production.	1973	06/29/84	06/29/91
Secondary Lead Production.	1973	06/29/84	06/29/91
Lead Acid Battery Manufacturing.	1973	06/29/83	06/29/91
Automobile Mfg.,/ Solder, Grinding.	1973	N/A	03/08/97
Electronics, Gray Iron Foundries, Ink Mfg., Paints and Coatings Mfg., Can Mfg., Wallpaper Mfg., and Printing.	1973	N/A	06/29/91
Lead chemical Mfg., Nonferrous Foundries, Leaded Steel Mfg., Battery Breaking in the Collection and Processing of Scrap (when not a part of secondary lead smelter), Secondary Copper Smelter, Brass and Bronze Ingot Production.	1973	N/A	N/A[1]*
All Other Industries.	1973	N/A	09/08/92

* Feasibility of achieving the PEL by engineering and work practice controls for these industries has yet to be resolved in court, therefore no date has been scheduled.

(ii) Medical surveillance and monitoring requirements for workers exposed to inorganic lead.

(A) Under the occupational health standard for inorganic lead, a program of biological monitoring and medical surveillance is to be made available to all employees exposed to lead above the action level of 30 µg/m^3 TWA for more than thirty days each year. This program consists of periodic blood sampling and medical evaluation to be performed on a schedule which is defined by previous laboratory results, worker complaints or concerns, and the clinical assessment of the examining physician.

(B) Under this program, the blood lead level of all employees who are exposed to lead above the action level of 30 µg/m^3 is to be determined at least every six months. The frequency is increased to every two months for employees whose last blood lead level was between 40µg/100g whole blood and the level requiring employee medical removal to be discussed below. For employees who are removed from exposure to lead due to an elevated blood lead, a new blood lead level must be measured monthly. Zinc protoporphyrin (ZPP) measurement is required on each occasion that a blood lead level measurement is made.

(C) An annual medical examination and consultation performed under the guidelines discussed in item (iv) is to be made available to each employee for whom a blood test conducted at any time during the preceding twelve months indicated a blood lead level at or above 40µg/100g. Also, an examination is to be given to all employees prior to their assignment to an area in which airborne lead concentrations reach or exceed the action level. In addition, a medical examination must be provided as soon as possible after notification by an employee that the employee has developed signs or symptoms commonly associated with lead intoxication, that the employee desires medical advice regarding lead exposure and the ability to procreate a healthy child, or that the employee has demonstrated difficulty in breathing during a respirator fitting test or during respirator use. An examination is also to be made available to each employee removed from exposure to lead due to a risk of sustaining material impairment to health, or otherwise limited or specially protected pursuant to medical recommendations.

(D) Results of biological monitoring or the recommendations of an examining physician may necessitate removal of an employee from further lead exposure pursuant to the standard's medical removal program (MRP). The object of the MRP program is to provide temporary medical removals to workers either with substantially elevated blood lead levels or otherwise at risk of sustaining material health impairment from continued substantial exposure to lead. The following guidelines which are summarized in Table 10 were created under the standard for the temporary removal of an exposed employee and their subsequent return to work in an exposure area.

Table 10 Effective Date					
	Sept. 6, 1980	**Sept. 6, 1981**	**Sept. 6, 1982**	**Sept. 6, 1983**	**Sept. 6, 1984**
A. Blood lead level requiring employee medical removal (level must be confirmed with second follow-up blood lead level within two weeks of first report).	>80 µg/100g.	>70 µg/100g.	>60 µg/100g.	>60 µg/100g.	>60 µg/100g or average of last three blood samples or all blood samples over previous 6 months (whichever is over a longer time period) is 50 µg/100g or greater unless last sample is 40 µg/100g or less.
B. Frequency which employees exposed is action level of lead (30 µg/m^8 TWA) must have blood lead level checked. (ZPP is also required in each occasion that a blood test is obtained):					
1. Last blood lead level less than 40 µg/100g.	Every 6 months	Every 6 months.	Every 6 months.	Every 6 months.	Every 6 months.

Table 10 Effective Date					
	Sept. 6, 1980	**Sept. 6, 1981**	**Sept. 6, 1982**	**Sept. 6, 1983**	**Sept. 6, 1984**
2. Last blood lead level between 40 µg/100g and level requiring medical removal (see A above).	Every 2 months.	Every 2 months.	Every 2 months.	Every two months.	Every 2 months.
3. Employees removed from exposure to lead because of an elevated blood lead level.	Every 1 month.	Every 1 month.	Every 1 month.	Every 1 month.	Every 1 month.
C. Permissible airborne exposure limit for workers removed from work due to an elevated blood lead level (without regard to respirator protection.	100 µg/m^3 8 hr TWA	50 µg/m^3 8 hr TWA	30 µg/m^3 8 hr TWA	30 µg/m^3 8 hr TWA	30 µg/m^3 8 hr TWA
D. Blood lead level confirmed with a second blood analysis, at which employee may return to work. Permissible exposure without regard to respirator protection is listed by industry in Table 1	60 µg/100g	50 µg/100g	40 µg/100g	40 µg/100g	40 µg/100g

Note: Where medical opinion indicates that an employee is at risk of material impairment from exposure to lead, the physician can remove an employee from exposure exceeding the action level (or less) or recommend special protective measures as deemed appropriate and necessary. Medical monitoring during the medical removal period can be more stringent than noted in the table above if the physician so specifies. Return to work or removal of limitations and special protections is permitted when the physician indicates that the worker is no longer at risk of material impairment.

(E) Under the standard's ultimate worker removal criteria, a worker is to be removed from any work having any eight-hour TWA exposure to lead of 30 $\mu g/m^3$or more whenever either of the following circumstances apply. (I) a blood lead level of 60 µg/100g or greater is obtained and confirmed by a second follow-up blood lead level performed within two weeks after the employer receives the results of the first blood sample test, or (II) the average of the previous three blood lead determinations or the average of all blood lead determinations conducted during the previous six months, whichever encompasses the longest time period, equals or exceeds 50 µg/100g, unless the last blood sample indicates a blood lead level at or below 40 µg/100g, in which case the employee need not be removed. Medical removal is to continue until two consecutive blood lead levels are 40 µg/100g or less.

(F) During the first two years that the ultimate removal criteria are being phased in, the return criteria have been set to ensure that a worker's blood lead level has substantially declined during the period of removal. From March 1, 1979, to March 1, 1980, the blood lead level requiring employee medial removal is 80 µg/100g. Workers found to have a confirmed blood lead at this level or greater need only be removed from work having a daily eight hour TWA exposure to lead at or above 100 $\mu g/m^3$. Workers so removed are to be returned to work when their blood lead levels are at or below 60 µg/100g of whole blood. From March 1, 1980, to March 1, 1981, the blood lead level requiring medical removal is 70 µg/100g. During this period workers need only be removed from jobs having a daily eight hour TWA exposure to lead at or above 50 $\mu g/m^3$ and are to be returned to work when a level of 50 µg/100g is achieved. Beginning March 1, 1981, return depends on the worker's blood lead level declining to 40 µg/100g of whole blood.

(G) As part of the standard, the employer is required to notify in writing each employee whose whole blood lead level exceeds 40 µg/100g. In addition, each such employee is to be informed that the standard requires medical removal with MRP benefits, discussed below, when an employee's blood lead level exceeds the above defined limits.

(H) In addition to the above blood lead level criteria, temporary worker removal may also take place as a result of medical determinations and recommendations.

Written medical opinions must be prepared after each examination pursuant to the standard. If the examining physician includes medical finding, determination or opinion that the employee has a medical condition which places the employee at increased risk of material health impairment from exposure to lead, then the employee must be removed from exposure to lead at or above the action level. Alternatively, if the examining physician recommends special protective measures for an employee (e.g., use of a powered air purifying respirator) or recommends limitations on an employee's exposure to lead, then the employer must implement these recommendations. Recommendations may be more stringent than the specific provisions of the standard. The examining physician, therefore, is given broad flexibility to tailor special protective procedures to the needs of individual employees. This flexibility extends to the evaluation and management of pregnant workers and male and female workers who are planning to conceive children. Based on the history, physical examination, and laboratory studies, the physician might recommend special protective measures or medical removal for an employee who is pregnant or who is planning to conceive a child when, in the physician's judgment, continued exposure to lead at the current job would pose a significant risk. The return of the employee to their former job status, or the removal of special protections or limitations, depends upon the examining physician determining that the employee is no longer at increased risk of material impairment or that the special measures are no longer needed.

(I) During the period of any form of special protection or removal, the employer must maintain the worker's earnings, seniority, and other employment rights and benefits (as though the worker has not been removed) for a period of up to eighteen months. This economic protection will maximize meaningful worker participation in the medical surveillance program, and is appropriate as part of the employer’s overall obligation to provide a safe and healthful work place. The provisions of MRP benefits during the employee's removal period may, however, be conditioned upon participation in medical surveillance.

(J) On rare occasions, an employee's blood lead level may not acceptably decline within eighteen months of removal. This situation will arise only in unusual circumstances, thus the standard relies on an individual medical examination to determine how to protect such an employee. This medical determination is to be based on both laboratory values, including lead levels, zinc protoporphyrin levels, blood counts, and other tests felt to be warranted, as well as the physician's judgment that any symptoms or findings on physical examination are a result of lead toxicity. The medical determination may be that the employee is incapable of ever safely returning to their former job status. The medical determination may provide additional removal time past eighteen months for some employees or specify special protective measures to be implemented.

(K) The lead standard provides for a multiple physician review in cases where the employee wishes a second opinion concerning potential lead poisoning or toxicity. If an employee wishes a second opinion, they can make an appointment with a physician of their choice. This second physician will review the findings, recommendations or determinations of the first physician and conduct any examinations, consultations or tests deemed necessary in an attempt to make a final medical determination. If the first and second physicians do not agree in their assessment they must try to resolve their differences. If they cannot reach an agreement then they must designate a third physician to resolve the dispute.

(L) The employer must provide examining and consulting physicians with the following specific information: A copy of the lead regulations and all appendices, a description of the employee's duties as related to exposure, the exposure level to lead and any other toxic substances (if applicable), a description of personal protective equipment used, blood lead levels, and all prior written medical opinions regarding the employee in the employer's possession or control. The employer must also obtain from the physician and provide the employee with a written medical opinion containing blood lead levels, the physician's opinion as to whether the employee is at risk of material impairment to health, any recommended protective measures for the employee if further exposure is permitted, as well as any recommended limitations upon an employee's use of respirators.

(M) Employers must instruct each physician not to reveal to the employer in writing or in any other way their findings, laboratory results, or diagnoses which are felt to be unrelated to occupational lead exposure. They must also instruct each physician to advise the employee of any occupationally or nonoccupationally related medical condition requiring further treatment or evaluation.

(N) The standard provides for the use of respirators when engineering and other primary controls have not been fully implemented. However, the use of respirator protection must not be used in lieu of temporary medical removal due to elevated blood lead levels or findings that an employee is at risk of material health impairment. This is based on the numerous inadequacies of respirators including skin rash where the facepiece makes contact with the skin, unacceptable stress to breathing in some workers with underlying cardiopulmonary impairment, difficulty in providing adequate fit, the tendency for respirators to create additional hazards by interfering with vision, hearing, and mobility, and the difficulties of ensuring the maximum effectiveness of a complicated work practice program involving respirators. Respirators do, however, serve a useful function where engineering and work practice are inadequate by providing interim or short-term protection, provided they are properly selected for the environment in which the employee will be working, properly fitted to the employee, maintained and cleaned periodically, and worn by the employee when required.

(O) In its final standard on occupational exposure to inorganic lead, WISHA has prohibited prophylactic chelation. Diagnostic and therapeutic chelation are permitted only under the supervision of a licensed physician with appropriate medical monitoring in an acceptable clinical setting. The decision to initiate chelation therapy must be made on an individual basis and take into account the severity of symptoms felt to be a result of lead toxicity along with blood lead levels, ZPP levels and other laboratory tests as appropriate. EDTA and penicillamine, which are the primary chelating agents used in the therapy of occupational lead poisoning, have significant potential side effects and their use must be justified on the basis of expected benefits to the worker.

(P) Unless frank and severe symptoms are present, therapeutic chelation is not recommended given the opportunity to remove a worker from exposure and allow the body to naturally excrete accumulated lead. As a diagnostic aid, the chelation mobilization test using CA-EDTA has limited applicability. According to some investigators, the tests can differentiate between lead-induced and other nephropathies. The test may also provide an estimation of the mobile fraction of the total body lead burden.

(Q) Employers are required to ensure that accurate records are maintained on exposure monitoring, medical surveillance, and medical removal for each employee. Exposure monitoring and medical surveillance records must be kept for forty years or the duration of employment plus twenty years, whichever is longer, while medical removal records must be maintained for the duration of employment. All records required under the standard must be made available upon request to representatives of the director of the department of labor and industries. Employers must also make environmental and biological monitoring and medical removal records available to affected employees and to former employees or their authorized employee representatives. Employees or their specifically designated representatives have access to their entire medical surveillance records.

(R) In addition, the standard requires that the employer inform all workers exposed to lead at or above the action level of the provisions of the standard and all its appendices, the purpose and description of medical surveillance and provisions for medical removal protection if temporary removal is required. An understanding of the potential health effects of lead exposure by all exposed employees along with full understanding of their rights under the lead standard is essential for an effective monitoring program.

(iii) Adverse health effects of inorganic lead.

(A) Although the toxicity of lead has been known for 2,000 years, the knowledge of the complex relationship between lead exposure and human response is still being refined.

Significant research into the toxic properties of lead continues throughout the world, and it should be anticipated that our understanding of thresholds of effects and margins of safety will be improved in future years. The provisions of the lead standard are founded on two prime medical judgments; first, the prevention of adverse health effects from exposure to lead throughout a working lifetime requires that worker blood lead levels be maintained at or below 40 µg/100g, and second, the blood lead levels of workers, male or female, who intend to parent in the near future should be maintained below 30 µg/100g to minimize adverse reproduction health effects to the parent and developing fetus. The adverse effects of lead on reproduction are being actively researched and WISHA encourages the physician to remain abreast of recent developments in the area to best advise pregnant workers or workers planning to conceive children.

(B) The spectrum of health effects caused by lead exposure can be sub-divided into five developmental states; normal, physiological changes of uncertain significance, pathophysiological changes, overt symptoms (morbidity), and mortality. Within this process there are no sharp distinctions, but rather a continuum of effects. Boundaries between categories overlap due to the wide variation of individual responses and exposures in the working population. WISHA's development of the lead standard focused on pathophysiological changes as well as later stages of disease.

(I) Heme synthesis inhibition.

a) The earliest demonstrated effect of lead involves its ability to inhibit at least two enzymes of the heme synthesis pathway at very low blood levels. Inhibition of delta aminolevulinic acid dehydrase (ALA-D) which catalyzes the conversion of delta-aminolevulinic acid (ALA) to protoporphyrin is observed at a blood lead level below 20µg/100g whole blood. At a blood lead level of 40 µg/100g, more than twenty percent of the population would have seventy percent inhibition of ALA-D. There is an exponential increase in ALA excretion at blood lead levels greater than 40 µg/100g.

b) Another enzyme, ferrochelatase, is also inhibited at low blood lead levels. Inhibition of ferrochelatase leads to increased free erythrocyte protoporphyrin (FEP) in the blood which can then bind to zinc to yield zinc protoporphyrin. At a blood lead level of 50µg/100g or greater, nearly 100 percent of the population will have an increase FEP. There is also an exponential relationship between blood lead levels greater than 40 µg/100g and the associated ZPP level, which has led to the development of the ZPP screening test for lead exposure.

c) While the significance of these effects is subject to debate, it is WISHA's position that these enzyme disturbances are early stages of a disease process which may eventually result in the clinical symptoms of lead poisoning. Whether or not the effects do progress to the later stages of clinical disease, disruption of these enzyme processes over a working lifetime is considered to be a material impairment of health.

d) One of the eventual results of lead-induced inhibition of enzymes in the heme synthesis pathway is anemia which can be asymptomatic if mild but associated with a wide array of symptoms including dizziness, fatigue, and tachycardia when more severe. Studies have indicated that lead levels as low as 50 µg/100g can be associated with a definite decreased hemoglobin, although most cases of lead-induced anemia, as well as shortened red-cell survival times, occur at lead levels exceeding 80 µg/100g. Inhibited hemoglobin synthesis is more common in chronic cases whereas shortened erythrocyte life span is more common in acute cases.

e) In lead-induced anemias, there is usually a reticulocytosis along with the presence of basophilic stippling, and ringed sideroblasts, although none of the above are pathognomonic for lead-induced anemia.

(II) Neurological effects.

a) Inorganic lead had been found to have toxic effects on both the central and peripheral nervous systems. The earliest stage of lead-induced central nervous system effects first manifest themselves in the form of behavioral disturbances and central nervous system symptoms including irritability, restlessness, insomnia and other sleep disturbances, fatigue, vertigo, headache, poor memory, tremor, depression, and apathy. With more severe exposure, symptoms can progress to drowsiness, stupor, hallucinations, delirium, convulsions and coma.

b) The most severe and acute form of lead poisoning which usually follows ingestion or inhalation of large amounts of lead is acute encephalopathy which may arise precipitously with the onset of intractable seizures, coma, cardiorespiratory arrest, and death within 48 hours.

c) While there is disagreement about what exposure levels are needed to produce the earliest symptoms, most experts agree that symptoms definitely can occur at blood lead levels of 60 µg/100g whole blood and therefore recommend a 40 µg/100g maximum. The central nervous system effects frequently are not reversible following discontinued exposure or chelation therapy and when improvement does occur, it is almost always only partial.

d) The peripheral neuropathy resulting from lead exposure characteristically involves only motor function with minimal sensory damage and has a marked predilection for the extensor muscles of the most active extremity. The peripheral neuropathy can occur with varying degrees of severity. The earliest and mildest form which can be detected in workers with blood lead levels as low as 50 µg/100g is manifested by slowing or motor nerve conduction velocity often without clinical symptoms. With progression of the neuropathy there is development of painless extensor muscle weakness usually involving the extensor muscles of the fingers and hand in the most active upper extremity, followed in severe cases by wrist drop, much less commonly, foot drop.

e) In addition to slowing of nerve conduction, electromyographical studies in patients with blood lead levels greater than 50 µg/100g have demonstrated a decrease in the number of acting motor unit potentials, an increase in the duration of motor unit potentials, and spontaneous pathological activity including fibrillations and fasciculation. Whether these effects occur at levels of 40 µg/100g is undetermined.

f) While the peripheral neuropathies can occasionally be reversed with therapy, again such recovery is not ensured particularly in the more severe neuropathies and often improvement is only partial. The lack of reversibility is felt to be due in part to segmental demyelination.

(III) Gastrointestinal. Lead may also effect the gastrointestinal system producing abdominal colic or diffuse abdominal pain, constipation, obstipation, diarrhea, anorexia, nausea and vomiting. Lead colic rarely develops at blood lead levels below 80 µg/100g.

(IV) Renal.

a) Renal toxicity represents one of the most serious health effects of lead poisoning. In the early stages of disease nuclear inclusion bodies can frequently be identified in proximal renal tubular cells.

Renal functions remain normal and the changes in this stage are probably reversible. With more advanced disease there is progressive interstitial fibrosis and impaired renal function. Eventually extensive interstitial fibrosis ensues with sclerotic glomeruli and dilated and atrophied proximal tubules; all represent end stage kidney disease. Azotemia can be progressive, eventually resulting in frank uremia necessitating dialysis. There is occasionally associated hypertension and hyperuricemia with or without gout.

b) Early kidney disease is difficult to detect. The urinalysis is normal in early lead nephropathy and the blood urea nitrogen and serum creatinine increase only when two-thirds of kidney function is lost. Measurement of creatinine clearance can often detect earlier disease as can other methods of measurement of glomerular filtration rate. An abnormal Ca-EDTA mobilization test has been used to differentiate between lead-induced and other nephropathies, but this procedure is not widely accepted. A form of Fanconi syndrome with aminoaciduria, glycosuria, and hyperphosphaturia indicating severe injury to the proximal renal tubules is occasionally seen in children.

(V) Reproductive effects.

a) Exposure to lead can have serious effects on reproductive function in both males and females. In male workers exposed to lead there can be a decrease in sexual drive, impotence, decreased ability to produce healthy sperm, and sterility. Malformed sperm (teratospermia), decreased number of sperm (hypospermia), and sperm with decreased motility (asthenospermia) can occur. Teratospermia has been noted at mean blood lead levels of 53 µg/100g and hypospermia and asthenospermia at 41 µg/100g. Furthermore, there appears to be a dose-response relationship for teratospermia in lead exposed workers.

b) Women exposed to lead may experience menstrual disturbances including dysmenorrhea, menorrhagia and amenorrhea. Following exposure to lead, women have a higher frequency of sterility, premature births, spontaneous miscarriages, and stillbirths.

c) Germ cells can be affected by lead and cause genetic damage in the egg or sperm cells before conception and result in failure to implant, miscarriage, stillbirth, or birth defects.

d) Infants of mothers with lead poisoning have a higher mortality during the first year and suffer from lowered birth weights, slower growth, and nervous system disorders.

e) Lead can pass through the placental barrier and lead levels in the mother's blood are comparable to concentrations of lead in the umbilical cord at birth. Transplacental passage becomes detectable at 12-14 weeks of gestation and increases until birth.

f) There is little direct data on damage to the fetus from exposure to lead but it is generally assumed that the fetus and newborn would be at least as susceptible to neurological damage as young children. Blood lead levels of 50-60 µg/100g in children can cause significant neurobehavioral impairments, and there is evidence of hyperactivity at blood levels as low as 25 µg/100g. Given the overall body of literature concerning the adverse health effects of lead in children, WISHA feels that the blood lead level in children should be maintained below 30 µg/100g with a population mean of 15 µg/100g. Blood lead levels in the fetus and newborn likewise should not exceed 30 µg/100g.

g) Because of lead's ability to pass through the placental barrier and also because of the demonstrated adverse effects of lead on reproductive function in both males and females as well as the risk of genetic damage of lead on both the ovum and sperm, WISHA recommends a 30 µg/100g maximum permissible blood lead level in both males and females who wish to bear children.

(VI) Other toxic effects.

a) Debate and research continue on the effects of lead on the human body. Hypertension has frequently been noted in occupationally exposed individuals although it is difficult to assess whether this is due to lead's adverse effects on the kidneys or if some other mechanism is involved.

b) Vascular and electrocardiographic changes have been detected but have not been well characterized. Lead is thought to impair thyroid function and interfere with the pituitary-adrenal axis, but again these effects have not been well defined.

(iv) Medical evaluation.

(A) The most important principle in evaluating a worker for any occupational disease including lead poisoning is a high index of suspicion on the part of the examining physician. As discussed in Section (ii), lead can affect numerous organ systems and produce a wide array of signs and symptoms, most of which are nonspecific and subtle in nature at least in the early stages of disease. Unless serious concern for lead toxicity is present, many of the early clues to diagnosis may easily be overlooked.

(B) The crucial initial step in the medical evaluation is recognizing that a worker's employment can result in exposure to lead. The worker will frequently be able to define exposures to lead and lead-containing materials but often will not volunteer this information unless specifically asked. In other situations the worker may not know of any exposures to lead but the suspicion might be raised on the part of the physician because of the industry or occupation of the worker. Potential occupational exposure to lead and its compounds occur in at least 120 occupations, including lead smelting, the manufacture of lead storage batteries, the manufacture of lead pigments and products containing pigments, solder manufacture, shipbuilding and ship repair, auto manufacturing, construction, and painting.

(C) Once the possibility for lead exposure is raised, the focus can then be directed toward eliciting information from the medical history, physical exam, and finally from laboratory data to evaluate the worker for potential lead toxicity.

(D) A complete and detailed work history is important in the initial evaluation. A listing of all previous employment with information on work processes, exposure to fumes or dust, known exposures to lead or other toxic substances, respiratory protection used, and previous medical surveillance should all be included in the worker's record. Where exposure to lead is suspected, information concerning on-the-job personal hygiene, smoking or eating habits in work areas, laundry procedures, and use of any protective clothing or respiratory protection equipment should be noted. A complete work history is essential in the medical evaluation of a worker with suspected lead toxicity, especially when long-term effects such as neurotoxicity and nephrotoxicity are considered.

(E) The medical history is also of fundamental importance and should include a listing of all past and current medical conditions, current medications including proprietary drug intake, previous surgeries and hospitalizations, allergies, smoking history, alcohol consumption, and also nonoccupational lead exposures such as hobbies (hunting, riflery). Also known childhood exposures should be elicited. Any previous history of hematological, neurological, gastrointestinal, renal, psychological, gynecological, genetic, or reproductive problems should be specifically noted.

(F) A careful and complete review of systems must be performed to assess both recognized complaints and subtle or slowly acquired symptoms which the worker might not appreciate as being significant. The review of symptoms should include the following:

General	***Weight Loss, Fatigue, Decreased Appetite.***
Head, Eyes, Ears, Nose, Throat (HEENT)	Headaches, visual disturbance or decreased visual acuity, hearing deficits or tinnitus, pigmentation of the oral mucosa, or metallic taste in mouth.
Cardio-pulmonary	Shortness of breath, cough, chest pains, palpitations, or orthopnea.
Gastrointestinal	nausea, vomiting, heartburn, abdominal pain, constipation or diarrhea.
Neurologic	Irritability, insomnia, weakness (fatigue), dizziness, loss of memory, confusion, hallucinations, incoordination, ataxia, decreased strength in hands or feet, disturbance in gait, difficulty in climbing stairs, or seizures.
Hematologic	pallor, easy fatigability, abnormal blood loss, melena.
Reproductive (male or female and spouse where relevant)	history of infertility, impotence, loss of libidio, abnormal menstrual periods, history of miscarriages, stillbirths, or children with birth defects.
Musculo-skeletal	Muscle and joint pains.

(G) The physical examination should emphasize the neurological, gastrointestinal, and cardiovascular systems. The worker's weight and blood pressure should be recorded and the oral mucosa checked for pigmentation characteristic of a possible Burtonian or lead line on the gingiva. It should be noted, however, that the lead line may not be present even in severe lead poisoning if good oral hygiene is practiced.

(H) The presence of pallor on skin examination may indicate an anemia, which if severe might also be associated with a tachycardia. If an anemia is suspected, an active search for blood loss should be undertaken including potential blood loss through the gastrointestinal tract.

(I) A complete neurological examination should include an adequate mental status evaluation including a search for behavioral and psychological disturbances, memory testing, evaluation for irritability, insomnia, hallucinations, and mental clouding. Gait and coordination should be examined along with close observation for tremor. A detailed evaluation of peripheral nerve function including careful sensory and motor function testing is warranted. Strength testing particularly of extensor muscle groups of all extremities is of fundamental importance.

(J) Cranial nerve evaluation should also be included in the routine examination.

(K) The abdominal examination should include auscultation for bowel sounds and abnormal bruits and palpation for organomegaly, masses, and diffuse abdominal tenderness.

(L) Cardiovascular examination should evaluate possible early signs of congestive heart failure. Pulmonary status should be addressed particularly if respirator protection is contemplated.

(M) As part of the medical evaluation, the lead standard requires the following laboratory studies.

(I) Blood lead level.

(II) Hemoglobin and hematocrit determinations, red cell indices, and examination of the peripheral blood smear to evaluate red blood cell morphology.

(III) Blood urea nitrogen.

(IV) Serum creatinine.

(V) Routine urinalysis with microscopic examination.

(VI) A zinc protoporphyrin level.

(N) In addition to the above, the physician is authorized to order any further laboratory or other tests which they deem necessary in accordance with sound medical practice. The evaluation must also include pregnancy testing or laboratory evaluation of male fertility if requested by the employee.

(O) Additional tests which are probably not warranted on a routine basis but may be appropriate when blood lead and ZPP levels are equivocal include delta aminolevulinic acid and coproporphyrin concentrations in the urine, and dark-field illumination for detection of basophilic stippling in red blood cells.

(P) If an anemia is detected further studies including a careful examination of the peripheral smear, reticulocyte count, stool for occult blood, serum iron, total iron binding capacity, bilirubin, and, if appropriate vitamin B12 and folate may be of value in attempting to identify the cause of the anemia.

(Q) If a peripheral neuropathy is suspected, nerve conduction studies are warranted both for diagnosis and as a basis to monitor any therapy.

(R) If renal disease is questioned, a 24-hour urine collection for creatinine clearance, protein, and electrolytes may be indicated. Elevated uric acid levels may result from lead-induced renal disease and a serum uric acid level might be performed.

(S) An electrocardiogram and chest x-ray may be obtained as deemed appropriate.

(T) Sophisticated and highly specialized testing should not be done routinely and where indicated should be under the direction of a specialist.

(v) Laboratory evaluation.

(A) The blood level at present remains the single most important test to monitor lead exposure and is the test used in the medical surveillance program under the lead standard to guide employee medical removal. The ZPP has several advantages over the blood lead level. Because of its relatively recent development and the lack of extensive data concerning its interpretation, the ZPP currently remains an ancillary test.

(B) This section will discuss the blood lead level and ZPP in detail and will outline their relative advantages and disadvantages. Other blood tests currently available to evaluate lead exposure will also be reviewed.

(C) The blood lead level is a good index of current or recent lead absorption when there is no anemia present and when the worker has not taken any chelating agents. However, blood lead levels along with urinary lead levels do not necessarily indicate the total body burden of lead and are not adequate measures of past exposure. One reason for this is that lead has a high affinity for bone and up to 90 percent of the body's total lead is deposited there. A very important component of the total lead body burden is lead in soft tissue (liver, kidneys, and brain). This fraction of the lead body burden, the biologically active lead, is not entirely reflected by blood lead levels since it is a function of the dynamics of lead absorption, distribution, deposition in bone and excretion. Following discontinuation of exposure to lead, the excess body burden is only slowly mobilized from bone and other relatively stable stores and excreted. Consequently, a high blood lead level may only represent recent heavy exposure to lead without a significant total body excess and likewise a low blood lead level does not exclude an elevated total body burden of lead.

(D) Also due to its correlation with recent exposures, the blood lead level may vary considerably over short time intervals.

(E) To minimize laboratory error and erroneous results due to contamination, blood specimens must be carefully collected after thorough cleaning of the skin with appropriate methods using lead-free containers and analyzed by a reliable laboratory. Under the standard, samples must be analyzed in laboratories which are approved by the Center for Disease Control (CDC) or which have received satisfactory grades in proficiency testing by the CDC in the previous year. Analysis is to be made using atomic absorption spectrophotometry anodic stripping; voltammetry or any method which meets the accuracy requirements set forth by the standard.

(F) The determination of lead in urine is generally considered a less reliable monitoring technique than analysis of whole blood primarily due to individual variability in urinary excretion capacity as well as the technical difficulty of obtaining accurate 24 hour urine collections. In addition, workers with renal insufficiency, whether due to lead or some other cause, may have decreased lead clearance and consequently urine lead levels may underestimate the true lead burden. Therefore, urine lead levels should not be used as a routine test.

(G) The zinc protoporphyrin test, unlike the blood lead determination, measures an adverse metabolic effect of lead and as such is a better indicator of lead toxicity than the level of blood lead itself. The level of ZPP reflects lead absorption over the preceding three to four months, and therefore is a better indicator of lead body burden. The ZPP requires more time than the blood lead to read significantly elevated levels; the return to normal after discontinuing lead exposure is also slower. Furthermore, the ZPP test is simpler, faster, and less expensive to perform and no contamination is possible. Many investigators believe it is the most reliable means of monitoring chronic lead absorption.

(H) Zinc protoporphyrin results from the inhibition of the enzyme ferrochelatase which catalyzes the insertion of an iron molecule into the protoporphyrin molecule, which then becomes heme. If iron is not inserted into the molecule then zinc, having a greater affinity for protoporphyrin, takes place in the iron, forming ZPP.

(I) An elevation in the level of circulating ZPP may occur at blood lead levels as low as 20-30 µg/100g in some workers. Once the blood lead level has reached 40 µg/100g there is more marked rise in the ZPP value from its normal range of less than 100 µg/100ml. Increases in blood lead levels beyond 40 µg/100g are associated with exponential increases in ZPP.

(J) Whereas blood lead levels fluctuate over short time spans, ZPP levels remain relatively stable. ZPP is measured directly in red blood cells and is present for the cell's entire 120 day lifespan. Therefore, the ZPP level in blood reflects the average ZPP production over the previous three to four months and consequently the average lead exposure during that time interval.

(K) It is recommended that a hematocrit be determined whenever a confirmed ZPP of 50 µg/100ml whole blood is obtained to rule out a significant underlying anemia. If the ZPP is in excess of 100µg/100ml and not associated with abnormal elevations in blood lead levels, the laboratory should be checked to be sure the blood leads were determined using atomic absorption spectrophotometry, anodic stripping voltammetry or any method which meets the accuracy requirements set forth by the standard, by a CDC approved laboratory which is experienced in lead level determinations. Repeat periodic blood lead studies should be obtained in all individuals with elevated ZPP levels to be certain that an associated elevated blood lead level has not been missed due to transient fluctuations in blood leads.

(L) ZPP has characteristic fluorescence spectrum with a peak at 594nm which is detectable with a hematofluorimeter. The hematofluorimeter is accurate and portable and can provide on-site, instantaneous results for workers who can be frequently tested via a finger prick.

(M) However, careful attention must be given to calibration and quality control procedures. Limited data on blood lead - ZPP correlations and the ZPP levels which are associated with the adverse health effects discussed in item (ii) are the major limitations of the test. Also it is difficult to correlate ZPP levels with environmental exposure and there is some variation of response with age and sex. Nevertheless, the ZPP promises to be an important diagnostic test for the early detection of lead toxicity and its value will increase as more data is collected regarding its relationship to other manifestations of lead poisoning.

(N) Levels of delta-aminolevulinic acid (ALA) in the urine are also used as a measure of lead exposure. Increasing concentrations of ALA are believed to result from the inhibition of the enzyme delta-aminolevulinic acid dehydrase (ALA-D). Although the test is relatively easy to perform, inexpensive, and rapid, the disadvantages include variability in results, the necessity to collect a complete 24 hour urine sample which has a specific gravity greater than 1.010, and also the fact that ALA decomposes in the presence of light.

(O) The pattern of porphyrin excretion in the urine can also be helpful in identifying lead intoxication. With lead poisoning, the urine concentrations of coproporphyrins I and II, porphobilinogen and uroporphyrin I rise. The most important increase, however, is that of coproporphyrin III; levels may exceed 5,000 µg/1 in the urine in lead poisoned individuals, but its correlation with blood lead levels and ZPP are not as good as those of ALA. Increases in urinary porphyrins are not diagnostic of lead toxicity and may be seen in porphyria, some liver diseases, and in patients with high reticulocyte counts.

(vi) Summary.

(A) The WISHA standard for inorganic lead places significant emphasis on the medical surveillance of all workers exposed to levels of inorganic lead above the action level of 30 $\mu g/m^3$ TWA. The physician has a fundamental role in this surveillance program, and in the operation of the medical removal protection program.

(B) Even with adequate worker education on the adverse health effects of lead and appropriate training in work practices, personal hygiene and other control measures, the physician has a primary responsibility for evaluating potential lead toxicity in the worker. It is only through a careful and detailed medical and work history, a complete physical examination and appropriate laboratory testing that an accurate assessment can be made. Many of the adverse health effects of lead toxicity are either irreversible or only partially reversible and therefore early detection of disease is very important.

(C) This document outlines the medical monitoring program as defined by the occupational safety and health standard for inorganic lead. It reviews the adverse health effects of lead poisoning and describes the important elements of the history and physical examinations as they relate to these adverse effects.

(D) It is hoped that this review and discussion will give the physician a better understanding of the WISHA standard with the ultimate goal of protecting the health and well-being of the worker exposed to lead under their care.

(d) Appendix D. Recommendations to employers concerning high-risk tasks (nonmandatory).

The department advises employers that the following tasks have a high risk for lead overexposure (this list is not complete; other tasks also can result in lead over-exposure):

- Any open flame operation involving lead-containing solder in a manner producing molten solder, including the manufacture or repair of motor vehicle radiators;
- Sanding, cutting or grinding of lead-containing solder;
- Breaking, recycling or manufacture of lead-containing batteries;
- Casting objects using lead, brass, or lead-containing alloys;
- Where lead-containing coatings or paints are present:
  - Abrasive blasting
  - Welding
  - Cutting
  - Torch burning
  - Manual demolition of structures
  - Manual scraping
  - Manual sanding
  - Heat gun applications
  - Power tool cleaning
  - Rivet busting
  - Clean-up activities where dry expendable abrasives are used
  - Abrasive blasting enclosure movement and removal;
  - Spray-painting with lead-containing paint;
  - Using lead-containing mortar;
  - Lead burning;
  - Operation or cleaning of shooting facilities where lead bullets are used;
  - Formulation or processing of lead-containing pigments or paints;
  - Cutting, burning, or melting of lead-containing materials.

The department recommends that annual blood lead testing be offered to all employees potentially overexposed to lead, including those performing the tasks listed above, regardless of air lead levels. Research has shown that air lead levels often do not accurately predict workers' lead overexposure. The blood lead testing will provide the most information if performed during a period of peak lead exposure.

Employers should be aware that the United States Public Health Service has set a goal of eliminating occupational exposures which result in whole blood lead levels of 25 µg/dl or greater. This goal should guide whether employees' blood lead levels indicate lead overexposure.

If blood lead levels are elevated in an employee performing a task associated with lead overexposure, employers should assess the maintenance and effectiveness of exposure controls, hygiene facilities, respiratory protection program, the employee's work practices and personal hygiene, and the employee's respirator use, if any. If a deficiency exists in any of these areas, the employer should correct the problem.

WAC 296-62-07531 Appendix D sampling and analytical methods for benzene monitoring and measurement procedures.

Measurements taken for the purpose of determining employee exposure to benzene are best taken so that the representative average eight-hour exposure may be determined from a single eight-hour sample or two four-hour samples. Short-time interval samples (or grab samples) may also be used to determine average exposure level if a minimum of five measurements are taken in a random manner over the eight-hour work shift. Random sampling means that any portion of the work shift has the same chance of being sampled as any other. The arithmetic average of all such random samples taken on one work shift is an estimate of an employee's average level of exposure for that work shift. Air samples should be taken in the employee's breathing zone (air that would most nearly represent that inhaled by the employee). Sampling and analysis must be performed with procedures meeting the requirements of the standard.

There are a number of methods available for monitoring employee exposures to benzene. The sampling and analysis may be performed by collection of the benzene vapor on charcoal adsorption tubes, with subsequent chemical analysis by gas chromatography. Sampling and analysis may also be performed by portable direct reading instruments, real-time continuous monitoring systems, passive dosimeters or other suitable methods. The employer has the obligation of selecting a monitoring method which meets the accuracy and precision requirements of the standard under his unique field conditions. The standard requires that the method of monitoring must have an accuracy, to a ninety-five percent confidence level, of not less than plus or minus twenty-five percent for concentrations of benzene greater than or equal to 0.5 ppm.

The WISHA laboratory uses NIOSH Method 1500 for evaluation of benzene air concentrations.

(1) **WISHA method HYDCB for air samples**.

Analyte: Benzene.

Matrix: Air.

Procedure: Adsorption on charcoal, desorption with carbon disulfide, analysis by GC.

Detection limit: 0.04 ppm.

Recommended air volume and sampling rate: 10L at 0.05 to 0.2 L/min.

(a) Principle of the method.

(i) A known volume of air is drawn through a charcoal tube to trap the organic vapors present.

(ii) The charcoal in the tube is transferred to a small, stoppered vial, and the analyte is desorbed with carbon disulfide.

(iii) An aliquot of the desorbed sample is injected into a gas chromatograph.

(iv) The area of the resulting peak is determined and compared with areas obtained from standards.

(b) Advantages and disadvantages of the method.

(i) The sampling device is small, portable, and involves no liquids. Interferences are minimal, and most of those which do occur can be eliminated by altering chromatographic conditions. The samples are analyzed by means of a quick, instrumental method.

(ii) The amount of sample which can be taken is limited by the number of milligrams that the tube will hold before overloading. When the sample value obtained for the backup section of the charcoal tube exceeds twenty-five percent of that found on the front section, the possibility of sample loss exists.

(c) Apparatus.

(i) A calibrated personal sampling pump whose flow can be determined within ±5 percent at the recommended flow rate.

(ii) Charcoal tubes: Glass with both ends flame sealed, 7 cm long with a 6-mm O.D. and a 4-mm I.D., containing two sections of 20/40 mesh activated charcoal separated by a 2-mm portion of urethane foam. The activated charcoal is prepared from coconut shells and is obtained commercially. The adsorbing section contains 100 mg of charcoal, the back-up section 50 mg. A 3-mm portion of urethane foam is placed between the outlet end of the tube and the back-up section. A plug of silanized glass wool is placed in front of the adsorbing section. The pressure drop across the tube must be less than one inch of mercury at a flow rate of one liter per minute.

(iii) Gas chromatograph equipped with a flame ionization detector.

(iv) Column (10-ft 1/8-in stainless steel) packed with 80/100 Supelcoport coated with twenty percent SP 2100, 0.1 percent CW 1500.

(v) An electronic integrator or some other suitable method for measuring peak area.

(v) Two-milliliter sample vials with Teflon-lined caps.

(vi) Microliter syringes: 10-microliter 10-uL syringe, and other convenient sizes for making standards, 1-uL syringe for sample injections.

(vii) Pipets: 1.0 mL delivery pipets.

(viii) Volumetric flasks: Convenient sizes for making standard solutions.

(d) Reagents.

(i) Chromatographic quality carbon disulfide (CS2). Most commercially available carbon disulfide contains a trace of benzene which must be removed. It can be removed with the following procedure:

Heat under reflux for two to three hours, 500 mL of carbon disulfide, 10 mL concentrated sulfuric acid, and five drops of concentrated nitric acid. The benzene is converted to nitrobenzene. The carbon disulfide layer is removed, dried with anhydrous sodium sulfate, and distilled. The recovered carbon disulfide should be benzene free. (It has recently been determined that benzene can also be removed by passing the carbon disulfide through 13x molecular sieve.)

(ii) Benzene, reagent grade.

(iii) p-Cymene, reagent grade, (internal standard).

(iv) Desorbing reagent. The desorbing reagent is prepared by adding 0.05 mL of p-Cymene per milliliter of carbon disulfide. (The internal standard offers a convenient means correcting analytical response for slight inconsistencies in the size of sample injections. If the external standard technique is preferred, the internal standard can be eliminated.)

(v) Purified GC grade helium, hydrogen, and air.

(e) Procedure.

(i) Cleaning of equipment. All glassware used for the laboratory analysis should be properly cleaned and free of organics which could interfere in the analysis.

(ii) Calibration of personal pumps. Each pump must be calibrated with a representative charcoal tube in the line.

(iii) Collection and shipping of samples.

(A) Immediately before sampling, break the ends of the tube to provide an opening at least one-half the internal diameter of the tube (2 mm).

(B) The smaller section of the charcoal is used as the backup and should be placed nearest the sampling pump.

(C) The charcoal tube should be placed in a vertical position during sampling to minimize channeling through the charcoal.

(D) Air being sampled should not be passed through any hose or tubing before entering the charcoal tube.

(E) A sample size of ten liters is recommended. Sample at a flow rate of approximately 0.05 to 0.2 liters per minute. The flow rate should be known with an accuracy of at least ±5 percent.

(F) The charcoal tubes should be capped with the supplied plastic caps immediately after sampling.

(G) Submit at least one blank tube (a charcoal tube subjected to the same handling procedures, without having any air drawn through it) with each set of samples. Take necessary shipping and packing precautions to minimize breakage of samples.

(iv) Analysis of samples.

(A) Preparation of samples. In preparation for analysis, each charcoal tube is scored with a file in front of the first section of charcoal and broken open. The glass wool is removed and discarded. The charcoal in the first (larger) section is transferred to a 2-ml vial. The separating section of foam is removed and discarded; the second section is transferred to another capped vial. These two sections are analyzed separately.

(B) Desorption of samples. Prior to analysis, 1.0 mL of desorbing solution is pipetted into each sample container. The desorbing solution consists of 0.05 µL internal standard per mL of carbon disulfide. The sample vials are capped as soon as the solvent is added. Desorption should be done for thirty minutes with occasional shaking.

(C) GC conditions. Typical operating conditions for the gas chromatograph are:

(I) 30 mL/min (60 psig) helium carrier gas flow.

(II) 30 mL/min (40 psig) hydrogen gas flow to detector.

(III) 240 mL/min (40 psig) air flow to detector.

(IV) 150°C injector temperature.

(V) 250°C detector temperature.

(VI) 100°C column temperature.

(D) Injection size. 1 µL.

(E) Measurement of area. The peak areas are measured by an electronic integrator or some other suitable form of area measurement.

(F) An internal standard procedure is used. The integrator is calibrated to report results in ppm for a ten liter air sample after correction for desorption efficiency.

(v) Determination of desorption efficiency.

(A) Importance of determination. The desorption efficiency of a particular compound can vary from one laboratory to another and from one lot of chemical to another. Thus, it is necessary to determine, at least once, the percentage of the specific compound that is removed in the desorption process, provided the same batch of charcoal is used.

(B) Procedure for determining desorption efficiency. The reference portion of the charcoal tube is removed. To the remaining portion, amounts representing 0.5X, 1X, and 2X and (X represents target concentration) based on a 10 L air sample are injected into several tubes at each level. Dilutions of benzene with carbon disulfide are made to allow injection of measurable quantities. These tubes are then allowed to equilibrate at least overnight. Following equilibration they are analyzed following the same procedure as the samples. Desorption efficiency is determined by dividing the amount of benzene found by amount spiked on the tube.

(f) Calibration and standards. A series of standards varying in concentration over the range of interest is prepared and analyzed under the same GC conditions that will be used on the samples. A calibration curve is prepared by plotting concentration (mg/mL) versus peak area.

(g) Calculations. Benzene air concentration can be calculated from the following equation:

$mg/m^3 = (A)(B)/(C)(D)$

Where: A = µg/mL benzene, obtained from the calibration curve

B = desorption volume (1 mL)

C = Liters of air sampled

D = desorption efficiency

The concentration in mg/m^3 can be converted to ppm (at 25° C and 760 mm) with the following equation:

$ppm = (mg/m^3)(24.46)/(78.11)$

Where: 24.46 = molar volume of an ideal gas 25° C and 760 mm

78.11 = molecular weight of benzene

(h) Backup data.

(i) Detection limit-air samples.

The detection limit for the analytical procedure is 1.28 mg with a coefficient of 0.04 ppm for a 10 L air sample. This amount provided a chromatographic peak that could be identifiable in the presence of possible interferences. The detection limit data were obtained by making 1 µL injections of a 1.283 µg/mL standard.

Table 1		
Injection	**Area Count**	
1	655.4	
2	617.5	
3	662.0	$\bar{X}$ = 640.2
4	641.1	SD = 14.9
5	636.4	CV = 0.023
6	629.2	

(ii) Pooled coefficient of variation-Air Samples. The pooled coefficient of variation for the analytical procedure was determined by 1 µL replicate injections of analytical standards. The standards were 16.04, 32.08, and 64.16 µg/mL, which are equivalent to 0.5, 1.0, and 2.0 ppm for a 10 L air sample respectively.

Table 2			
	Area Count		
Injection	**0.5 ppm**	**1.0 ppm**	**2.0 ppm**
1	3996.5	8130.2	16481
2	4059.4	8235.6	16493
3	4052.0	8307.9	16535
4	4027.2	8263.2	16609
5	4046.3	8291.1	16552
6	4137.9	8288.8	16618
$\bar{X}$ =	4053.3	8254.0	16548.3
SD =	47.2	62.5	57.1
CV =	0.0116	0.0076	0.0034
CV =			

(iii) Storage data-air samples.

Samples were generated at 1.03 ppm benzene at eighty percent relative humidity, 22° C, and 643 mm. All samples were taken for fifty minutes at 0.2 L/min. Six samples were analyzed immediately and the rest of the samples were divided into two groups by fifteen samples each. One group was stored at refrigerated temperature of –25° C, and the other group was stored at ambient temperature (approximately 23° C). These samples were analyzed over a period of fifteen days. The results are tabulated below.

Table 3						
Day analyzed	Refrigerated			Ambient		
0	97.4	98.7	98.9	97.4	98.7	98.9
0	97.1	100.5	100.9*	97.1	100.6	100.9
2	95.8	96.4	95.4	95.4	96.6	96.9
5	93.9	93.7	92.4	92.4	94.3	94.1
9	93.6	95.5	94.6	95.2	95.6	96.6
13	94.3	95.3	93.7	91.0	95.0	94.6
15	96.6	95.8	94.2	92.9	96.3	95.9

(iv) Desorption data.

Samples were prepared by injecting liquid benzene onto the A section of charcoal tubes. Samples were prepared that would be equivalent to 0.5, 1.0, and 2.0 ppm for a 10 L air sample.

Table 4			
Sample	0.5 ppm	1.0 ppm	2.0 ppm
1	99.4	98.8	99.5
2	99.5	98.7	99.7
3	99.2	98.6	99.2
4	99.4	99.1	100.0
5	99.2	99.0	99.7
6	99.8	99.1	99.9
$\bar{X}$ =	99.4	98.9	99.8
SD =	.22	0.21	0.18
CV =	0.0022	0.0021	0.0018
$\bar{X}$ = 99.4			

(v) Carbon disulfide.

Carbon disulfide from a number of sources was analyzed for benzene contamination. The results are given in the following table. The benzene contaminant can be removed with the procedures given in (d)(i) of this subsection.

Table 5		
Sample	µG Benzene/mL	ppm equivalent (for 10 l air sample
Aldrich Lot 83017	4.20	0.13
Baker Lot 720364	1.0†	0.03
Baker Lot 822351	1.0†	0.03
Malinkrodt Lot WEMP	1.74	0.05
Malinkrodt Lot WHGA	5.65	0.18
Treated CS^2	2.90	0.09

(2) **WISHA laboratory method for bulk samples**.

Analyte: Benzene.

Matrix: Bulk samples.

Procedure: Bulk samples are analyzed directly by high performance liquid chromatography (HPLC) or by capillary gas chromatography. See laboratory manual for GC procedure.

Detection limits: 0.01% by volume.

(a) Principle of the method.

(i) An aliquot of the bulk sample to be analyzed is injected into a liquid chromatograph or gas chromatograph.

(ii) The peak area for benzene is determined and compared to areas obtained from standards.

(b) Advantages and disadvantages of the method.

(i) The analytical procedure is quick, sensitive, and reproducible.

(ii) Reanalysis of samples is possible.

(iii) Interferences can be circumvented by proper selection of HPLC parameters or GC parameters.

(iv) Samples must be free of any particulates that may clog the capillary tubing in the liquid chromatograph. This may require distilling the sample or clarifying with a clarification kit.

(c) Apparatus.

(i) Liquid chromatograph equipped with a UV detector or capillary gas chromatograph with FID detector.

(ii) HPLC column that will separate benzene from other components in the bulk sample being analyzed. The column used for validation studies was a Waters uBondapack C18, 30 cm x 3.9 mm.

(iii) A clarification kit to remove any particulates in the bulk if necessary.

(iv) A micro-distillation apparatus to distill any samples if necessary.

(v) An electronic integrator or some other suitable method of measuring peak areas.

(vi) Microliter syringes-10 µL syringe and other convenient sizes for making standards. 10 µL syringe for sample injections.

(vii) Volumetric flasks, 5 mL and other convenient sizes for preparing standards and making dilutions.

(d) Reagents.

(i) Benzene, reagent grade.

(ii) HPLC grade water, methyl alcohol, and isopropyl alcohol.

(e) Collection and shipment of samples.

(i) Samples should be transported in glass containers with Teflon-lined caps.

(ii) Samples should not be put in the same container used for air samples.

(f) Analysis of samples.

(i) Sample preparation.

If necessary, the samples are distilled or clarified. Samples are analyzed undiluted. If the benzene concentration is out of the working range, suitable dilutions are made with isopropyl alcohol.

(ii) HPLC conditions.

The typical operating conditions for the high performance liquid chromatograph are:

(A) Mobile phase-Methyl alcohol/water, 50/50.

(B) Analytical wavelength-254 nm.

(C) Injection size-10 µL.

(iii) Measurement of peak area and calibration.

Peak areas are measured by an integrator or other suitable means. The integrator is calibrated to report results % in benzene by volume.

(g) Calculations.

Since the integrator is programmed to report results in % benzene by volume in an undiluted sample, the following equation is used:

% Benzene by Volume = A x B

Where: A = % by volume on report

B = Dilution Factor

(B = 1 for undiluted sample)

(h) Backup data.

(i) Detection limit-bulk samples.

The detection limit for the analytical procedure for bulk samples is 0.88 µg, with a coefficient or variation of 0.019 at this level. This amount provided a chromatographic peak that could be identifiable in the presence of possible interferences. The detection limit data were obtained by making 10 µL injections of a 0.10% by volume standard.

Table 6		
1	45386	
2	44214	
3	43822	$\bar{X}$ = 44040.1
4	44062	SD = 852.5
6	42724	CV = 0.019

(vii) Pooled coefficient of variation-bulk samples.

The pooled coefficient of variation for analytical procedure was determined by 50 µL replicate injections of analytical standards. The standards were 0.01, 0.02, 0.04, 0.10, 1.0, and 2.0% benzene by volume.

Table 7						
Injection No.	**0.01**	**0.02**	**0.04**	**0.10**	**1.0**	**2.0**
1	45386	84737	166097	448497	4395380	9339150
2	44241	84300	170832	441299	4590800	9484900
3	43833	83835	164160	443719	4593200	9557580
4	44062	84381	164445	444842	4642350	9677060
5	44006	83012	168398	442564	4646430	9766240
6	42724	81957	173002	443975	4646260	------
$\bar{X}$	44040.1	83703.6	167872	444149	4585767	9564986
SD =	852.5	1042.2	3589.8	2459.1	96839.3	166233
CV =	0.0194	0.0125	0.0213	0.0055	0.0211	0.0174
CV =	0.017					

WAC 296-62-07540 Formaldehyde.

Note: The requirements in this chapter apply only to agriculture. The general industry requirements relating to formaldehyde have been moved to chapter 296-856 WAC, Formaldehyde.

(1) **Scope and application**. This standard applies to all occupational exposures to formaldehyde, i.e., from formaldehyde gas, its solutions, and materials that release formaldehyde.

(2) **Definitions**. For purposes of this standard, the following definitions shall apply:

(a) **Action level**. A concentration of 0.5 part formaldehyde per million parts of air (0.5 ppm) calculated as an 8-hour time-weighted average (TWA) concentration.

(b) **Approved**. Approved by the director of the department of labor and industries or their authorized representative: Provided, however, That should a provision of this chapter state that approval by an agency or organization other than the department of labor and industries is required, such as Underwriters' Laboratories or the Mine Safety and Health Administration and the National Institute for Occupational Safety and Health, the provision of WAC 296-800-370 shall apply.

(c) **Authorized person**. Any person required by work duties to be present in regulated work areas, or authorized to do so by the employer, by this section of the standard, or by the WISHA Act.

(d) **Director**. The director of the department of labor and industries, or their designated representative.

(e) **Emergency**. Any occurrence, such as but not limited to equipment failure, rupture of containers, or failure of control equipment that results in an uncontrolled release of a significant amount of formaldehyde.

(f) **Employee exposure**. The exposure to airborne formaldehyde which would occur without corrections for protection provided by any respirator that is in use.

(g) **Formaldehyde**. The chemical substance, HCHO, Chemical Abstracts Service Registry No. 50-00-0.

(3) **Permissible exposure limit (PEL)**.

(a) TWA: The employer must ensure that no employee is exposed to an airborne concentration of formaldehyde which exceeds 0.75 part formaldehyde per million parts of air as an 8-hour TWA.

(b) Short term exposure limit (STEL): The employer shall must ensure that no employee is exposed to an airborne concentration of formaldehyde which exceeds two parts formaldehyde per million parts of air (2 ppm) as a fifteen-minute STEL.

(4) **Exposure monitoring**.

(a) General.

(i) Each employer who has a workplace covered by this standard must monitor employees to determine their exposure to formaldehyde.

(ii) Exception. Where the employer documents, using objective data, hat the presence of formaldehyde or formaldehyde-releasing products in the workplace cannot result in airborne concentrations of formaldehyde that would cause any employee to be exposed at or above the action level or the STEL under foreseeable conditions of use, the employer will not be required to measure employee exposure to formaldehyde.

(iii) When an employee's exposure is determined from representative sampling, the measurements used must be representative of the employee's full shift or short-term exposure to formaldehyde, as appropriate.

(iv) Representative samples for each job classification in each work area must be taken for each shift unless the employer can document with objective data that exposure levels for a given job classification are equivalent for different workshifts.

(b) Initial monitoring. The employer must identify all employees who may be exposed at or above the action level or at or above the STEL and accurately determine the exposure of each employee so identified.

(i) Unless the employer chooses to measure the exposure of each employee potentially exposed to formaldehyde, the employer must develop a representative sampling strategy and measure sufficient exposures within each job classification for each workshift to correctly characterize and not underestimate the exposure of any employee within each exposure group.

(ii) The initial monitoring process must be repeated each time there is a change in production, equipment, process, personnel, or control measures which may result in new or additional exposure to formaldehyde.

(iii) If the employer receives reports or signs or symptoms of respiratory or dermal conditions associated with formaldehyde exposure, the employer must promptly monitor the affected employee's exposure.

(c) Periodic monitoring.

(i) The employer must periodically measure and accurately determine exposure to formaldehyde for employees shown by the initial monitoring to be exposed at or above the action level or at or above the STEL.

(ii) If the last monitoring results reveal employee exposure at or above the action level, the employer must repeat monitoring of the employees at least every six months.

(iii) If the last monitoring results reveal employee exposure at or above the STEL, the employer must repeat monitoring of the employees at least once a year under worst conditions.

(d) Termination of monitoring. The employer may discontinue periodic monitoring for employees if results from two consecutive sampling periods taken at least seven days apart show that employee exposure is below the action level and the STEL. The results must be statistically representative and consistent with the employer's knowledge of the job and work operation.

(e) Accuracy of monitoring. Monitoring must be accurate, at the ninety-five percent confidence level, to within plus or minus twenty-five percent for airborne concentrations of formaldehyde at the TWA and the STEL and to within plus or minus thirty-five percent for airborne concentrations of formaldehyde at the action level.

(f) Employee notification of monitoring results. Within fifteen days of receiving the results of exposure monitoring conducted under this standard, the employer must notify the affected employees of these results. Notification must be in writing, either by distributing copies of the results to the employees or by posting the results. If the employee exposure is over either PEL, the employer must develop and implement a written plan to reduce employee exposure to or below both PELs, and give written notice to employees. The written notice must contain a description of the corrective action being taken by the employer to decrease exposure.

(g) Observation of monitoring.

(i) The employer must provide affected employees or their designated representatives an opportunity to observe any monitoring of employee exposure to formaldehyde required by this standard.

(ii) When observation of the monitoring of employee exposure to formaldehyde requires entry into an area where the use of protective clothing or equipment is required, the employer must provide the clothing and equipment to the observer, require the observer to use such clothing and equipment, and ensure that the observer complies with all other applicable safety and health procedures.

(5) **Regulated areas**.

(a) The employer must establish regulated areas where the concentration of airborne formaldehyde exceeds either the TWA or the STEL and post all entrances and accessways with signs bearing the following information:

DANGER
FORMALDEHYDE
IRRITANT AND POTENTIAL CANCER HAZARD
AUTHORIZED PERSONNEL ONLY

(b) The employer must limit access to regulated areas to authorized persons who have been trained to recognize the hazards of formaldehyde.

(c) An employer at a multi-employer worksite who establishes a regulated area must communicate the access restrictions and locations of these areas to other employers with work operations at that worksite.

(6) **Methods of compliance**.

(a) Engineering controls and work practices. The employer must institute engineering and work practice controls to reduce and maintain employee exposures to formaldehyde at or below the TWA and the STEL.

(b) Exception. Whenever the employer has established that feasible engineering and work practice controls cannot reduce employee exposure to or below either of the PELs, the employer must apply these controls to reduce employee exposures to the extent feasible and must supplement them with respirators which satisfy this standard.

(7) **Respiratory protection**.

(a) General. For employees who use respirators required by this section, the employer must provide respirators that comply with the requirements of this subsection. Respirators must be used during:

(i) Periods necessary to install or implement feasible engineering and work-practice controls;

(ii) Work operations, such as maintenance and repair activities or vessel cleaning, for which the employer establishes that engineering and work-practice controls are not feasible;

(iii) Work operations for which feasible engineering and work-practice controls are not yet sufficient to reduce exposure to or below the PELs;

(iv) Emergencies.

(b) Respirator program.

(i) The employer must implement a respiratory protection program as required by chapter 296-842 WAC, except WAC 296-842-13005 and 296-842-14005.

(ii) If air-purifying chemical-cartridge respirators are used, the employer must:

(A) Replace the cartridge after three hours of use or at the end of the workshift, whichever occurs first, unless the cartridge contains a NIOSH-certified end-of-service-life indicator (ESLI) to shown when breakthrough occurs.

(B) Unless the canister contains a NIOSH-certified ESLI to show when breakthrough occurs, replace canisters used in atmospheres up to 7.5 ppm (10 x PEL) every four hours and industrial-sized canisters used in atmospheres up to 75 ppm (100 x PEL) every two hours, or at the end of the workshift, whichever occurs first.

(c) Respirator selection.

(i) The employer must select appropriate respirators from Table 1 of this section.

Table 1 Minimum Requirements for Respiratory Protection Against Formaldehyde	
Condition of use of formaldehyde concentration (ppm)	**Minimum respirator required[1]**
Up to 7.5 ppm (10 x PEL)	Full facepiece with cartridges or canisters specifically approved for protection against formaldehyde[2].
Up to 75 ppm (100 x PEL)	Full-face mask with chin style or chest or back mounted type industrial size canister specifically approved for protection against formaldehyde. Type C supplied-air respirator pressure demand or continuous flow type, with full facepiece, hood, or helmet.
Above 75 ppm or unknown (emergencies) (100 x PEL)	Self-contained breathing apparatus (SCBA) with positive-pressure full facepiece. Combination supplied-air, full facepiece positive-pressure respirator with auxiliary self-contained air supply.
Fire fighting	SCBA with positive-pressure in full facepiece.
Escape	SCBA in demand or pressure demand mode. Full-face mask with chin style or front or back mounted type industrial size canister specifically approved for protection against formaldehyde.

[1]Respirators specified for use at higher concentrations may be used at lower concentrations.

[2] A half-mask respirator with cartridges specifically approved for protection against formaldehyde can be substituted for the full facepiece respirator providing that effective gas-proof goggles are provided and used in combination with the half-mask respirator.

(ii) The employer must provide a powered air-purifying respirator adequate to protect against formaldehyde exposure to any employee who has difficulty using a negative-pressure respirator.

(8) **Protective equipment and clothing**. Employers must comply with the provisions of WAC 296-800-160. When protective equipment or clothing is provided under these provisions, the employer must provide these protective devices at no cost to the employee and assure that the employee wears them.

(a) Selection. The employer must select protective clothing and equipment based upon the form of formaldehyde to be encountered, the conditions of use, and the hazard to be prevented.

(i) All contact of the eyes and skin with liquids containing one percent or more formaldehyde must be prevented by the use of chemical protective clothing made of material impervious to formaldehyde and the use of other personal protective equipment, such as goggles and face shields, as appropriate to the operation.

(ii) Contact with irritating or sensitizing materials must be prevented to the extent necessary to eliminate the hazard.

(iii) Where a face shield is worn, chemical safety goggles are also required if there is a danger of formaldehyde reaching the area of the eye.

(iv) Full body protection must be worn for entry into areas where concentrations exceed 100 ppm and for emergency reentry into areas of unknown concentration.

(b) Maintenance of protective equipment and clothing.

(i) The employer must ensure that protective equipment and clothing that has become contaminated with formaldehyde is cleaned or laundered before its reuse.

(ii) When ventilating formaldehyde-contaminated clothing and equipment, the employer must establish a storage area so that employee exposure is minimized. Containers for contaminated clothing and equipment and storage areas must have labels and signs containing the following information:

DANGER
FORMALDEHYDE-CONTAMINATED (CLOTHING) EQUIPMENT
AVOID INHALATION AND SKIN CONTACT

(iii) The employer must ensure that only persons trained to recognize the hazards of formaldehyde remove the contaminated material from the storage area for purposes of cleaning, laundering, or disposal.

(iv) The employer must ensure that no employee takes home equipment or clothing that is contaminated with formaldehyde.

(v) The employer must repair or replace all required protective clothing and equipment for each affected employee as necessary to ensure its effectiveness.

(vi) The employer must inform any person who launders, cleans, or repairs such clothing or equipment of formaldehyde's potentially harmful effects and of procedures to safely handle the clothing and equipment.

(9) **Hygiene protection**.

(a) The employer must provide change rooms, as described in WAC 296-800-230 for employees who are required to change from work clothing into protective clothing to prevent skin contact with formaldehyde.

(b) If employees' skin may become splashed with solutions containing one percent or greater formaldehyde, for example because of equipment failure or improper work practices, the employer must provide conveniently located quick drench showers and ensure that affected employees use these facilities immediately.

(c) If there is any possibility that an employee's eyes may be splashed with solutions containing 0.1 percent or greater formaldehyde, the employer must provide acceptable eyewash facilities within the immediate work area for emergency use.

(10) **Housekeeping**. For operations involving formaldehyde liquids or gas, the employer must conduct a program to detect leaks and spills, including regular visual inspections.

(a) Preventative maintenance of equipment, including surveys for leaks, must be undertaken at regular intervals.

(b) In work areas where spillage may occur, the employer shall make provisions to contain the spill, to decontaminate the work area, and to dispose of the waste.

(c) The employer must ensure that all leaks are repaired and spills are cleaned promptly by employees wearing suitable protective equipment and trained in proper methods for cleanup and decontamination.

(d) Formaldehyde-contaminated waste and debris resulting from leaks or spills must be placed for disposal in sealed containers bearing a label warning of formaldehyde's presence and of the hazards associated with formaldehyde.

(11) **Emergencies**. For each workplace where there is the possibility of an emergency involving formaldehyde, the employer must ensure appropriate procedures are adopted to minimize injury and loss of life. Appropriate procedures must be implemented in the event of an emergency.

(12) **Medical surveillance**.

(a) Employees covered.

(i) The employer must institute medical surveillance programs for all employees exposed to formaldehyde at concentrations at or exceeding the action level or exceeding the STEL.

(ii) The employer must make medical surveillance available for employees who develop signs and symptoms of overexposure to formaldehyde and for all employees exposed to formaldehyde in emergencies. When determining whether an employee may be experiencing signs and symptoms of possible overexposure to formaldehyde, the employer may rely on the evidence that signs and symptoms associated with formaldehyde exposure will occur only in exceptional circumstances when airborne exposure is less than 0.1 ppm and when formaldehyde is present in materials in concentrations less than 0.1 percent.

(b) Examination by a physician. All medical procedures, including administration of medical disease questionnaires, must be performed by or under the supervision of a licensed physician and shall be provided without cost to the employee, without loss of pay, and at a reasonable time and place.

(c) Medical disease questionnaire. The employer must make the following medical surveillance available to employees prior to assignment to a job where formaldehyde exposure is at or above the action level or above the STEL and annually thereafter. The employer must also make the following medical surveillance available promptly upon determining that an employee is experiencing signs and symptoms indicative of possible overexposure to formaldehyde.

(i) Administration of a medical disease questionnaire, such as in Appendix D, which is designed to elicit information on work history, smoking history, any evidence of eye, nose, or throat irritation; chronic airway problems or hyperreactive airway disease; allergic skin conditions or dermatitis; and upper or lower respiratory problems.

(ii) A determination by the physician, based on evaluation of the medical disease questionnaire, of whether a medical examination is necessary for employees not required to wear respirators to reduce exposure to formaldehyde.

(d) Medical examinations. Medical examinations must be given to any employee who the physician feels, based on information in the medical disease questionnaire, may be at increased risk from exposure to formaldehyde and at the time of initial assignment and at least annually thereafter to all employees required to wear a respirator to reduce exposure to formaldehyde. The medical examination must include:

(i) A physical examination with emphasis on evidence of irritation or sensitization of the skin and respiratory system, shortness of breath, or irritation of the eyes.

(ii) Laboratory examinations for respirator wearers consisting of baseline and annual pulmonary function tests. As a minimum, these tests must consist of forced vital capacity (FVC), forced expiratory volume in one second (FEV1), and forced expiratory flow (FEF).

(iii) Any other test which the examining physician deems necessary to complete the written opinion.

(iv) Counseling of employees having medical conditions that would be directly or indirectly aggravated by exposure to formaldehyde on the increased risk of impairment of their health.

(e) Examinations for employees exposed in an emergency. The employer must make medical examinations available as soon as possible to all employees who have been exposed to formaldehyde in an emergency.

(i) The examination must include a medical and work history with emphasis on any evidence of upper or lower respiratory problems, allergic conditions, skin reaction or hypersensitivity, and any evidence of eye, nose, or throat irritation.

(ii) Other examinations must consist of those elements considered appropriate by the examining physician.

(f) Information provided to the physician. The employer must provide the following information to the examining physician:

(i) A copy of this standard and Appendices A, C, D, and E;

(ii) A description of the affected employee's job duties as they relate to the employee's exposure to formaldehyde;

(iii) The representative exposure level for the employee's job assignment;

(iv) Information concerning any personal protective equipment and respiratory protection used or to be used by the employee; and

(v) Information from previous medical examinations of the affected employee within the control of the employer.

(vi) In the event of a nonroutine examination because of an emergency, the employer must provide to the physician as soon as possible: A description of how the emergency occurred and the exposure the victim may have received.

(g) Physician's written opinion.

(i) For each examination required under this standard, the employer must obtain a written opinion from the examining physician. This written opinion must contain the results of the medical examination except that it must not reveal specific findings or diagnoses unrelated to occupational exposure to formaldehyde. The written opinion must include:

(A) The physician's opinion as to whether the employee has any medical condition that would place the employee at an increased risk of material impairment of health exposure to formaldehyde.

(B) Any recommended limitations on the employee's exposure or changes in the use of personal protective equipment, including respirators;

(C) A statement that the employee has been informed by the physician of any medical conditions which would be aggravated by exposure to formaldehyde, whether these conditions may have resulted from past formaldehyde exposure or from exposure in an emergency, and whether there is a need for further examination or treatment.

(ii) The employer must provide for retention of the results of the medical examination and tests conducted by the physician.

(iii) The employer must provide a copy of the physician's written opinion to the affected employee within fifteen days of its receipt.

(h) Medical removal.

(i) The provisions of this subdivision apply when an employee reports significant irritation of the mucosa of the eyes or of the upper airways, respiratory sensitization, dermal irritation, or dermal sensitization attributed to workplace formaldehyde exposure. Medical removal provisions do not apply in case of dermal irritation or dermal sensitization when the product suspected of causing the dermal condition contains less than 0.05% formaldehyde.

(ii) An employee's report of signs or symptoms of possible overexposure to formaldehyde must be evaluated by a physician selected by the employer pursuant to (c) of this subsection. If the physician determines that a medical examination is not necessary under (c)(ii) of this subsection, there must be a two-week evaluation and remediation period to permit the employer to ascertain whether the signs or symptoms subside untreated or with the use of creams, gloves, first aid treatment, or personal protective equipment. Industrial hygiene measures that limit the employee's exposure to formaldehyde may also be implemented during this period. The employee must be referred immediately to a physician prior to expiration of the two-week period if the signs or symptoms worsen. Earnings, seniority, and benefits may not be altered during the two-week period by virtue of the report.

(iii) If the signs or symptoms have not subsided or been remedied by the end of the two-week period, or earlier if signs or symptoms warrant, the employee must be examined by a physician selected by the employer. The physician must presume, absent contrary evidence, that observed dermal irritation or dermal sensitization are not attributable to formaldehyde when products to which the affected employee is exposed contain less than 0.1% formaldehyde.

(iv) Medical examinations must be conducted in compliance with the requirements of (e)(i) and (ii) of this subsection. Additional guidelines for conducting medical exams are contained in WAC 296-62-07546, Appendix C.

(v) If the physician finds that significant irritation of the mucosa of the eyes or the upper airways, respiratory sensitization, dermal irritation, or dermal sensitization result from workplace formaldehyde exposure and recommends restrictions or removal. The employer must promptly comply with the restrictions or recommendations of removal. In the event of a recommendation of removal, the employer must remove the affected employee from the current formaldehyde exposure and if possible, transfer the employee to work having no or significantly less exposure to formaldehyde.

(vi) When an employee is removed pursuant to item (v) of this subdivision, the employer must transfer the employee to comparable work for which the employee is qualified or can be trained in a short period (up to six months), where the formaldehyde exposures are as low as possible, but not higher than the action level. The employer must maintain the employee's current earnings, seniority, and other benefits. If there is no such work available, the employer must maintain the employee's current earnings, seniority, and other benefits until such work becomes available, until the employee is determined to be unable to return to workplace formaldehyde exposure, until the employee is determined to be able to return to the original job status, or for six months, whichever comes first.

(vii) The employer must arrange for a follow-up medical examination to take place within six months after the employee is removed pursuant to this subsection. This examination must determine if the employee can return to the original job status, or if the removal is to be permanent. The physician must make a decision within six months of the date the employee was removed as to whether the employee can be returned to the original job status, or if the removal is to be permanent.

(viii) An employer's obligation to provide earnings, seniority, and other benefits to a removed employee may be reduced to the extent that the employee receives compensation for earnings lost during the period of removal either from a publicly or employer-funded compensation program or from employment with another employer made possible by virtue of the employee's removal.

(ix) In making determinations of the formaldehyde content of materials under this subsection the employer may rely on objective data.

(i) Multiple physician review.

(i) After the employer selects the initial physician who conducts any medical examination or consultation to determine whether medical removal or restriction is appropriate, the employee may designate a second physician to review any findings, determinations, or recommendations of the initial physician and to conduct such examinations, consultations, and laboratory tests as the second physician deems necessary and appropriate to evaluate the effects of formaldehyde exposure and to facilitate this review.

(ii) The employer must promptly notify an employee of the right to seek a second medical opinion after each occasion that an initial physician conducts a medical examination or consultation for the purpose of medical removal or restriction.

(iii) The employer may condition its participation in, and payment for, the multiple physician review mechanism upon the employee doing the following within fifteen days after receipt of the notification of the right to seek a second medical opinion, or receipt of the initial physician's written opinion, whichever is later:

(A) The employee informs the employer of the intention to seek a second medical opinion; and

(B) The employee initiates steps to make an appointment with a second physician.

(iv) If the findings, determinations, or recommendations of the second physician differ from those of the initial physician, then the employer and the employee must ensure that efforts are made for the two physicians to resolve the disagreement. If the two physicians are unable to quickly resolve their disagreement, then the employer and the employee through their respective physicians must designate a third physician who must be a specialist in the field at issue:

(A) To review the findings, determinations, or recommendations of the prior physicians; and

(B) To conduct such examinations, consultations, laboratory tests, and discussions with prior physicians as the third physician deems necessary to resolve the disagreement of the prior physicians.

(v) In the alternative, the employer and the employee or authorized employee representative may jointly designate such third physician.

(vi) The employer must act consistent with the findings, determinations, and recommendations of the third physician, unless the employer and the employee reach an agreement which is otherwise consistent with the recommendations of at least one of the three physicians.

(13) **Hazard communication**.

(a) General. Notwithstanding any exemption granted in WAC 296-901-140 for wood products, each employer who has a workplace covered by this standard must comply with the requirements of WAC 296-901-140. The definitions of the hazard communication standard shall apply under this standard.

(i) The following shall be subject to the hazard communication requirements of this section: Formaldehyde gas, all mixtures or solutions composed of greater than 0.1 percent formaldehyde, and materials capable of releasing formaldehyde into the air under reasonably foreseeable concentrations reaching or exceeding 0.1 ppm.

(ii) As a minimum, specific health hazards that the employer must address are: Cancer, irritation and sensitization of the skin and respiratory system, eye and throat irritation, and acute toxicity.

(b) Manufacturers and importers who produce or import formaldehyde or formaldehyde-containing products must provide downstream employers using or handling these products with an objective determination through the required labels and SDSs as required by WAC 296-901-140.

(c) Labels.

(i) The employer must ensure that hazard warning labels complying with the requirements of WAC 296-901-140 are affixed to all containers of materials listed in (a)(i) of this subsection, except to the extent that (a)(i) of this subsection is inconsistent with this item.

(ii) Information on labels. As a minimum, for all materials listed in (a)(i) of this subsection, capable of releasing formaldehyde at levels of 0.1 ppm to 0.5 ppm, labels must identify that the product contains formaldehyde: List the name and address of the responsible party; and state that physical and health hazard information is readily available from the employer and from safety data sheets.

(iii) For materials listed in (a)(i) of this subsection, capable of releasing formaldehyde at levels above 0.5 ppm, labels shall appropriately address all the hazards as defined in WAC 296-901-140, and Appendices A and B, including respiratory sensitization, and must contain the words "Potential Cancer Hazard."

(iv) In making the determinations of anticipated levels of formaldehyde release, the employer may rely on objective data indicating the extent of potential formaldehyde release under reasonably foreseeable conditions of use.

(v) Substitute warning labels. The employer may use warning labels required by other statutes, regulations, or ordinances which impart the same information as the warning statements required by this subitem.

(d) Safety data sheets.

(i) Any employer who uses formaldehyde-containing materials listed in (a)(i) of this subsection must comply with the requirements of WAC 296-901-140 with regard to the development and updating of safety data sheets.

(ii) Manufacturers, importers, and distributors of formaldehyde containing materials listed in (a)(i) of this subsection must ensure that safety data sheets and updated information are provided to all employers purchasing such materials at the time of the initial shipment and at the time of the first shipment after a safety data sheet is updated.

(e) Written hazard communication program. The employer must develop, implement, and maintain at the workplace, a written chemical hazard communication program for formaldehyde exposures in the workplace, which at a minimum describes how the requirements specified in this section for labels and other forms of warning and safety data sheets, and subsection (14) of this section for employee information and training, will be met. Employees in multi-employer workplaces must comply with the requirements of WAC 296-901-140.

(14) **Employee information and training**.

(a) Participation. The employer must ensure that all employees who are assigned to workplaces where there is a health hazard from formaldehyde participate in a training program, except that where the employer can show, using objective data, that employees are not exposed to formaldehyde at or above 0.1 ppm, the employer is not required to provide training.

(b) Frequency. Employers must provide such information and training to employees at the time of their initial assignment and whenever a new exposure to formaldehyde is introduced into their work area. The training must be repeated at least annually.

(c) Training program. The training program must be conducted in a manner which the employee is able to understand and must include:

(i) A discussion of the contents of this regulation and the contents of the safety data sheet;

(ii) The purpose for and a description of the medical surveillance program required by this standard, including:

(A) A description of the potential health hazards associated with exposure to formaldehyde and a description of the signs and symptoms of exposure to formaldehyde.

(B) Instructions to immediately report to the employer the development of any adverse signs or symptoms that the employee suspects is attributable to formaldehyde exposure.

(iii) Description of operations in the work area where formaldehyde is present and an explanation of the safe work practices appropriate for limiting exposure to formaldehyde in each job;

(iv) The purpose for, proper use of, and limitations of personal protective clothing;

(v) Instructions for the handling of spills, emergencies, and clean-up procedures;

(vi) An explanation of the importance of engineering and work practice controls for employee protection and any necessary instruction in the use of these controls;

(vii) A review of emergency procedures including the specific duties or assignments of each employee in the event of an emergency; and

(viii) The purpose, proper use, limitations, and other training requirements for respiratory protection as required by chapter 296-842 WAC.

(d) Access to training materials.

(i) The employer must inform all affected employees of the location of written training materials and must make these materials readily available, without cost, to the affected employees.

(ii) The employer must provide, upon request, all training materials relating to the employee training program to the director of labor and industries, or their designated representative.

(15) **Recordkeeping**.

(a) Exposure measurements. The employer must establish and maintain an accurate record of all measurements taken to monitor employee exposure to formaldehyde. This record must include:

(i) The date of measurement;

(ii) The operation being monitored;

(iii) The methods of sampling and analysis and evidence of their accuracy and precision;

(iv) The number, durations, time, and results of samples taken;

(v) The types of protective devices worn; and

(vi) The names, job classifications, Social Security numbers, and exposure estimates of the employees whose exposures are represented by the actual monitoring results.

(b) Exposure determinations. Where the employer has determined that no monitoring is required under this standard, the employer must maintain a record of the objective data relied upon to support the determination that no employee is exposed to formaldehyde at or above the action level.

(c) Medical surveillance. The employer must establish and maintain an accurate record for each employee subject to medical surveillance under this standard. This record must include:

(i) The name and Social Security number of the employee;

(ii) The physician's written opinion;

(iii) A list of any employee health complaints that may be related to exposure to formaldehyde; and

(iv) A copy of the medical examination results, including medical disease questionnaires and results of any medical tests required by the standard or mandated by the examining physician.

(d) Records retention. The employer must retain records required by this standard for at least the following periods:

(i) Exposure records and determinations must be kept for at least thirty years; and

(ii) Medical records must be kept for the duration of employment plus thirty years;

(e) Availability of records.

(i) Upon request, the employer must make all records maintained as a requirement of this standard available for examination and copying to the director of labor and industries, or their designated representative.

(ii) The employer must make employee exposure records, including estimates made from representative monitoring and available upon request for examination and copying, to the subject employee, or former employee, and employee representatives in accordance with chapter 296-802 WAC.

(iii) Employee medical records required by this standard must be provided upon request for examination and copying, to the subject employee, or former employee, or to anyone having the specific written consent of the subject employee or former employee in accordance with chapter 296-802 WAC.

WAC 296-62-07542 Appendix A--Substance technical guideline for formalin.

(1) The following substance technical guideline for formalin provides information on uninhibited formalin solution (thirty-seven percent formaldehyde, no methanol stabilizer). It is designed to inform employees at the production level of their rights and duties under the formaldehyde standard whether their job title defines them as workers or supervisors. Much of the information provided is general; however, some information is specific for formalin. When employee exposure to formaldehyde is from resins capable of releasing formaldehyde, the resin itself and other impurities or decomposition products may also be toxic, and employers should include this information as well when informing employees of the hazards associated with the materials they handle. The precise hazards associated with exposure to formaldehyde depend both on the form (solid, liquid, or gas) of the material and the concentration of formaldehyde present. For example, thirty-seven to fifty percent solutions of formaldehyde present a much greater hazard to the skin and eyes from spills or splashes than solutions containing less than one percent formaldehyde. Individual substance technical guidelines used by the employer for training employees should be modified to properly give information on the material actually being used.

(a) Substance identification.

(i) Chemical name: Formaldehyde.

(ii) Chemical family: Aldehyde.

(iii) Chemical formula: HCHO.

(iv) Molecular weight: 30.03.

(v) Chemical abstracts service number (CAS number): 50-00-0.

Synonyms: Formalin; Formic Aldehyde; Paraform; Formol; Formalin (Methanol-free); Fyde; Formalith; Methanal; Methyl Aldehyde; Methylene Glycol; Methylene Oxide; Tetraoxymethalene; Oxomethane; Oxymethylene.

(b) Components and contaminants.

(i) Percent: 37.0 Formaldehyde.

(ii) Percent: 63.0 water.

Note: Inhibited solutions contain methanol.

(iii) Other contaminants: Formic acid (alcohol free).

Exposure limits:

(A) WISHA TWA-0.75 ppm.

(B) WISHA STEL-2 ppm.

(c) Physical data.

(i) Description: Colorless liquid, pungent odor.

(ii) Boiling point: 214°F (101°C).

(iii) Specific gravity: 1.08 (H2O = 1 @ 20 C).

(iv) pH: 2.8-4.0.

(v) Solubility in water: Miscible.

(vi) Solvent solubility: Soluble in alcohol and acetone.

(vii) Vapor density: 1.04 (Air = 1 @ 20 C).

(viii) Odor threshold: 0.8-1 ppm.

(d) Fire and explosion hazard.

(i) Moderate fire and explosion hazard when exposed to heat or flame.

(ii) The flash point of thirty-seven percent formaldehyde solutions is above normal room temperature, but the explosion range is very wide, from seven to seventy-three percent by volume in air.

(iii) Reaction of formaldehyde with nitrogen dioxide, nitromethane, perchloric acid and aniline, or peroxyformic acid yields explosive compounds.

(iv) Flash point: 185°F (85°C) closed cup.

(v) Lower explosion limit: Seven percent.

(vi) Upper explosion limit: Seventy-three percent.

(vii) Autoignition temperature: 806°F (430°C).

(viii) Flammable class (WISHA): III A.

Extinguishing media:

(I) Use dry chemical, "alcohol foam," carbon dioxide, or water in flooding amounts as fog. Solid streams may not be effective. Cool fire-exposed containers with water from side until well after fire is out.

(II) Use of water spray to flush spills can also dilute the spill to produce nonflammable mixtures. Water runoff, however, should be contained for treatment.

(ix) National Fire Protection Association Section 325M Designation:

(A) Health: 2-Materials hazardous to health, but areas may be entered with full-faced mask self-contained breathing apparatus which provides eye protection.

(B) Flammability: 2-Materials which must be moderately heated before ignition will occur. Water spray may be used to extinguish the fire because the material can be cooled below its flash point.

(C) Reactivity: D-Materials which (in themselves) are normally stable even under fire exposure conditions and which are not reactive with water. Normal firefighting procedures may be used.

(e) Reactivity.

(i) Stability: Formaldehyde solutions may self-polymerize to form paraformaldehyde which precipitates.

(ii) Incompatibility (materials to avoid):

(A) Strong oxidizing agents, caustics, strong alkalies, isocyanates, anhydrides, oxides, and inorganic acids.

(B) Formaldehyde reacts with hydrochloric acid to form the potent carcinogen, bis-chloromethyl ether. Formaldehyde reacts with nitrogen dioxide, nitromethane, perchloric acid and aniline, or peroxyformic acid to yield explosive compounds. A violent reaction occurs when formaldehyde is mixed with strong oxidizers.

(C) Hazardous combustion or decomposition products: Oxygen from the air can oxidize formaldehyde to formic acid, especially when heated. Formic acid is corrosive.

(f) Health hazard data.

(i) Acute effects of exposure.

(A) Ingestion (swallowing): Liquids containing ten to forty percent formaldehyde cause severe irritation and inflammation of the mouth, throat, and stomach. Severe stomach pains will follow ingestion with possible loss of consciousness and death. Ingestion of dilute formaldehyde solutions (0.03-0.04%) may cause discomfort in the stomach and pharynx.

(B) Inhalation (breathing):

(I) Formaldehyde is highly irritating to the upper respiratory tract and eyes. Concentrations of 0.5 to 2.0 ppm may irritate the eyes, nose, and throat of some individuals.

(II) Concentrations of 3 to 5 ppm also cause tearing of the eyes and are intolerable to some persons.

(III) Concentrations of 10 to 20 ppm cause difficulty in breathing, burning of the nose and throat, coughing, and heavy tearing of the eyes, and 25 to 30 ppm causes severe respiratory tract injury leading to pulmonary edema and pneumonitis. A concentration of 100 ppm is immediately dangerous to life and health. Deaths from accidental exposure to high concentrations of formaldehyde have been reported.

(C) Skin (dermal): Formalin is a severe skin irritant and a sensitizer. Contact with formalin causes white discoloration, smarting, drying, cracking, and scaling. Prolonged and repeated contact can cause numbness and a hardening or tanning of the skin. Previously exposed persons may react to future exposure with an allergic eczematous dermatitis or hives.

(D) Eye contact: Formaldehyde solutions splashed in the eye can cause injuries ranging from transient discomfort to severe, permanent corneal clouding and loss of vision. The severity of the effect depends on the concentration of formaldehyde in the solution and whether or not the eyes are flushed with water immediately after the accident.

Note: The perception of formaldehyde by odor and eye irritation becomes less sensitive with time as one adapts to formaldehyde. This can lead to overexposure if a worker is relying on formaldehyde's warning properties to alert him or her to the potential for exposure.

(E) Acute animal toxicity:

(I) Oral, rats: LD50 = 800 mg/kg.

(II) Oral, mouse: LD50 = 42 mg/kg.

(III) Inhalation, rats: LC50 = 250 mg/kg.

(IV) Inhalation, mouse: LC50 = 900 mg/kg.

(V) Inhalation, rats: LC50 = 590 mg/kg.

(g) Chronic effects of exposure.

(i) Carcinogenicity: Formaldehyde has the potential to cause cancer in humans. Repeated and prolonged exposure increases the risk. Various animal experiments have conclusively shown formaldehyde to be a carcinogen in rats. In humans, formaldehyde exposure has been associated with cancers of the lung, nasopharynx and oropharynx, and nasal passages.

(ii) Mutagenicity: Formaldehyde is genotoxic in several in vitro test systems showing properties of both an initiator and a promoter.

(iii) Toxicity: Prolonged or repeated exposure to formaldehyde may result in respiratory impairment. Rats exposed to formaldehyde at 2 ppm developed benign nasal tumors and changes of the cell structure in the nose as well as inflamed mucous membranes of the nose. Structural changes in the epithelial cells in the human nose have also been observed. Some persons have developed asthma or bronchitis following exposure to formaldehyde, most often as the result of an accidental spill involving a single exposure to a high concentration of formaldehyde.

(h) Emergency and first-aid procedures.

(i) Ingestion (swallowing): If the victim is conscious, dilute, inactivate, or absorb the ingested formaldehyde by giving milk, activated charcoal, or water. Any organic material will inactivate formaldehyde. Keep affected person warm and at rest. Get medical attention immediately. If vomiting occurs, keep head lower than hips.

(ii) Inhalation (breathing): Remove the victim from the exposure area to fresh air immediately. Where the formaldehyde concentration may be very high, each rescuer must put on a self-contained breathing apparatus before attempting to remove the victim, and medical personnel should be informed of the formaldehyde exposure immediately. If breathing has stopped, give artificial respiration. Keep the affected person warm and at rest. Qualified first-aid or medical personnel should administer oxygen, if available, and maintain the patient's airways and blood pressure until the victim can be transported to a medical facility. If exposure results in a highly irritated upper respiratory tract and coughing continues for more than ten minutes, the worker should be hospitalized for observation and treatment.

(iii) Skin contact: Remove contaminated clothing (including shoes) immediately. Wash the affected area of your body with soap or mild detergent and large amounts of water until no evidence of the chemical remains (at least fifteen to twenty minutes). If there are chemical burns, get first aid to cover the area with sterile, dry dressing, and bandages. Get medical attention if you experience appreciable eye or respiratory irritation.

(iv) Eye contact: Wash the eyes immediately with large amounts of water occasionally lifting lower and upper lids, until no evidence of chemical remains (at least fifteen to twenty minutes). In case of burns, apply sterile bandages loosely without medication. Get medical attention immediately. If you have experienced appreciable eye irritation from a splash or excessive exposure, you should be referred promptly to an ophthalmologist for evaluation.

(b) Emergency procedures.

(i) Emergencies:

(A) If you work in an area where a large amount of formaldehyde could be released in an accident or from equipment failure, your employer must develop procedures to be followed in event of an emergency. You should be trained in your specific duties in the event of an emergency, and it is important that you clearly understand these duties. Emergency equipment must be accessible and you should be trained to use any equipment that you might need. Formaldehyde contaminated equipment must be cleaned before reuse.

(B) If a spill of appreciable quantity occurs, leave the area quickly unless you have specific emergency duties. Do not touch spilled material. Designated persons may stop the leak and shut off ignition sources if these procedures can be done without risk. Designated persons should isolate the hazard area and deny entry except for necessary people protected by suitable protective clothing and respirators adequate for the exposure. Use water spray to reduce vapors. Do not smoke, and prohibit all flames or flares in the hazard area.

(ii) Special firefighting procedures:

(A) Learn procedures and responsibilities in the event of a fire in your workplace.

(B) Become familiar with the appropriate equipment and supplies and their location.

(C) In firefighting, withdraw immediately in case of rising sound from venting safety device or any discoloration of storage tank due to fire.

(c) Spill, leak, and disposal procedures.

(i) Occupational spill: For small containers, place the leaking container in a well-ventilated area. Take up small spills with absorbent material and place the waste into properly labeled containers for later disposal. For larger spills, dike the spill to minimize contamination and facilitate salvage or disposal. You may be able to neutralize the spill with sodium hydroxide or sodium sulfite. Your employer must comply with EPA rules regarding the clean-up of toxic waste and notify state and local authorities, if required. If the spill is greater than 1,000 lb/day, it is reportable under EPA's superfund legislation.

(ii) Waste disposal: Your employer must dispose of waste containing formaldehyde in accordance with applicable local, state, and federal law and in a manner that minimizes exposure of employees at the site and of the clean-up crew.

(d) Monitoring and measurement procedures.

(i) Monitoring requirements: If your exposure to formaldehyde exceeds the 0.5 ppm action level or the 2 ppm STEL, your employer must monitor your exposure. Your employer need not measure every exposure if a “high exposure” employee can be identified. This person usually spends the greatest

amount of time nearest the process equipment. If you are a "representative employee," you will be asked to wear a sampling device to collect formaldehyde. This device may be a passive badge, a sorbent tube attached to a pump, or an impinger containing liquid. You should perform your work as usual, but inform the person who is conducting the monitoring of any difficulties you are having wearing the device.

(ii) Evaluation of 8-hour exposure: Measurements taken for the purpose of determining time-weighted average (TWA) exposures are best taken with samples covering the full shift. Samples collected must be taken from the employee's breathing zone air.

(iii) Short-term exposure evaluation: If there are tasks that involve brief but intense exposure to formaldehyde, employee exposure must be measured to assure compliance with the STEL. Sample collections are for brief periods, only fifteen minutes, but several samples may be needed to identify the peak exposure.

(iv) Monitoring techniques: WISHA's only requirement for selecting a method for sampling and analysis is that the methods used accurately evaluate the concentration of formaldehyde in employees' breathing zones. Sampling and analysis may be performed by collection of formaldehyde on liquid or solid sorbents with subsequent chemical analysis. Sampling and analysis may also be performed by passive diffusion monitors and short-term exposure may be measured by instruments such as real-time continuous monitoring systems and portable direct reading instruments.

(v) Notification of results: Your employer must inform you of the results of exposure monitoring representative of your job. You may be informed in writing, but posting the results where you have ready access to them constitutes compliance with the standard.

(e) Protective equipment and clothing.

(Material impervious to formaldehyde is needed if the employee handles formaldehyde solutions of one percent or more. Other employees may also require protective clothing or equipment to prevent dermatitis.)

(i) Respiratory protection. Use NIOSH-approved full facepiece negative pressure respirators equipped with approved cartridges or canisters within the use limitations of these devices. (Present restrictions on cartridges and canisters do not permit them to be used for a full workshift.) In all other situations, use positive pressure respirators such as the positive-pressure air purifying respirator or the self-contained breathing apparatus (SCBA).

(ii) Protective gloves:

(A) Wear protective (impervious) gloves provided by your employer, at no cost, to prevent contact with formalin.

(B) Your employer should select these gloves based on the results of permeation testing and in accordance with the ACGIH guidelines for selection of chemical protective clothing.

(iii) Eye protection:

(A) If you might be splashed in the eyes with formalin, it is essential that you wear goggles or some other type of complete protection for the eye.

(B) You may also need a face shield if your face is likely to be splashed with formalin, but you must not substitute face shields for eye protection. (This section pertains to formaldehyde solutions of one percent or more.)

(iv) Other protective equipment:

(A) You must wear protective (impervious) clothing and equipment provided by your employer at no cost to prevent repeated or prolonged contact with formaldehyde liquids.

(B) If you are required to change into whole-body chemical protective clothing, your employer must provide a change room for your privacy and for storage of your normal clothing.

(C) If you are splashed with formaldehyde, use the emergency showers and eyewash fountains provided by your employer immediately to prevent serious injury. Report the incident to your supervisor and obtain necessary medical support.

(2) **Entry into an IDLH atmosphere**. Enter areas where the formaldehyde concentration might be 100 ppm or more only with complete body protection including a self-contained breathing apparatus with a full facepiece operated in a positive pressure mode or a supplied-air respirator with full facepiece and operated in a positive pressure mode. This equipment is essential to protect your life and health under such extreme conditions.

(a) Engineering controls.

(i) Ventilation is the most widely applied engineering control method for reducing the concentration of airborne substances in the breathing zones of workers. There are two distinct types of ventilation.

(ii) Local exhaust: Local exhaust ventilation is designed to capture airborne contaminants as near to the point of generation as possible. To protect you, the direction of contaminant flow must always be toward the local exhaust system inlet and away from you.

(iii) General (mechanical):

(A) General dilution ventilation involves continuous introduction of fresh air into the workroom to mix with the contaminated air and lower your breathing zone concentration of formaldehyde. Effectiveness depends on the number of air changes per hour.

(B) Where devices emitting formaldehyde are spread out over a large area, general dilution ventilation may be the only practical method of control.

(iv) Work practices: Work practices and administrative procedures are an important part of a control system. If you are asked to perform a task in a certain manner to limit your exposure to formaldehyde, it is extremely important that you follow these procedures.

(b) Medical surveillance.

(i) Medical surveillance helps to protect employees' health. You are encouraged strongly to participate in the medical surveillance program.

(ii) Your employer must make a medical surveillance program available at no expense to you and at a reasonable time and place if you are exposed to formaldehyde at concentrations above 0.5 ppm as an 8-hour average or 2 ppm over any fifteen-minute period.

(A) You will be offered medical surveillance at the time of your initial assignment and once a year afterward as long as your exposure is at least 0.5 ppm (action level) or 2 ppm (STEL).

(B) Even if your exposure is below these levels, you should inform your employer if you have signs and symptoms that you suspect, through your training, are related to your formaldehyde exposure because you may need medical surveillance to determine if your health is being impaired by your exposure.

(iii) The surveillance plan includes:

(A) A medical disease questionnaire.

(B) A physical examination if the physician determines this is necessary.

(iv) If you are required to wear a respirator, your employer must offer you a physical examination and a pulmonary function test every year.

(v) The physician must collect all information needed to determine if you are at increased risk from your exposure to formaldehyde. At the physician's discretion, the medical examination may include other tests, such as a chest x-ray, to make this determination.

(vi) After a medical examination the physician will provide your employer with a written opinion which includes any special protective measures recommended and any restrictions on your exposure. The physician must inform you of any medical conditions you have which would be aggravated by exposure to formaldehyde. All records from your medical examinations, including disease surveys, must be retained at your employer's expense.

(c) Emergencies.

(i) If you are exposed to formaldehyde in an emergency and develop signs or symptoms associated with acute toxicity from formaldehyde exposure, your employer must provide you with a medical examination as soon as possible.

(ii) This medical examination will include all steps necessary to stabilize your health.

(iii) You may be kept in the hospital for observation if your symptoms are severe to ensure that any delayed effects are recognized and treated.

WAC 296-62-07544 Appendix B--Sampling strategy and analytical methods for formaldehyde.

(1) To protect the health of employees, exposure measurements must be unbiased and representative of employee exposure. The proper measurement of employee exposure requires more than a token commitment on the part of the employer. WISHA's mandatory requirements establish a baseline; under the best of circumstances all questions regarding employee exposure will be answered. Many employers, however, will wish to conduct more extensive monitoring before undertaking expensive commitments, such as engineering controls to ensure that the modifications are truly necessary. The following sampling strategy, which was developed at NIOSH by Nelson A. Leidel, Kenneth A. Busch, and Jeremiah R. Lynch and described in NIOSH publication No. 77-173 (Occupational Exposure Sampling Strategy Manual) will assist the employer in developing a strategy for determining the exposure of their employees.

(2) There is no one correct way to determine employee exposure. Obviously, measuring the exposure of every employee exposed to formaldehyde will provide the most information on any given day. Where few employees are exposed, this may be a practical solution. For most employers, however, use of the following strategy will give just as much information at less cost.

(3) Exposure data collected on a single day will not automatically guarantee the employer that their workplace is always in compliance with the formaldehyde standard. This does not imply, however, that it is impossible for an employer to be sure that their worksite is in compliance with the standard. Indeed, a properly designed sampling strategy showing that all employees are exposed below the PELs, at least with a ninety-five percent certainty, is compelling evidence that the exposure limits are being achieved provided that measurements are conducted using valid sampling strategy and approved analytical methods.

(4) **There are two PELs, the TWA concentration and the STEL**.

(a) Most employers will find that one of these two limits is more critical in the control of their operations, and WISHA expects that the employer will concentrate monitoring efforts on the critical component.

(b) If the more difficult exposure is controlled, this information, along with calculations to support the assumptions, should be adequate to show that the other exposure limit is also being achieved.

(5) **Sampling strategy**.

(a) Determination of the need for exposure measurements.

(b) The employer must determine whether employees may be exposed to concentrations in excess of the action level. This determination becomes the first step in an employee exposure monitoring program that minimizes employer sampling burdens while providing adequate employee protection.

(c) If employees may be exposed above the action level, the employer must measure exposure. Otherwise, an objective determination that employee exposure is low provides adequate evidence that exposure potential has been examined.

(d) The employer should examine all available relevant information, e.g., insurance company and trade association data and information from suppliers or exposure data collected from similar operations.

(e) The employer may also use previously-conducted sampling including area monitoring. The employer must make a determination relevant to each operation although this need not be on a separate piece of paper.

(f) If the employer can demonstrate conclusively that no employee is exposed above the action level or the STEL through the use of objective data, the employer need proceed no further on employee exposure monitoring until such time that conditions have changed and the determination is no longer valid.

(g) If the employer cannot determine that employee exposure is less than the action level and the STEL, employee exposure monitoring will have to be conducted.

(6) **Workplace material survey**.

(a) The primary purpose of a survey of raw material is to determine if formaldehyde is being used in the work environment and if so, the conditions under which formaldehyde is being used.

(b) The first step is to tabulate all situations where formaldehyde is used in a manner such that it may be released into the workplace atmosphere or contaminate the skin. This information should be available through analysis of company records and information on the SDS available through provisions of this standard and the hazard communication standard.

(c) If there is an indication from materials handling records and accompanying SDS that formaldehyde is being used in the following types of processes or work operations, there may be a potential for releasing formaldehyde into the workplace atmosphere:

(i) Any operation that involves grinding, sanding, sawing, cutting, crushing, screening, sieving, or any other manipulation of material that generates formaldehyde-bearing dust.

(ii) Any processes where there have been employee complaints or symptoms indicative of exposure to formaldehyde.

(iii) Any liquid or spray process involving formaldehyde.

(iv) Any process that uses formaldehyde in preserved tissue.

(v) Any process that involves the heating of a formaldehyde-bearing resin.

Processes and work operations that use formaldehyde in these manners will probably require further investigation at the worksite to determine the extent of employee monitoring that should be conducted.

(7) **Workplace observations**.

(a) To this point, the only intention has been to provide an indication as to the existence of potentially exposed employees. With this information, a visit to the workplace is needed to observe work operations, to identify potential health hazards, and to determine whether any employees may be exposed to hazardous concentrations of formaldehyde.

(b) In many circumstances, sources of formaldehyde can be identified through the sense of smell. However, this method of detection should be used with caution because of olfactory fatigue.

(c) Employee location in relation to source of formaldehyde is important in determining if an employee may be significantly exposed to formaldehyde. In most instances, the closer a worker is to the source, the higher the probability that a significant exposure will occur.

(d) Other characteristics should be considered. Certain high temperature operations give rise to higher evaporation rates. Locations of open doors and windows provide natural ventilation that tend to dilute formaldehyde emissions. General room ventilation also provides a measure of control.

(8) **Calculation of potential exposure concentrations**.

(a) By knowing the ventilation rate in a workplace and the quantity of formaldehyde generated, the employer may be able to determine by calculation if the PELs might be exceeded.

(b) To account for poor mixing of formaldehyde into the entire room, locations of fans and proximity of employees to the work operation, the employer must include a safety factor.

(c) If an employee is relatively close to a source, particularly if they are located downwind, a safety factor of one hundred may be necessary.

(d) For other situations, a factor of ten may be acceptable. If the employer can demonstrate through such calculations that employee exposure does not exceed the action level or the STEL, the employer may use this information as objective data to demonstrate compliance with the standard.

(9) **Sampling strategy**.

(a) Once the employer determines that there is a possibility of substantial employee exposure to formaldehyde, the employer is obligated to measure employee exposure.

(b) The next step is selection of a maximum risk employee. When there are different processes where employees may be exposed to formaldehyde, a maximum risk employee should be selected for each work operation.

(c) Selection of the maximum risk employee requires professional judgment. The best procedure for selecting the maximum risk employee is to observe employees and select the person closest to the source of formaldehyde. Employee mobility may affect this selection; e.g., if the closest employee is mobile in their tasks, they may not be the maximum risk employee. Air movement patterns and differences in work habits will also affect selection of the maximum risk employee.

(d) When many employees perform essentially the same task, a maximum risk employee cannot be selected. In this circumstance, it is necessary to resort to random sampling of the group of workers. The objective is to select a subgroup of adequate size so that there is a high probability that the random sample will contain at least one worker with high exposure of one exists.

The number of persons in the group influences the number that need to be sampled to ensure that at least one individual from the highest ten percent exposure group is contained in the sample. For example, to have ninety percent confidence in the results, if the group size is ten, nine should be sampled; for fifty, only eighteen need to be sampled.

(e) If measurement shows exposure to formaldehyde at or above the action level or the STEL, the employer needs to identify all other employees who may be exposed at or above the action level or STEL and measure or otherwise accurately characterize the exposure of these employees.

(f) Whether representative monitoring or random sampling are conducted, the purpose remains the same to determine if the exposure of any employee is above the action level. If the exposure of the most exposed employee is less than the action level and the STEL, regardless of how the employee is identified, then it is reasonable to assume that measurements of exposure of the other employees in that operation would be below the action level and the STEL.

(10) **Exposure measurements**.

(a) There is no "best" measurement strategy for all situations. Some elements to consider in developing a strategy are:

(i) Availability and cost of sampling equipment;

(ii) Availability and cost of analytic facilities;

(iii) Availability and cost of personnel to take samples;

(iv) Location of employees and work operations;

(v) Intraday and interday variations in the process;

(vi) Precision and accuracy of sampling and analytic methods; and

(vii) Number of samples needed.

(b) Samples taken for determining compliance with the STEL differ from those that measure the TWA concentration in important ways. STEL samples are best taken in a nonrandom fashion using all available knowledge relating to the area, the individual, and the process to obtain samples during periods of maximum expected concentrations. At least three measurements on a shift are generally needed to spot gross errors or mistakes; however, only the highest value represents the STEL.

(c) If an operation remains constant throughout the workshift, a much greater number of samples would need to be taken over the thirty-two discrete nonoverlapping periods in an 8-hour workshift to verify compliance with a STEL. If employee exposure is truly uniform throughout the workshift, however, an employer in compliance with the 1 ppm TWA would be in compliance with the 2 ppm STEL, and this determination can probably be made using objective data.

(11) **Need to repeat the monitoring strategy**.

(a) Interday and intraday fluctuations in employee exposure are mostly influenced by the physical processes that generate formaldehyde and the work habits of the employee. Hence, in-plant process variations influence the employer's determination of whether or not additional controls need to be imposed. Measurements that employee exposure is low on a day that is not representative of worst conditions may not provide sufficient information to determine whether or not additional engineering controls should be installed to achieve the PELs.

(b) The person responsible for conducting sampling must be aware of systematic changes which will negate the validity of the sampling results. Systematic changes in formaldehyde exposure concentration for an employee can occur due to:

(i) The employee changing patterns of movement in the workplace;

(ii) Closing of plant doors and windows;

(iii) Changes in ventilation from season to season;

(iv) Decreases in ventilation efficiency or abrupt failure of engineering control equipment; and

(v) Changes in the production process or work habits of the employee.

(c) Any of these changes, if they may result in additional exposure that reaches the next level of action (i.e., 0.5 or 1.0 ppm as an 8-hour average or 2 ppm over fifteen minutes) require the employer to perform additional monitoring to reassess employee exposure.

(d) A number of methods are suitable for measuring employee exposure to formaldehyde or for characterizing emissions within the worksite. The preamble to this standard describes some methods that have been widely used or subjected to validation testing. A detailed analytical procedure derived from the WISHA Method A.C.R.O. for acrolein and formaldehyde is presented below for informational purposes.

(e) Inclusion of WISHA's method in this appendix in no way implies that it is the only acceptable way to measure employee exposure to formaldehyde. Other methods that are free from significant interferences and that can determine formaldehyde at the permissible exposure limits within .±25 percent of the "true" value at the ninety-five percent confidence level are also acceptable. Where applicable, the method should also be capable of measuring formaldehyde at the action level to ±35 percent of the "true" value with a ninety-five percent confidence level. WISHA encourages employers to choose methods that will be best for their individual needs. The employer must exercise caution, however, in choosing an appropriate method since some techniques suffer from interferences that are likely to be present in workplaces of certain industry sectors where formaldehyde is used.

(12) **WISHA's analytical laboratory method**.

A.C.R.O. (also use methods F.O.R.M. and F.O.R.M. 2 when applicable).

(a) Matrix: Air.

(b) Target concentration: 1 ppm (1.2 mg/m^3).

(c) Procedures: Air samples are collected by drawing known volumes of air through sampling tubes containing XAD-2 adsorbent which have been coated with 2-(hydroxymethyl) piperidine. The samples are desorbed with toluene and then analyzed by gas chromatography using a nitrogen selective detector.

(d) Recommended sampling rate and air volumes: 0.1 L/min and 24 L.

(e) Reliable quantitation limit: 16 ppb (20 µg/m3).

(f) Standard error of estimate at the target concentration: 7.3%.

(g) Status of the method: A sampling and analytical method that has been subjected to the established evaluation procedures of the organic methods evaluation branch.

(h) Date: March, 1985.

(13) **General discussion**.

(a) Background: The current WISHA method for collecting acrolein vapor recommends the use of activated 13X molecular sieves. The samples must be stored in an ice bath during and after sampling and also they must be analyzed within forty-eight hours of collection. The current WISHA method for collecting formaldehyde vapor recommends the use of bubblers containing ten percent methanol in water as the trapping solution.

(b) This work was undertaken to resolve the sample stability problems associated with acrolein and also to eliminate the need to use bubblers to sample formaldehyde. A goal of this work was to develop and/or to evaluate a common sampling and analytical procedure for acrolein and formaldehyde.

(c) NIOSH has developed independent methodologies for acrolein and formaldehyde which recommend the use of reagent-coated adsorbent tubes to collect the aldehydes as stable derivatives. The formaldehyde sampling tubes contain Chromosorb 102 adsorbent coated with N-benzylethanolamine (BEA) which reacts with formaldehyde vapor to form a stable oxazolidine compound. The acrolein sampling tubes contain XAD-2 adsorbent coated with 2-(hydroxymethyl) piperidine (2-HMP) which reacts with acrolein vapor to form a different, stable oxazolidine derivative. Acrolein does not appear to react with BEA to give a suitable reaction product. Therefore, the formaldehyde procedure cannot provide a common method for both aldehydes. However, formaldehyde does react with 2-HMP to form a very suitable reaction product. It is the quantitative reaction of acrolein and formaldehyde with 2-HMP that provides the basis for this evaluation.

(d) This sampling and analytical procedure is very similar to the method recommended by NIOSH for acrolein. Some changes in the NIOSH methodology were necessary to permit the simultaneous determination of both aldehydes and also to accommodate WISHA laboratory equipment and analytical techniques.

(14) **Limit-defining parameters**: The analyte air concentrations reported in this method are based on the recommended air volume for each analyte collected separately and a desorption volume of 1 mL. The amounts are presented as acrolein and/or formaldehyde, even though the derivatives are the actual species analyzed.

(15) **Detection limits of the analytical procedure**: The detection limit of the analytical procedure was 386 pg per injection for formaldehyde. This was the amount of analyte which gave a peak whose height was about five times the height of the peak given by the residual formaldehyde derivative in a typical blank front section of the recommended sampling tube.

(16) **Detection limits of the overall procedure**: The detection limits of the overall procedure were 482 ng per sample (16 ppb or 20 $\mu g/m^3$ for formaldehyde). This was the amount of analyte spiked on the sampling device which allowed recoveries approximately equal to the detection limit of the analytical procedure.

(17) **Reliable quantitation limits**:

(a) The reliable quantitation limit was 482 ng per sample (16 ppb or 20 µg/m3) for formaldehyde. These were the smallest amounts of analyte which could be quantitated within the limits of a recovery of at least seventy-five percent and a precision (±1.96 SD) of ±25% or better.

(b) The reliable quantitation limit and detection limits reported in the method are based upon optimization of the instrument for the smallest possible amount of analyte. When the target concentration of an analyte is exceptionally higher than these limits, they may not be attainable at the routine operating parameters.

(18) **Sensitivity**: The sensitivity of the analytical procedure over concentration ranges representing 0.4 to 2 times the target concentration, based on the recommended air volumes, was seven thousand five hundred eighty-nine area units per µg/mL for formaldehyde. This value was determined from the slope of the calibration curve. The sensitivity may vary with the particular instrument used in the analysis.

(19) **Recovery**: The recovery of formaldehyde from samples used in an eighteen-day storage test remained above ninety-two percent when the samples were stored at ambient temperature. These values were determined from regression lines which were calculated from the storage data. The recovery of the analyte from the collection device must be at least seventy-five percent following storage.

(20) **Precision (analytical method only)**: The pooled coefficient of variation obtained from replicate determinations of analytical standards over the range of 0.4 to 2 times the target concentration was 0.0052 for formaldehyde ((d)(C)(iii) of this subsection).

(21) **Precision (overall procedure)**: The precision at the ninety-five percent confidence level for the ambient temperature storage tests was ±14.3% for formaldehyde. These values each include an additional ±5% for sampling error. The overall procedure must provide results at the target concentrations that are ±25% at the ninety-five percent confidence level.

(22) **Reproducibility**: Samples collected from controlled test atmospheres and a draft copy of this procedure were given to a chemist unassociated with this evaluation. The formaldehyde samples were analyzed following fifteen days storage. The average recovery was 96.3% and the standard deviation was 1.7%.

(23) **Advantages**:

(a) The sampling and analytical procedures permit the simultaneous determination of acrolein and formaldehyde.

(b) Samples are stable following storage at ambient temperature for at least eighteen days.

(24) **Disadvantages**: None.

(25) **Sampling procedure**.

(a) Apparatus:

(i) Samples are collected by use of a personal sampling pump that can be calibrated to within ±5% of the recommended 0.1 L/min sampling rate with the sampling tube in line.

(ii) Samples are collected with laboratory prepared sampling tubes. The sampling tube is constructed of silane treated glass and is about 8-cm long. The ID is 4 mm and the OD is 6 mm. One end of the tube is tapered so that a glass wool end plug will hold the contents of the tube in place during sampling. The other end of the sampling tube is open to its full 4-mm ID to facilitate packing of the tube. Both ends of the tube are fire-polished for safety. The tube is packed with a 75-mg backup section, located nearest the tapered end and a 150-mg sampling section of pretreated XAD-2 adsorbent which has been coated with 2-HMP. The two sections of coated adsorbent are separated and retained with small plugs of silanized glass wool. Following packing, the sampling tubes are sealed with two 7/32 inch OD plastic and caps. Instructions for the pretreatment and the coating of XAD-2 adsorbent are presented in (d) of this subsection.

(b) Sampling tubes, similar to those recommended in this method, are marketed by Supelco, Inc. These tubes were not available when this work was initiated; therefore, they were not evaluated.

(26) **Reagents**: None required.

(27) **Technique**:

(a) Properly label the sampling tube before sampling and then remove the plastic end caps.

(b) Attach the sampling tube to the pump using a section of flexible plastic tubing such that the large, front section of the sampling tube is exposed directly to the atmosphere. Do not place any tubing ahead of the sampling tube. The sampling tube should be attached in the worker's breathing zone in a vertical manner such that it does not impede work performance.

(c) After sampling for the appropriate time, remove the sampling tube from the pump and then seal the tube with plastic end caps.

(d) Include at least one blank for each sampling set. The blank should be handled in the same manner as the samples with the exception that air is not drawn through it.

(e) List any potential interferences on the sample data sheet.

(28) **Breakthrough**:

(a) Breakthrough was defined as the relative amount of analyte found on a backup sample in relation to the total amount of analyte collected on the sampling train.

(b) For formaldehyde collected from test atmospheres containing six times the PEL, the average five percent breakthrough air volume was 41 L. The sampling rate was 0.1 L/min and the average mass of formaldehyde collected was 250 µg.

(29) **Desorption efficiency**: No desorption efficiency corrections are necessary to compute air sample results because analytical standards are prepared using coated adsorbent. Desorption efficiencies were determined, however, to investigate the recoveries of the analytes from the sampling device. The average recovery over the range of 0.4 to 2 times the target concentration, based on the recommended air volumes, was 96.2% for formaldehyde. Desorption efficiencies were essentially constant over the ranges studied.

(30) **Recommended air volume and sampling rate**:

(a) The recommended air volume for formaldehyde is 24 L.

(b) The recommended sampling rate is 0.1 L/min.

(31) **Interferences**:

(a) Any collected substance that is capable of reacting with 2-HMP and thereby depleting the derivatizing agent is a potential interference. Chemicals which contain a carbonyl group, such as acetone, may be capable of reacting with 2-HMP.

(b) There are no other known interferences to the sampling method.

(32) **Safety precautions**:

(a) Attach the sampling equipment to the worker in such a manner that it will not interfere with work performance or safety.

(b) Follow all safety practices that apply to the work area being sampled.

(33) **Analytical procedure**.

(a) Apparatus:

(i) A gas chromatograph (GC), equipped with a nitrogen selective detector. A Hewlett-Packard model 5840A GC fitted with a nitrogen phosphorus flame ionization detector (NPD) was used for this evaluation. Injections were performed using a Hewlett-Packard model 7671A automatic sampler.

(ii) A GC column capable of resolving the analytes from any interference. A 6 ft x 1/4 in OD (2mm ID) glass GC column containing 10% UCON 50-HB-5100 + 2% KOH on 80/100 mesh Chromosorb W-AW was used for the evaluation. Injections were performed on-column.

(iii) Vials, glass 2-mL with Teflon-lined caps.

(iv) Volumetric flasks, pipets, and syringes for preparing standards, making dilutions, and performing injections.

(b) Reagents:

(i) Toluene and dimethylformamide. Burdick and Jackson solvents were used in this evaluation.

(ii) Helium, hydrogen, and air, GC grade.

(iii) Formaldehyde, thirty-seven percent by weight, in water. Aldrich Chemical, ACS Reagent Grade formaldehyde was used in this evaluation.

(iv) Amberlite XAD-2 adsorbent coated with 2-(hydroxymethyl) piperidine (2-HMP), 10% by weight ((d) of this subsection).

(v) Desorbing solution with internal standard. This solution was prepared by adding 20 µL of dimethylformamide to 100 mL of toluene.

(c) Standard preparation:

(i) Formaldehyde: Prepare stock standards by diluting known volumes of thirty-seven percent formaldehyde solution with methanol. A procedure to determine the formaldehyde content of these standards is presented in (d) of this subsection. A standard containing 7.7 mg/mL formaldehyde was prepared by diluting 1 mL of the thirty-seven percent reagent to 50 mL with methanol.

(ii) It is recommended that analytical standards be prepared about sixteen hours before the air samples are to be analyzed in order to ensure the complete reaction of the analytes with 2-HMP. However, rate studies have shown the reaction to be greater than ninety-five percent complete after four hours. Therefore, one or two standards can be analyzed after this reduced time if sample results are outside the concentration range of the prepared standards.

(iii) Place 150-mg portions of coated XAD-2 adsorbent, from the same lot number as used to collect the air samples, into each of several glass 2-mL vials. Seal each vial with a Teflon-lined cap.

(iv) Prepare fresh analytical standards each day by injecting appropriate amounts of the diluted analyte directly onto 150-mg portions of coated adsorbent. It is permissible to inject both acrolein and formaldehyde on the same adsorbent portion. Allow the standards to stand at room temperature. A standard, approximately the target levels, was prepared by injecting 11 µL of the acrolein and 12 µL of the formaldehyde stock standards onto a single coated XAD-2 adsorbent portion.

(v) Prepare a sufficient number of standards to generate the calibration curves. Analytical standard concentrations should bracket sample concentrations. Thus, if samples are not in the concentration range of the prepared standards, additional standards must be prepared to determine detector response.

(vi) Desorb the standards in the same manner as the samples following the sixteen-hour reaction time.

(d) Sample preparation:

(i) Transfer the 150-mg section of the sampling tube to a 2-mL vial. Place the 75-mg section in a separate vial. If the glass wool plugs contain a significant number of adsorbent beads, place them with the appropriate sampling tube section. Discard the glass wool plugs if they do not contain a significant number of adsorbent beads.

(ii) Add 1 mL of desorbing solution to each vial.

(iii) Seal the vials with Teflon-lined caps and then allow them to desorb for one hour. Shake the vials by hand with vigorous force several times during the desorption time.

(iv) Save the used sampling tubes to be cleaned and recycled.

(e) Analysis:

(f) GC conditions.

(34) **Column temperature**:

(a) Bi-level temperature program.

(i) First level: 100°C to 140C at 4°C/min following completion of the first level.

(ii) Second level: 140°C to 180°C at 20°C/min following completion of the first level.

(b) Isothermal period: Hold column at 180°C until the recorder pen returns to baseline (usually about twenty-five minutes after injection).

(c) Injector temperature: 180°C.

(d) Helium flow rate: 30 mL/min (detector response will be reduced if nitrogen is substituted for helium carrier gas).

(e) Injection volume: 51 0.8 µL.

(f) GC column: Six-ft x 1/4-in OD (2 mm ID) glass GC column containing 10% UCON 50-HB-5100NZG651+512% KOH on 80/100 Chromosorb W-AW.

(g) NPD conditions:

(i) Hydrogen flow rate: 3 mL/min.

(ii) Air flow rate: 50 mL/min.

(h) Detector temperature: 275 5151C.

(i) Use a suitable method, such as electronic integration, to measure detector response.

(ii) Use an internal standard method to prepare the calibration curve with several standard solutions of different concentrations. Prepare the calibration curve daily. Program the integrator to report results in µg/mL.

(iii) Bracket sample concentrations with standards.

(iv) Interferences (analytical).

(A) Any compound with the same general retention time as the analytes and which also gives a detector response is a potential interference. Possible interferences should be reported to the laboratory with submitted samples by the industrial hygienist.

(B) GC parameters (temperature, column, etc.), may be changed to circumvent interferences.

(C) A useful means of structure designation is GC/MS. It is recommended this procedure be used to confirm samples whenever possible.

(D) The coated adsorbent usually contains a very small amount of residual formaldehyde derivative.

(i) Calculations:

(i) Results are obtained by use of calibration curves. Calibration curves are prepared by plotting detector response against concentration for each standard. The best line through the data points is determined by curve fitting.

(ii) The concentration, in µg/mL, for a particular sample is determined by comparing its detector response to the calibration curve. If either of the analytes is found on the backup section, it is added to the amount found on the front section. Blank corrections should be performed before adding the results together.

(iii) The acrolein and/or formaldehyde air concentration can be expressed using the following equation:

$Mg/m^3=(A)(B)/C$.

where A = µg/mL from 3.7.2, B = desorption volume, and C = L of air sampled.

No desorption efficiency corrections are required.

(iv) The following equation can be used to convert results in mg/m51351 to ppm.

$ppm = (mg/m^3)(24.45)/MW$

where mg/m^3 = result from 3.7.3, 24.45 = molar volume of an ideal gas at 760 mm Hg and 25 5151C, MW = molecular weight (Formaldehyde = 30.0).

(j) Backup data. Backup data on detection limits, reliable quantitation limits, sensitivity and precision of the analytical method, breakthrough, desorption efficiency, storage, reproducibility, and generation of test atmospheres are available in OSHA Method 52, developed by the Organics Methods Evaluation Branch, OSHA Analytical Laboratory, Salt Lake City, Utah.

(k) Procedure to coat XAD-2 adsorbent with 2-HMP:

(i) Apparatus: Soxhlet extraction apparatus, rotary evaporation apparatus, vacuum dessicator, 1-L vacuum flask, 1-L round-bottomed evaporative flask, 1-L Erlenmeyer flask, 250-mL Buchner funnel with a coarse fritted disc, etc.

(ii) Reagents:

(A) Methanol, isooctane, and toluene.

(B) (Hydroxymethyl) piperidine.

(C) Amberlite XAD-2 nonionic polymeric adsorbent, twenty to sixty mesh, Aldrich Chemical XAD-2 was used in this evaluation.

(l) Procedure: Weigh 125 g of crude XAD-2 adsorbent into a 1-L Erlenmeyer flask. Add about 200 mL of water to the flask and then swirl the mixture to wash the adsorbent. Discard any adsorbent that floats to the top of the water and then filter the mixture using a fritted Buchner funnel. Air dry the adsorbent for two minutes. Transfer the adsorbent back to the Erlenmeyer flask and then add about 200 mL of methanol to the flask. Swirl and then filter the mixture as before. Transfer the washed adsorbent back to the Erlenmeyer flask and then add about 200 mL of methanol to the flask. Swirl and then filter the mixture as before. Transfer the washed adsorbent to a 1-L round-bottomed evaporative flask, add 13 g of 2-HMP and then 200 mL of methanol, swirl the mixture and then allow it to stand for one hour. Remove the methanol at about 40°C and reduced pressure using a rotary evaporation apparatus. Transfer the coated adsorbent to a suitable container and store it in a vacuum desiccator at room temperature overnight. Transfer the coated adsorbent to a Soxhlet extractor and then extract the material with toluene for about twenty-four hours. Discard the contaminated toluene, add methanol in its place and then continue the Soxhlet extraction for an additional four hours. Transfer the adsorbent to a weighted 1-L round-bottom evaporative flask and remove the methanol using the rotary evaporation apparatus. Determine the weight of the adsorbent and then add an amount of 2-HMP, which is ten percent by weight of the adsorbent. Add 200 mL of methanol and then swirl the mixture. Allow the mixture to stand for one hour. Remove the methanol by rotary evaporation. Transfer the coated adsorbent to a suitable container and store it in a vacuum dessicator until all traces of solvents are gone. Typically, this will take two to three days. The coated adsorbent should be protected from contamination. XAD-2 adsorbent treated in this manner will probably not contain residual acrolein derivative. However, this adsorbent will often contain residual formaldehyde derivative levels of about 0.1 μg per 150 mg of adsorbent. If the blank values for a batch of coated adsorbent are too high, then the batch should be returned to the Soxhlet extractor, extracted with toluene again and then recoated. This process can be repeated until the desired blank levels are attained. The coated adsorbent is now ready to be packed into sampling tubes. The sampling tubes should be stored in a sealed container to prevent contamination. Sampling tubes should be stored in the dark at room temperature. The sampling tubes should be segregated by coated adsorbent lot number. A sufficient amount of each lot number of coated adsorbent should be retained to prepare analytical standards for use with air samples from that lot number.

(m) A procedure to determine formaldehyde by acid titration:

(i) Standardize the 0.1 N HC1 solution using sodium carbonate and methyl orange indicator.

(ii) Place 50 mL of 0.1 M sodium sulfite and three drops of thymophthalein indicator into a 250-mL Erlenmeyer flask. Titrate the contents of the flask to a colorless endpoint with 0.1 N HC1 (usually one or two drops is sufficient). Transfer 10 mL of the formaldehyde/methanol solution ((b)(iii)(A) of this subsection) into the same flask and titrate the mixture with 0.1 N HC1, again, to a colorless endpoint. The formaldehyde concentration of the standard may be calculated by the following equation:

$$\text{Formaldehyde, mg/mL} = \frac{\text{acid titer x acid normality x 30.0}}{\text{mL of Sample}}$$

(iii) This method is based on the quantitative liberation of sodium hydroxide when formaldehyde reacts with sodium sulfite to form the formaldehyde-bisulfite addition product. The volume of sample may be varied depending on the formaldehyde content but the solution to be titrated must contain excess sodium sulfite. Formaldehyde solutions containing substantial amounts of acid or base must be neutralized before analysis.

WAC 296-62-07546 Appendix C medical surveillance--Formaldehyde.

(1) **Health hazards**. The occupational health hazards of formaldehyde are primarily due to its toxic effects after inhalation, after direct contact with the skin or eyes by formaldehyde in liquid or vapor form, and after ingestion.

(2) **Toxicology**.

(a) Acute effects of exposure.

(i) Inhalation (breathing): Formaldehyde is highly irritating to the upper airways. The concentration of formaldehyde that is immediately dangerous to life and health is 100 ppm. Concentrations above 50 ppm can cause severe pulmonary reactions within minutes. These include pulmonary edema, pneumonia, and bronchial irritation which can result in death. Concentrations above 5 ppm readily cause lower airway irritation characterized by cough, chest tightness, and wheezing. There is some controversy regarding whether formaldehyde gas is a pulmonary sensitizer which can cause occupational asthma in a previously normal individual. Formaldehyde can produce symptoms of bronchial asthma in humans. The mechanism may be either sensitization of the individual by exposure to formaldehyde or direct irritation by formaldehyde in persons with preexisting asthma.

Upper airway irritation is the most common respiratory effect reported by workers and can occur over a wide range of concentrations, most frequently above 1 ppm. However, airway irritation has occurred in some workers with exposures to formaldehyde as low as 0.1 ppm. Symptoms of upper airway irritation include dry or sore throat, itching and burning sensations of the nose, and nasal congestion. Tolerance to this level of exposure may develop within one to two hours. This tolerance can permit workers remaining in an environment of gradually increasing formaldehyde concentrations to be unaware of their increasingly hazardous exposure.

(ii) Eye contact: Concentrations of formaldehyde between 0.05 ppm and 0.5 ppm produce a sensation of irritation in the eyes with burning, itching, redness, and tearing. Increased rate of blinking and eye closure generally protects the eye from damage at these low levels, but these protective mechanisms may interfere with some workers' work abilities. Tolerance can occur in workers continuously exposed to concentrations of formaldehyde in this range. Accidental splash injuries of human eyes to aqueous solutions of formaldehyde (formalin) have resulted in a wide range of ocular injuries including corneal opacities and blindness. The severity of the reactions have been directly dependent on the concentration of formaldehyde in solution and the amount of time lapsed before emergency and medical intervention.

(iii) Skin contact: Exposure to formaldehyde solutions can cause irritation of the skin and allergic contact dermatitis. These skin diseases and disorders can occur at levels well below those encountered by many formaldehyde workers. Symptoms include erythema, edema, and vesiculation or hives. Exposure to liquid formalin or formaldehyde vapor can provoke skin reactions in sensitized individuals even when airborne concentrations of formaldehyde are well below 1 ppm.

(iv) Ingestion: Ingestion of as little as 30 ml of a thirty-seven percent solution of formaldehyde (formalin) can result in death. Gastrointestinal toxicity after ingestion is most severe in the stomach and results in symptoms which can include nausea, vomiting, and severe abdominal pain. Diverse damage to other organ systems including the liver, kidney, spleen, pancreas, brain, and central nervous systems can occur from the acute response to ingestion of formaldehyde.

(b) Chronic effects of exposure. Long-term exposure to formaldehyde has been shown to be associated with an increased risk of cancer of the nose and accessory sinuses, nasopharyngeal and oropharyngeal cancer, and lung cancer in humans. Animal experiments provide conclusive evidence of a causal relationship between nasal cancer in rats and formaldehyde exposure. Concordant evidence of carcinogenicity includes DNA binding, genotoxicity in short-term tests, and cytotoxic changes in the cells of the target organ suggesting both preneoplastic changes and a dose-rate effect. Formaldehyde is a complete carcinogen and appears to exert an effect on at least two stages of the carcinogenic process.

(3) **Surveillance considerations**.

(a) History.

(i) Medical and occupational history: Along with its acute irritative effects, formaldehyde can cause allergic sensitization and cancer. One of the goals of the work history should be to elicit information on any prior or additional exposure to formaldehyde in either the occupational or the nonoccupational setting.

(ii) Respiratory history: As noted above, formaldehyde has recognized properties as an airway irritant and has been reported by some authors as a cause of occupational asthma. In addition, formaldehyde has been associated with cancer of the entire respiratory system of humans. For these reasons, it is appropriate to include a comprehensive review of the respiratory system in the medical history. Components of this history might include questions regarding dyspnea on exertion, shortness of breath, chronic airway complaints, hyperreactive airway disease, rhinitis, bronchitis, bronchiolitis, asthma, emphysema, respiratory allergic reaction, or other preexisting pulmonary disease.

In addition, generalized airway hypersensitivity can result from exposures to a single sensitizing agent. The examiner should, therefore, elicit any prior history of exposure to pulmonary irritants, and any short-term or long-term effects of that exposure.

Smoking is known to decrease mucociliary clearance of materials deposited during respiration in the nose and upper airways. This may increase a worker's exposure to inhaled materials such as formaldehyde vapor. In addition, smoking is a potential confounding factor in the investigation of any chronic respiratory disease, including cancer. For these reasons, a complete smoking history should be obtained.

(iii) Skin disorders: Because of the dermal irritant and sensitizing effects of formaldehyde, a history of skin disorders should be obtained. Such a history might include the existence of skin irritation, previously documented skin sensitivity, and other dermatologic disorders. Previous exposure to formaldehyde and other dermal sensitizers should be recorded.

(iv) History of atopic or allergic diseases: Since formaldehyde can cause allergic sensitization of the skin and airways, it might be useful to identify individuals with prior allergen sensitization. A history of atopic disease and allergies to formaldehyde or any other substances should also be obtained. It is not definitely known at this time whether atopic diseases and allergies to formaldehyde or any other substances should also be obtained. Also it is not definitely known at this time whether atopic individuals have a greater propensity to develop formaldehyde sensitivity than the general population, but identification of these individuals may be useful for ongoing surveillance.

(v) Use of disease questionnaires: Comparison of the results from previous years with present results provides the best method for detecting a general deterioration in health when toxic signs and symptoms are measured subjectively. In this way recall bias does not affect the results of the analysis. Consequently, WISHA has determined that the findings of the medical and work histories should be kept in a standardized form for comparison of the year-to-year results.

(b) Physical examination.

(i) Mucosa of eyes and airways: Because of the irritant effects of formaldehyde, the examining physician should be alert to evidence of this irritation. A speculum examination of the nasal mucosa may be helpful in assessing possible irritation and cytotoxic changes, as may be indirect inspection of the posterior pharynx by mirror.

(ii) Pulmonary system: A conventional respiratory examination, including inspection of the thorax and auscultation and percussion of the lung fields should be performed as part of the periodic medical examination. Although routine pulmonary function testing is only required by the standard once every year for persons who are exposed over the TWA concentration limit, these tests have an obvious value in investigating possible respiratory dysfunction and should be used wherever deemed appropriate by the physician. In cases of alleged formaldehyde-induced airway disease, other possible causes of pulmonary dysfunction (including exposures to other substances) should be ruled out. A chest radiograph may be useful in these circumstances. In cases of suspected airway hypersensitivity or allergy, it may be appropriate to use bronchial challenge testing with formaldehyde or methacholine to determine the nature of the disorder. Such testing should be performed by or under the supervision of a physician experienced in the procedures involved.

(iii) Skin: The physician should be alert to evidence of dermal irritation of sensitization, including reddening and inflammation, urticaria, blistering, scaling, formation of skin fissures, or other symptoms. Since the integrity of the skin barrier is compromised by other dermal diseases, the presence of such disease should be noted. Skin sensitivity testing carries with it some risk of inducing sensitivity, and therefore, skin testing for formaldehyde sensitivity should not be used as a routine screening test. Sensitivity testing may be indicated in the investigation of a suspected existing sensitivity. Guidelines for such testing have been prepared by the North American Contact Dermatitis Group.

(4) **Additional examinations or tests**. The physician may deem it necessary to perform other medical examinations or tests as indicated. The standard provides a mechanism whereby these additional investigations are covered under the standard for occupational exposure to formaldehyde.

(5) **Emergencies**. The examination of workers exposed in an emergency should be directed at the organ systems most likely to be affected. Much of the content of the examination will be similar to the periodic examination unless the patient has received a severe acute exposure requiring immediate attention to prevent serious consequences. If a severe overexposure requiring medical intervention or hospitalization has occurred, the physician must be alert to the possibility of delayed symptoms. Follow-up nonroutine examinations may be necessary to ensure the patient's well-being.

(6) **Employer obligations**. The employer is required to provide the physician with the following information: A copy of this standard and appendices A, C, D, and E; a description of the affected employee's duties as they relate to their exposure concentration; an estimate of the employee's exposure including duration (e.g., fifteen hr./wk., three eight-hour shifts, full-time); a description of any personal protective equipment, including respirators, used by the employee; and the results of any previous medical determinations for the affected employee related to formaldehyde exposure to the extent that this information is within the employer's control.

(7) **Physician's obligations**. The standard requires the employer to obtain a written statement from the physician. This statement must contain the physician's opinion as to whether the employee has any medical condition which would place them at increased risk of impaired health from exposure to formaldehyde or use of respirators, as appropriate. The physician must also state his opinion regarding any restrictions that should be placed on the employee's exposure to formaldehyde or upon the use of protective clothing or equipment such as respirators. If the employee wears a respirator as a result of their exposure to formaldehyde, the physician's opinion must also contain a statement regarding the suitability of the employee to wear the type of respirator assigned. Finally, the physician must inform the employer that the employee has been told the results of the medical examination and of any medical conditions which require further explanation or treatment. This written opinion is not to contain any information on specific findings or diagnoses unrelated to occupational exposure to formaldehyde.

The purpose in requiring the examining physician to supply the employer with a written opinion is to provide the employer with a medical basis to assist the employer in placing employees initially, in ensuring that their health is not being impaired by formaldehyde, and to assess the employee's ability to use any required protective equipment.

WAC 296-62-07548 Appendix D--Nonmandatory medical disease questionnaire.

(1) **Identification**.

(a) Plant name:

(b) Date:

(c) Employee name:

(d) Social Security number:

(e) Job title:

(f) Birthdate:

(g) Age:

(h) Sex:

(i) Height:

(j) Weight:

(2) **Medical history**.

(a) Have you ever been in the hospital as a patient? Yes No

If yes, what kind of problem were you having?

(b) Have you ever had any kind of operation? Yes No

If yes, what kind?

(c) Do you take any kind of medicine regularly? Yes No

If yes, what kind?

(d) Are you allergic to any drugs, foods, or chemicals? Yes No

If yes, what kind of allergy is it?

What causes the allergy?

(e) Have you ever been told that you have asthma, hayfever, or sinusitis? Yes No

(f) Have you ever been told that you have emphysema, bronchitis, or any other respiratory problems? Yes No

(g) Have you ever been told you had hepatitis? Yes No

(h) Have you ever been told that you have cirrhosis? Yes No

(i) Have you ever been told that you had cancer? Yes No

(j) Have you ever had arthritis or joint pain? Yes No

(k) Have you ever been told that you had high blood pressure? Yes No

(l) Have you ever had a heart attack or heart trouble? Yes No

(3) **Medical history update**.

(a) Have you been in the hospital as a patient any time within the past year? Yes No

If so, for what condition?

(b) Have you been under the care of a physician during the past year? Yes No

If so, for what condition?

(c) Is there any change in your breathing since last year? Yes No

(i) Better?

(ii) Worse?

(iii) No change?

If change, do you know why?

(d) Is your general health different this year from last year? Yes No

If different, in what way?

(e) Have you in the past year or are you now taking any medication on a regular basis?

Yes No

(i) Name Rx

(ii) Condition being treated

(4) **Occupational history**.

(a) How long have you worked for your present employer?

(b) What jobs have you held with this employer? Include job title and length of time in each job.

(c) In each of these jobs, how many hours a day were you exposed to chemicals?

(d) What chemicals have you worked with most of the time?

(e) Have you ever noticed any type of skin rash you feel was related to your work?

Yes No

(f) Have you ever noticed that any kind of chemical makes you cough? Yes No

(i) Wheeze: Yes No

(ii) Become short of breath or cause your chest to become tight? Yes No

(g) Are you exposed to any dust or chemicals at home? Yes No

If yes, explain:

(h) In other jobs, have you ever had exposure to:

(i) Wood dust? Yes No

(ii) Nickel or chromium? Yes No

(iii) Silica (foundry, sand blasting)? Yes No

(iv) Arsenic or asbestos? Yes No

(v) Organic solvents? Yes No

(vi) Urethane foams? Yes No

(5) **Occupational history update**.

(a) Are you working on the same job this year as you were last year? Yes No

If not, how has your job changed?

(b) What chemicals are you exposed to on your job?

(c) How many hours a day are you exposed to chemicals?

(d) Have you noticed any skin rash within the past year you feel was related to your work? Yes No

If so, explain circumstances:

(e) Have you noticed that any chemical makes you cough, be short of breath, or wheeze?

Yes No

If so, can you identify it?

(6) **Miscellaneous**.

(a) Do you smoke? Yes No

If so, how much and for how long?

(i) Pipe Cigars (ii) (iii) Cigarettes

(b) Do you drink alcohol in any form? Yes No

If so, how much, how long, and how often?

(c) Do you wear glasses or contact lenses? Yes No

(d) Do you get any physical exercise other than that required to do your job?

Yes No

If so, explain:

(e) Do you have any hobbies or "side jobs" that require you to use chemicals, such as furniture stripping, sand blasting, insulation or manufacture of urethane foam, furniture, etc.? Yes No

If so, please describe, giving type of business or hobby, chemicals used and length of exposures.

(7) **Symptoms questionnaire**.

(a) Do you ever have any shortness of breath? Yes No

(i) If yes, do you have to rest after climbing several flights of stairs? Yes No

(ii) If yes, if you walk on the level with people your own age, do you walk slower than they do? Yes No

(iii) If yes, if you walk slower than a normal pace, do you have to limit the distance that you walk? Yes No

(iv) If yes, do you have to stop and rest while bathing or dressing? Yes No

(b) Do you cough as much as three months out of the year? Yes No

(i) If yes, have you had this cough for more than two years? Yes No

(ii) If yes, do you ever cough anything up from the chest? Yes No

(c) Do you ever have a feeling of smothering, unable to take a deep breath, or tightness in your chest? Yes No

(i) If yes, do you notice that this occurs on any particular day of the week? Yes No

(ii) If yes, what day of the week?

(iii) If yes, do you notice that this occurs at any particular place? Yes No

(iv) If yes, do you notice that this is worse after you have returned to work after being off for several days? Yes No

(d) Have you ever noticed any wheezing in your chest? Yes No

(i) If yes, is this only with colds or other infections? Yes No

(ii) Is this caused by exposure to any kind of dust or other material?

Yes No

(iii) If yes, what kind?

(e) Have you noticed any burning, tearing, or redness of your eyes when you are at work? Yes No

If so, explain circumstances:

(f) Have you noticed any sore or burning throat or itchy or burning nose when you are at work? Yes No

If so, explain circumstances:

(g) Have you noticed any stuffiness or dryness of your nose? Yes No

(h) Do you ever have swelling of the eyelids or face? Yes No

(i) Have you ever been jaundiced? Yes No

If yes, was this accompanied by any pain? Yes No

(j) Have you ever had a tendency to bruise easily or bleed excessively? Yes No

(k) Do you have frequent headaches that are not relieved by aspirin or Tylenol?

Yes No

(i) If yes, do they occur at any particular time of the day or week? Yes No

(ii) If yes, when do they occur?

(l) Do you have frequent episodes of nervousness or irritability? Yes No

(m) Do you tend to have trouble concentrating or remembering? Yes No

(n) Do you ever feel dizzy, light-headed, excessively drowsy, or like you have been drugged? Yes No

(o) Does your vision ever become blurred? Yes No

(p) Do you have numbness or tingling of the hands or feet or other parts of your body?

Yes No

(q) Have you ever had chronic weakness or fatigue? Yes No

(r) Have you ever had any swelling of your feet or ankles to the point where you could not wear your shoes? Yes No

(s) Are you bothered by heartburn or indigestion? Yes No

(t) Do you ever have itching, dryness, or peeling and scaling of the hands?

Yes No

(u) Do you ever have a burning sensation in the hands, or reddening of the skin?

Yes No

(v) Do you ever have cracking or bleeding of the skin on your hands? Yes No

(w) Are you under a physician's care? Yes No

If yes, for what are you being treated?

(x) Do you have any physical complaints today? Yes No

If yes, explain:

(y) Do you have other health conditions not covered by these questions? Yes No

If yes, explain:

WAC 296-62-076 Methylenedianiline.

WAC 296-62-07601 Scope and application.

(1) WAC 296-62-076 applies to all occupational exposures to MDA, Chemical Abstracts Service Registry No. 101-77-9, except as provided in subsections (2) through (7) of this section.

(2) Except as provided in subsection (8) of this section and WAC 296-62-07609(5), this section does not apply to the processing, use, and handling of products containing MDA where initial monitoring indicates that the product is not capable of releasing MDA in excess of the action level under the expected conditions of processing, use, and handling which will cause the greatest possible release; and where no "dermal exposure to MDA" can occur.

(3) Except as provided in subsection (8) of this section, WAC 296-62-076 does not apply to the processing, use, and handling of products containing MDA where objective data are reasonably relied upon which demonstrate the product is not capable of releasing MDA under the expected conditions of processing, use, and handling which will cause the greatest possible release; and where no "dermal exposure to MDA" can occur.

(4) WAC 296-62-076 does not apply to the storage, transportation, distribution, or sale of MDA in intact containers sealed in such a manner as to contain the MDA dusts, vapors, or liquids, except for the provisions of WAC 296-62-07607 and 296-901-140.

(5) WAC 296-62-076 does not apply to the construction industry as defined in WAC 296-155-012. (Exposure to MDA in the construction industry is covered by WAC 296-155-173.)

(6) Except as provided in subsection (8) of this section, WAC 296-62-076 does not apply to materials in any form which contain less than 0.1% MDA by weight or volume.

(7) Except as provided in subsection (8) of this section, WAC 296-62-076 does not apply to "finished articles containing MDA."

(8) Where products containing MDA are exempted under subsections (2) through (7) of this section, the employer must maintain records of the initial monitoring results or objective data supporting that exemption and the basis for the employer's reliance on the data, as provided in the recordkeeping provision of WAC 296-62-07631.

WAC 296-62-07603 Definitions.

For the purpose of WAC 296-62-076, the following definitions shall apply:

Action level. A concentration of airborne MDA of 5 ppb as an 8-hour time-weighted average.

Authorized person. Any person specifically authorized by the employer whose duties require the person to enter a regulated area, or any person entering such an area as a designated representative of employees, for the purpose of exercising the right to observe monitoring and measuring procedures under WAC 296-62-07633 of WAC 296-62-076, or any other person authorized by WISHA or regulations issued by WISHA.

Container. Any barrel, bottle, can, cylinder, drum, reaction vessel, storage tank, commercial packaging, or the like, but does not include piping systems.

Dermal exposure to MDA. Occurs where employees are engaged in the handling, application, or use of mixtures or materials containing MDA, with any of the following nonairborne forms of MDA:

(a) Liquid, powdered, granular, or flaked mixtures containing MDA in concentrations greater than 0.1% by weight or volume; and

(b) Materials other than "finished articles" containing MDA in concentrations greater than 0.1% by weight or volume.

Director. The director of the department of labor and industries, or their designated representative.

Emergency. Any occurrence such as, but not limited to, equipment failure, rupture of containers, or failure of control equipment which results in an unexpected and potentially hazardous release of MDA.

Employee exposure. Exposure to MDA which would occur if the employee were not using respirators or protective work clothing and equipment.

Finished article containing MDA. Defined as a manufactured item:

(a) Which is formed to a specific shape or design during manufacture;

(b) Which has end use function(s) dependent in whole or part upon its shape or design during end use; and

(c) Where applicable, is an item which is fully cured by virtue of having been subjected to the conditions (temperature, time) necessary to complete the desired chemical reaction.

4,4' methylenedianiline or MDA. The chemical 4,4'- diaminodiphenylmethane, Chemical Abstract Service Registry number 101-77-9, in the form of a vapor, liquid, or solid. The definition also includes the salts of MDA.

Regulated areas. Areas where airborne concentrations of MDA exceed or can reasonably be expected to exceed, the permissible exposure limits, or where dermal exposure to MDA can occur.

STEL. Short-term exposure limit as determined by any 15 minute sample period.

WAC 296-62-07605 Permissible exposure limits (PEL).

The employer must ensure that no employee is exposed to an airborne concentration of MDA in excess of ten parts per billion (10 ppb) as an 8-hour time-weighted average or a STEL of 100 ppb.

WAC 296-62-07607 Emergency situations.

(1) **Written plan**.

(a) A written plan for emergency situations must be developed for each workplace where there is a possibility of an emergency. Appropriate portions of the plan must be implemented in the event of an emergency.

(b) The plan must specifically provide that employees engaged in correcting emergency conditions must be equipped with the appropriate personal protective equipment and clothing as required in WAC 296-62-07615 and 296-62-07617 until the emergency is abated.

(c) The plan must specifically include provisions for alerting and evacuating affected employees as well as the elements prescribed in chapter 296-24 WAC, Part G-1, "Employee emergency plans and fire prevention plans."

(2) **Alerting employees**. Where there is the possibility of employee exposure to MDA due to an emergency, means must be developed to alert promptly those employees who have the potential to be directly exposed. Affected employees not engaged in correcting emergency conditions shall be evacuated immediately in the event that an emergency occurs. Means must also be developed and implemented for alerting other employees who may be exposed as a result of the emergency.

WAC 296-62-07609 Exposure monitoring.

(1) **General**.

(a) Determinations of employee exposure must be made from breathing zone air samples that are representative of each employee's exposure to airborne MDA over an 8-hour period. Determination of employee exposure to the STEL must be made from breathing zone air samples collected over a 15 minute sampling period.

(b) Representative employee exposure must be determined on the basis of one or more samples representing full shift exposure for each shift for each job classification in each work area where exposure to MDA may occur.

(c) Where the employer can document that exposure levels are equivalent for similar operations in different work shifts, the employer shall only be required to determine representative employee exposure for that operation during one shift.

(2) **Initial monitoring**. Each employer who has a workplace or work operation covered by this standard must perform initial monitoring to determine accurately the airborne concentrations of MDA to which employees may be exposed.

(3) **Periodic monitoring and monitoring frequency**.

(a) If the monitoring required by subsection (2) of this section reveals employee exposure at or above the action level, but at or below the PELs, the employer must repeat such representative monitoring for each such employee at least every six months.

(b) If the monitoring required by subsection (2) of this section reveals employee exposure above the PELs, the employer must repeat such monitoring for each such employee at least every three months.

(c) The employer may alter the monitoring schedule from every three months to every six months for any employee for whom two consecutive measurements taken at least 7 days apart indicate that the employee exposure has decreased to below the TWA but above the action level.

(4) **Termination of monitoring**.

(a) If the initial monitoring required by subsection (2) of this section reveals employee exposure to be below the action level, the employer may discontinue the monitoring for that employee, except as otherwise required by subsection (5) of this section.

(b) If the periodic monitoring required by subsection (3) of this section reveals that employee exposures, as indicated by at least two consecutive measurements taken at least 7 days apart, are below the action level the employer may discontinue the monitoring for that employee, except as otherwise required by subsection (5) of this section.

(5) **Additional monitoring**. The employer must institute the exposure monitoring required under subsections (2) and (3) of this section when there has been a change in production process, chemicals present, control equipment, personnel, or work practices which may result in new or additional exposures to MDA, or when the employer has any reason to suspect a change which may result in new or additional exposures.

(6) **Accuracy of monitoring**. Monitoring must be accurate, to a confidence level of 95 percent, to within plus or minus 25 percent for airborne concentrations of MDA.

(7) **Employee notification of monitoring results**.

(a) The employer must, within 15 working days after the receipt of the results of any monitoring performed under this standard, notify each employee of these results, in writing, either individually or by posting of results in an appropriate location that is accessible to affected employees.

(b) The written notification required by subdivision (a) of this subsection must contain the corrective action being taken by the employer to reduce the employee exposure to or below the PELs, wherever the PELs are exceeded.

(8) **Visual monitoring**. The employer must make routine inspections of employee hands, face, and forearms potentially exposed to MDA. Other potential dermal exposures reported by the employee must be referred to the appropriate medical personnel for observation. If the employer determines that the employee has been exposed to MDA the employer must:

(a) Determine the source of exposure;

(b) Implement protective measures to correct the hazard; and

(c) Maintain records of the corrective actions in accordance with WAC 296-62-07631.

WAC 296-62-07611 Regulated areas.

(1) **Establishment**.

(a) Airborne exposures. The employer must establish regulated areas where airborne concentrations of MDA exceed or can reasonably be expected to exceed, the permissible exposure limits.

(b) Dermal exposures. Where employees are subject to dermal exposure to MDA the employer must establish those work areas as regulated areas.

(2) **Demarcation**. Regulated areas must be demarcated from the rest of the workplace in a manner that minimizes the number of persons potentially exposed.

(3) **Access**. Access to regulated areas must be limited to authorized persons.

(4) **Personal protective equipment and clothing**. Each person entering a regulated area must be supplied with, and required to use, the appropriate personal protective clothing and equipment in accordance with WAC 296-62-07615 and 296-62-07617.

(5) **Prohibited activities**. The employer must ensure that employees do not eat, drink, smoke, chew tobacco or gum, or apply cosmetics in regulated areas.

WAC 296-62-07613 Methods of compliance.

(1) **Engineering controls and work practices**.

(a) The employer must institute engineering controls and work practices to reduce and maintain employee exposure to MDA at or below the PELs except to the extent that the employer can establish that these controls are not feasible or where the provisions of subdivision (b) of this subsection or WAC 296-62-07615(1) apply.

(b) Wherever the feasible engineering controls and work practices which can be instituted are not sufficient to reduce employee exposure to or below the PELs, the employer must use them to reduce employee exposure to the lowest levels achievable by these controls and must supplement them by the use of respiratory protective devices which comply with the requirements of WAC 296-62-07615.

(2) **Compliance program**.

(a) The employer must establish and implement a written program to reduce employee exposure to or below the PELs by means of engineering and work practice controls, as required by subsection (1) of this section, and by use of respiratory protection where permitted under WAC 296-62-076. The program must include a schedule for periodic maintenance (e.g., leak detection) and must include the written plan for emergency situations as specified in WAC 296-62-07607.

(b) Upon request this written program must be furnished for examination and copying to the director, affected employees, and designated employee representatives. The employer must review and, as necessary, update such plans at least once every 12 months to make certain they reflect the current status of the program.

(3) **Employee rotation**. Employee rotation must not be permitted as a means of reducing exposure.

WAC 296-62-07615 Respiratory protection.

(1) **General**. For employees who use respirators required by this section, the employer must provide each employee an appropriate respirator that complies with the requirements of this subsection. Respirators must be used during:

(a) Periods necessary to install or implement feasible engineering and work-practice controls;

(b) Work operations for which the employer establishes that engineering and work-practice controls are not feasible;

(c) Work operations for which feasible engineering and work-practice controls are not yet sufficient to reduce exposure to or below the PEL;

(d) Emergencies.

(2) **Respirator program**. The employer must develop, implement and maintain a respiratory protection program as required by chapter 296-842 WAC, Respirators, which covers each employee required by this chapter to use a respirator.

(3) **Respirator selection**.

(a) The employer must select and provide to employees appropriate respirators as specified in this section and WAC 296-842-13005 in the respirator rule.

(b) Any employee who cannot use a negative-pressure respirator must be given the option of using a positive-pressure respirator, or a supplied-air respirator operated in the continuous-flow or pressure-demand mode.

(c) Provide HEPA filters or N-, or R-, or P-100 filters for powered air-purifying respirators (PAPRs) and negative-pressure air-purifying respirators.

(d) Provide to employees, for escape, one of the following respirator options:

(i) Any self-contained breathing apparatus with a full-facepiece or hood, operated in the positive-pressure or continuous-flow mode ;or

(ii) A full-facepiece air-purifying respirator.

(e) Provide a combination HEPA filter (or N-, R-, or P-100 filter) and organic vapor canister or cartridge with air-purifying respirators when MDA is in liquid form or used as part of a process requiring heat.

WAC 296-62-07617 Protective work clothing and equipment.

(1) **Provision and use**. Where employees are subject to dermal exposure to MDA, where liquids containing MDA can be splashed into the eyes, or where airborne concentrations of MDA are in excess of the PEL, the employer must provide, at no cost to the employee, and ensure that the employee uses, appropriate protective work clothing and equipment which prevent contact with MDA such as, but not limited to:

(a) Aprons, coveralls, or other full-body work clothing;

(b) Gloves, head coverings, and foot coverings; and

(c) Face shields, chemical goggles; or

(d) Other appropriate protective equipment which comply with WAC 296-800-160.

(2) **Removal and storage**.

(a) The employer must ensure that, at the end of their work shift, employees remove MDA-contaminated protective work clothing and equipment that is not routinely removed throughout the day in change rooms provided in accordance with the provisions established for change rooms.

(b) The employer must ensure that, during their work shift, employees remove all other MDA-contaminated protective work clothing or equipment before leaving a regulated area.

(c) The employer must ensure that no employee takes MDA-contaminated work clothing or equipment out of the change room, except those employees authorized to do so for the purpose of laundering, maintenance, or disposal.

(d) MDA-contaminated work clothing or equipment must be placed and stored in closed containers which prevent dispersion of the MDA outside the container.

(e) Containers of MDA-contaminated protective work clothing or equipment which are to be taken out of change rooms or the workplace for cleaning, maintenance, or disposal must bear labels warning of the hazards of MDA.

(3) **Cleaning and replacement**.

(a) The employer must provide the employee with clean protective clothing and equipment. The employer must ensure that protective work clothing or equipment required by this paragraph is cleaned, laundered, repaired, or replaced at intervals appropriate to maintain its effectiveness.

(b) The employer must prohibit the removal of MDA from protective work clothing or equipment by blowing, shaking, or any methods which allow MDA to reenter the workplace.

(c) The employer must ensure that laundering of MDA-contaminated clothing must be done so as to prevent the release of MDA in the workplace.

(d) Any employer who gives MDA-contaminated clothing to another person for laundering must inform such person of the requirement to prevent the release of MDA.

(e) The employer must inform any person who launders or cleans protective clothing or equipment contaminated with MDA of the potentially harmful effects of exposure.

(f) MDA-contaminated clothing must be transported in properly labeled, sealed, impermeable bags or containers.

WAC 296-62-07619 Hygiene facilities and practices.

(1) **Change rooms**.

(a) The employer must provide clean change rooms for employees, who must wear protective clothing, or who must use protective equipment because of their exposure to MDA.

(b) Change rooms must be equipped with separate storage for protective clothing and equipment and for street clothes which prevents MDA contamination of street clothes.

(2) **Showers**.

(a) The employer must ensure that employees, who work in areas where there is the potential for exposure resulting from airborne MDA (e.g., particulates or vapors) above the action level, shower at the end of the work shift.

(i) Shower facilities required by this section must comply with WAC 296-800-23065.

(ii) The employer must ensure that employees who are required to shower pursuant to the provisions contained herein do not leave the workplace wearing any protective clothing or equipment worn during the work shift.

(b) Where dermal exposure to MDA occurs, the employer must ensure that materials spilled or deposited on the skin are removed as soon as possible by methods which do not facilitate the dermal absorption of MDA.

(3) **Lunch facilities**.

(a) Availability and construction.

(i) Whenever food or beverages are consumed at the worksite and employees are exposed to MDA at or above the PEL or are subject to dermal exposure to MDA the employer must provide readily accessible lunch areas.

(ii) Lunch areas located within the workplace and in areas where there is the potential for airborne exposure to MDA at or above the PEL must have a positive pressure, temperature controlled, filtered air supply.

(iii) Lunch areas may not be located in areas within the workplace where the potential for dermal exposure to MDA exists.

(b) The employer must ensure that employees who have been subjected to dermal exposure to MDA or who have been exposed to MDA above the PEL wash their hands and faces with soap and water prior to eating, drinking, smoking, or applying cosmetics.

(c) The employer must ensure that employees exposed to MDA do not enter lunch facilities with MDA-contaminated protective work clothing or equipment.

WAC 296-62-07621 Communication of hazards.

(1) **Hazard communication-General**.

(a) Chemical manufacturers, importers, distributors, and employers must comply with all requirements of the Hazard Communication Standard (HCS), WAC 296-901-140 for MDA.

(b) In classifying the hazards of MDA at least the following hazards are to be addressed: Cancer; liver effects; and skin sensitization.

(c) Employers must include MDA in the hazard communication program established to comply with the HCS, WAC 296-901-140. Employers shall ensure that each employee has access to labels on containers of MDA and to safety data sheets, and is trained in accordance with the requirements of HCS and subsection (4) of this section.

(2) **Signs and labels**.

The employer must post and maintain legible signs demarcating regulated areas and entrances or accessways to regulated areas that bear the following legend:

DANGER MDA MAY CAUSE CANCER
CAUSES DAMAGE TO THE LIVER
RESPIRATORY PROTECTION AND PROTECTIVE CLOTHING
MAY BE REQUIRD TO BE WORN IN THIS AREA

(3) **Safety data sheets (SDS)**. In meeting the obligation to provide safety data sheets, employers must make appropriate use of the information found in Appendices A and B to WAC 296-62-076.

(4) **Information and training**.

(a) The employer must provide employees with information and training on MDA, in accordance with WAC 296-901-14016, at the time of initial assignment and at least annually thereafter.

(b) In addition to the information required under WAC 296-901-140, the employer must:

(i) Provide an explanation of the contents of WAC 296-62-076, including Appendices A and B, and indicate to employees where a copy of the standard is available;

(ii) Describe the medical surveillance program required under WAC 296-62-07625, and explain the information contained in Appendix C; and

(iii) Describe the medical removal provision required under WAC 296-62-07627 and WAC 296-62-07629.

(5) **Access to training materials**.

(a) The employer must make readily available to all affected employees, without cost, all written materials relating to the employee training program, including a copy of this regulation.

(b) The employer must provide to the director, upon request, all information and training materials relating to the employee information and training program.

WAC 296-62-07623 Housekeeping.

(1) All surfaces must be maintained as free as practicable of visible accumulations of MDA.

(2) The employer must institute a program for detecting MDA leaks, spills, and discharges, including regular visual inspections of operations involving liquid or solid MDA.

(3) All leaks must be repaired and liquid or dust spills cleaned up promptly.

(4) Surfaces contaminated with MDA may not be cleared by the use of compressed air.

(5) Shoveling, dry sweeping, and other methods of dry clean-up of MDA may be used where HEPA-filtered vacuuming and/or wet cleaning are not feasible or practical.

(6) Waste, scrap, debris, bags, containers, equipment, and clothing contaminated with MDA must be collected and disposed of in a manner to prevent the reentry of MDA into the workplace.

WAC 296-62-07625 Medical surveillance.

(1) **General.**

(a) The employer must make available a medical surveillance program for employees exposed to MDA:

(i) Employees exposed at or above the action level for 30 or more days per year;

(ii) Employees who are subject to dermal exposure to MDA for 15 or more days per year;

(iii) Employees who have been exposed in an emergency situation;

(iv) Employees whom the employer, based on results from compliance with WAC 296-62-07609(8), has reason to believe are being dermally exposed; and

(v) Employees who show signs or symptoms of MDA exposure.

(b) The employer must ensure that all medical examinations and procedures are performed by, or under the supervision of, a licensed physician, at a reasonable time and place, and provided without cost to the employee.

(2) **Initial examinations**.

(a) Within 150 days of the effective date of this standard, or before the time of initial assignment, the employer must provide each employee covered by subdivision (1)(a) of this section with a medical examination including the following elements:

(i) A detailed history which includes:

(A) Past work exposure to MDA or any other toxic substances;

(B) A history of drugs, alcohol, tobacco, and medication routinely taken (duration and quantity); and

(C) A history of dermatitis, chemical skin sensitization, or previous hepatic disease.

(ii) A physical examination which includes all routine physical examination parameters, skin examination, and signs of liver disease.

(iii) Laboratory tests including:

(A) Liver function tests; and

(B) Urinalysis.

(iv) Additional tests as necessary in the opinion of the physician.

(b) No initial medical examination is required if adequate records show that the employee has been examined in accordance with the requirements of WAC 296-62-076 within the previous six months prior to the effective date of this standard or prior to the date of initial assignment.

(3) **Periodic examinations**.

(a) The employer must provide each employee covered by WAC 296-62-076 with a medical examination at least annually following the initial examination. These periodic examinations must include at least the following elements:

(i) A brief history regarding any new exposure to potential liver toxins, changes in drug, tobacco, and alcohol intake, and the appearance of physical signs relating to the liver and the skin;

(ii) The appropriate tests and examinations including liver function tests and skin examinations; and

(iii) Appropriate additional tests or examinations as deemed necessary by the physician.

(b) If in the physicians' opinion the results of liver function tests indicate an abnormality, the employee must be removed from further MDA exposure in accordance with WAC 296-62-07627 and 296-62-07629. Repeat liver function tests must be conducted on advice of the physician.

(4) **Emergency examinations**. If the employer determines that the employee has been exposed to a potentially hazardous amount of MDA in an emergency situation as addressed in WAC 296-62-07607, the employer must provide medical examinations in accordance with subsection (3) of this section. If the results of liver function testing indicate an abnormality, the employee must be removed in accordance with WAC 296-62-07627 and 296-62-07629. Repeat liver function tests must be conducted on the advice of the physician. If the results of the tests are normal, tests must be repeated two to three weeks from the initial testing. If the results of the second set of tests are normal and on the advice of the physician, no additional testing is required.

(5) **Additional examinations**. Where the employee develops signs and symptoms associated with exposure to MDA, the employer shall provide the employee with an additional medical examination including a liver function test. Repeat liver function tests must be conducted on the advice of the physician. If the results of the tests are normal, tests must be repeated two to three weeks from the initial testing. If the results of the second set of tests are normal and, on the advice of the physician, no additional testing is required.

(6) **Multiple physician review mechanism**.

(a) If the employer selects the initial physician who conducts any medical examination or consultation provided to an employee under WAC 296-62-076, and the employee has signs or symptoms of occupational exposure to MDA (which could include an abnormal liver function test), and the employee disagrees with the opinion of the examining physician, and this opinion could affect the employee's job status, the employee may designate an appropriate, mutually acceptable second physician:

(i) To review any findings, determinations, or recommendations of the initial physician; and

(ii) To conduct such examinations, consultations, and laboratory tests as the second physician deems necessary to facilitate this review.

(b) The employer must promptly notify an employee of the right to seek a second medical opinion after each occasion that an initial physician conducts a medical examination or consultation pursuant to WAC 296-62-076. The employer may condition its participation in, and payment for, the multiple physician review mechanism upon the employee doing the following within fifteen days after receipt of the foregoing notification, or receipt of the initial physician's written opinion, whichever is later:

(i) The employee informing the employer that he or she intends to seek a second medical opinion; and

(ii) The employee initiating steps to make an appointment with a second physician.

(c) If the findings, determinations, or recommendations of the second physician differ from those of the initial physician, then the employer and the employee must ensure that efforts are made for the two physicians to resolve any disagreement.

(d) If the two physicians have been unable to resolve quickly their disagreement, then the employer and the employee through their respective physicians must designate a third physician:

(i) To review any findings, determinations, or recommendations of the prior physicians; and

(ii) To conduct such examinations, consultations, laboratory tests, and discussions with the prior physicians as the third physician deems necessary to resolve the disagreement of the prior physicians.

(e) The employer must act consistent with the findings, determinations, and recommendations of the third physician, unless the employer and the employee reach an agreement which is otherwise consistent with the recommendations of at least one of the three physicians.

(7) **Information provided to the examining and consulting physicians**.

(a) The employer must provide the following information to the examining physician:

(i) A copy of this regulation and its appendices;

(ii) A description of the affected employee's duties as they relate to the employee's potential exposure to MDA;

(iii) The employee's current actual or representative MDA exposure level;

(iv) A description of any personal protective equipment used or to be used; and

(v) Information from previous employment-related medical examinations of the affected employee.

(b) The employer must provide the foregoing information to a second physician under this section upon request either by the second physician or by the employee.

(8) **Physician's written opinion**.

(a) For each examination under WAC 296-62-076, the employer must obtain, and provide the employee with a copy of, the examining physician's written opinion within 15 days of its receipt. The written opinion must include the following:

(i) The occupationally-pertinent results of the medical examination and tests;

(ii) The physician's opinion concerning whether the employee has any detected medical conditions which would place the employee at increased risk of material impairment of health from exposure to MDA;

(iii) The physician's recommended limitations upon the employee's exposure to MDA or upon the employee's use of protective clothing or equipment and respirators; and

(iv) A statement that the employee has been informed by the physician of the results of the medical examination and any medical conditions resulting from MDA exposure which require further explanation or treatment.

(b) The written opinion obtained by the employer must not reveal specific findings or diagnoses unrelated to occupational exposures.

WAC 296-62-07627 Medical removal--Temporary medical removal of an employee.

Temporary medical removal of an employee.

(1) **Temporary removal resulting from occupational exposure**. The employee must be removed from work environments in which exposure to MDA is at or above the action level or where dermal exposure to MDA may occur, following an initial examination (WAC 296-62-07625(2)), periodic examinations (WAC 296-62-07625(3)), an emergency situation (WAC 296-62-07625(4)), or an additional examination (WAC 296-62-07625(5)) in the following circumstances:

(a) When the employee exhibits signs and/or symptoms indicative of acute exposure to MDA; or

(b) When the examining physician determines that an employee's abnormal liver function tests are not associated with MDA exposure but that the abnormalities may be exacerbated as a result of occupational exposure to MDA.

(c) Temporary removal due to a final medical determination.

(i) The employer must remove an employee from work environments in which exposure to MDA is at or above the action level or where dermal exposure to MDA may occur, on each occasion that there is a final medical determination or opinion that the employee has a detected medical condition which places the employee at increased risk of material impairment to health from exposure to MDA.

(ii) For the purposes of WAC 296-62-076, the phrase “final medical determination” shall mean the outcome of the physician review mechanism used pursuant to the medical surveillance provisions of this section.

(iii) Where a final medical determination results in any recommended special protective measures for an employee, or limitations on an employee's exposure to MDA, the employer must implement and act consistent with the recommendation.

(2) **Return of the employee to former job status**.

(a) The employer must return an employee to their former job status:

(i) When the employee no longer shows signs or symptoms of exposure to MDA or upon the advice of the physician.

(ii) When a subsequent final medical determination results in a medical finding, determination, or opinion that the employee no longer has a detected medical condition which places the employee at increased risk of material impairment to health from exposure to MDA.

(b) For the purposes of this section, the requirement that an employer return an employee to their former job status is not intended to expand upon or restrict any rights an employee has or would have had, absent temporary medical removal, to a specific job classification or position under the terms of a collective bargaining agreement.

(3) **Removal of other employee special protective measure or limitations**. The employer must remove any limitations placed on an employee, or end any special protective measures provided to an employee, pursuant to a final medical determination, when a subsequent final medical determination indicates that the limitations or special protective measures are no longer necessary.

(4) **Employer options pending a final medical determination**. Where the physician review mechanism used pursuant to the medical surveillance provisions of WAC 296-62-076, has not yet resulted in a final medical determination with respect to an employee, the employer must act as follows:

(a) Removal. The employer may remove the employee from exposure to MDA, provide special protective measures to the employee, or place limitations upon the employee, consistent with the medical findings, determinations, or recommendations of any of the physicians who have reviewed the employee's health status.

(b) Return. The employer may return the employee to their former job status, and end any special protective measures provided to the employee, consistent with the medical findings, determinations, or recommendations of any of the physicians who have reviewed the employee's health status, with two exceptions.

(i) If the initial removal, special protection, or limitation of the employee resulted from a final medical determination which differed from the findings, determinations, or recommendations of the initial physician; or

(ii) If the employee has been on removal status for the preceding six months as a result of exposure to MDA, then the employer must await a final medical determination.

WAC 296-62-07629 Medical removal protection benefits.

(1) **Provisions of medical removal protection benefits**. The employer must provide to an employee up to six months of medical removal protection benefits on each occasion that an employee is removed from exposure to MDA or otherwise limited pursuant to this section.

(2) **Definition of medical removal protection benefits**. For the purposes of this section, the requirement that an employer provide medical removal protection benefits means that the employer must maintain the earnings, seniority, and other employment rights and benefits of an employee as though the employee had not been removed from normal exposure to MDA or otherwise limited.

(3) **Follow-up medical surveillance during the period of employee removal or limitations**. During the period of time that an employee is removed from normal exposure to MDA or otherwise limited, the employer may condition the provision of medical removal protection benefits upon the employee's participation in follow-up medical surveillance made available pursuant to WAC 296-62-076.

(4) **Workers' compensation claims**. If a removed employee files a claim for workers' compensation payments for an MDA-related disability, then the employer must continue to provide medical removal protection benefits pending disposition of the claim. To the extent that an award is made to the employee for earnings lost during the period of removal, the employer's medical removal protection obligation must be reduced by such amount. The employer must receive no credit for workers' compensation payments received by the employee for treatment-related expenses.

(5) **Other credits**. The employer's obligation to provide medical removal protection benefits to a removed employee must be reduced to the extent that the employee receives compensation for earnings lost during the period of removal either from a publicly or employer-funded compensation program, or receives income from non-MDA-related employment with any employer made possible by virtue of the employee's removal.

(6) **Employees who do not recover within the 6 months of removal**. The employer must take the following measures with respect to any employee removed from exposure to MDA:

(a) The employer must make available to the employee a medical examination pursuant to this section to obtain a final medical determination with respect to the employee;

(b) The employer must ensure that the final medical determination obtained indicates whether or not the employee may be returned to their former job status, and, if not, what steps should be taken to protect the employee's health;

(c) Where the final medical determination has not yet been obtained, or, once obtained indicates that the employee may not yet be returned to their former job status, the employer must continue to provide medical removal protection benefits to the employee until either the employee is returned to former job status, or a final medical determination is made that the employee is incapable of ever safely returning to their former job status; and

(d) Where the employer acts pursuant to a final medical determination which permits the return of the employee to their former job status, despite what would otherwise be an abnormal liver function test, later questions concerning removing the employee again must be decided by a final medical determination. The employer need not automatically remove such an employee pursuant to the MDA removal criteria provided by WAC 296-62-076.

(7) **Voluntary removal or restriction of an employee**. Where an employer, although not required by WAC 296-62-076 to do so, removes an employee from exposure to MDA or otherwise places limitations on an employee due to the effects of MDA exposure on the employee's medical condition, the employer must provide medical removal protection benefits to the employee equal to that required by this section.

WAC 296-62-07631 Recordkeeping.

(1) **Monitoring data for exempted employers**.

(a) Where as a result of the initial monitoring the processing, use, or handling of products made from or containing MDA are exempted from other requirements of this section under WAC 296-62-07601(2), the employer must establish and maintain an accurate record of monitoring relied on in support of the exemption.

(b) This record shall include at least the following information:

(i) he product qualifying for exemption;

(ii) The source of the monitoring data (e.g., was monitoring performed by the employer or a private contractor);

(iii) The testing protocol, results of testing, and/or analysis of the material for the release of MDA;

(iv) A description of the operation exempted and how the data support the exemption (e.g., are the monitoring data representative of the conditions at the affected facility); and

(v) Other data relevant to the operations, materials, processing, or employee exposures covered by the exemption.

(c) The employer must maintain this record for the duration of the employer's reliance upon such objective data.

(2) **Objective data for exempted employers**.

(a) Where the processing, use, or handling of products made from or containing MDA are exempted from other requirements of WAC 296-62-076 under WAC 296-62-07601, the employer must establish and maintain an accurate record of objective data relied upon in support of the exemption.

(b) This record must include at least the following information:

(i) The product qualifying for exemption;

(ii) The source of the objective data;

(iii) The testing protocol, results of testing, and/or analysis of the material for the release of MDA;

(iv) A description of the operation exempted and how the data support the exemption; and

(v) Other data relevant to the operations, materials, processing, or employee exposures covered by the exemption.

(c) The employer must maintain this record for the duration of the employer's reliance upon such objective data.

(3) **Exposure measurements**.

(a) The employer must establish and maintain an accurate record of all measurements required by WAC 296-62-07609, in accordance with chapter 296-802 WAC.

(b) This record shall include:

(i) The dates, number, duration, and results of each of the samples taken, including a description of the procedure used to determine representative employee exposures;

(ii) Identification of the sampling and analytical methods used;

(iii) A description of the type of respiratory protective devices worn, if any; and

(iv) The name, Social Security number, job classification, and exposure levels of the employee monitored and all other employees whose exposure the measurement is intended to represent.

(c) The employer must maintain this record for at least 30 years, in accordance with WAC 296-802-20010.

(4) **Medical surveillance**.

(a) The employer shall establish and maintain an accurate record for each employee subject to medical surveillance required by WAC 296-62-07625, 296-62-07627, and 296-62-07629, in accordance with chapter 296-802 WAC.

(i) This record must include:

(ii) The name, Social Security number, and description of the duties of the employee;

(iii) The employer's copy of the physician's written opinion on the initial, periodic, and any special examinations, including results of medical examination and all tests, opinions, and recommendations;

(iv) Results of any airborne exposure monitoring done for that employee and the representative exposure levels supplied to the physician; and

(v) Any employee medical complaints related to exposure to MDA.

(b) The employer must keep, or assure that the examining physician keeps, the following medical records:

(i) A copy of this standard and its appendices, except that the employer may keep one copy of the standard and its appendices for all employees provided the employer references the standard and its appendices in the medical surveillance record of each employee;

(ii) A copy of the information provided to the physician as required by any sections in the regulatory text;

(iii) A description of the laboratory procedures and a copy of any standards or guidelines used to interpret the test results or references to the information;

(iv) A copy of the employee's medical and work history related to exposure to MDA.

(c) The employer must maintain this record for at least the duration of employment plus 30 years, in accordance with chapter 296-802 WAC.

(5) **Medical removals**.

(a) The employer must establish and maintain an accurate record for each employee removed from current exposure to MDA pursuant to WAC 296-62-07625, 296-62-07627, and 296-62-07629.

(b) Each record must include:

(i) The name and Social Security number of the employee;

(ii) The date of each occasion that the employee was removed from current exposure to MDA as well as the corresponding date on which the employee was returned to their former job status;

(iii) A brief explanation of how each removal was or is being accomplished; and

(iv) A statement with respect to each removal indicating the reason for the removal.

(c) The employer must maintain each medical removal record for at least the duration of an employee's employment plus 30 years.

(6) **Availability**.

(a) The employer must ensure that records required to be maintained by chapter 296-802 WAC must be made available, upon request, to the director for examination and copying.

(b) Employee exposure monitoring records required by WAC 296-62-076 must be provided upon request for examination and copying to employees, employee representatives, and the director in accordance with the applicable sections of chapter 296-800 WAC.

(c) Employee medical records required by this section must be provided upon request for examination and copying, to the subject employee, to anyone having the specific written consent of the subject employee, and to the director in accordance with chapter 296-802 WAC.

(7) **Transfer of records**. The employer must comply with the requirements involving transfer of records set forth in chapter 296-802 WAC.

WAC 296-62-07633 Observation of monitoring.

(1) **Employee observation**. The employer must provide affected employees, or their designated representatives, an opportunity to observe the measuring or monitoring of employee exposure to MDA conducted pursuant to WAC 296-62-07609.

(2) **Observation procedures**. When observation of the measuring or monitoring of employee exposure to MDA requires entry into areas where the use of protective clothing and equipment or respirators is required, the employer must provide the observer with personal protective clothing and equipment or respirators required to be worn by employees working in the area, ensure the use of such clothing and equipment or respirators, and require the observer to comply with all other applicable safety and health procedures.

WAC 296-62-07637 Appendices.

The information contained in Appendices A, B, C, and D of WAC 296-62-076 is not intended by itself, to create any additional obligations not otherwise imposed by this standard nor detract from any existing obligation.

WAC 296-62-07654 Appendix A to WAC 296-62-076--Substance data sheet, for 4,4'-methylenedianiline.

(1) **Substance identification**.

(a) Substance: Methylenedianiline (MDA).

(b) Permissible exposure:

(i) Airborne: Ten parts per billion parts of air (10 ppb), time-weighted average (TWA) for an 8-hour workday and an action level of five parts per billion parts of air (5 ppb).

(ii) Dermal: Eye contact and skin contact with MDA are not permitted.

(c) Appearance and odor: White to tan solid; amine odor.

(2) **Health hazard data**.

(a) Ways in which MDA affects your health. MDA can affect your health if you inhale it, or if it comes in contact with your skin or eyes. MDA is also harmful if you happen to swallow it. Do not get MDA in eyes, on skin, or on clothing.

(b) Effects of overexposure.

(i) Short-term (acute) overexposure: Overexposure to MDA may produce fever, chills, loss of appetite, vomiting, jaundice. Contact may irritate skin, eyes, and mucous membranes. Sensitization may occur.

(ii) Long-term (chronic) exposure. Repeated or prolonged exposure to MDA, even at relatively low concentrations, may cause cancer. In addition, damage to the liver, kidneys, blood, and spleen may occur with long-term exposure.

(iii) Reporting signs and symptoms: You should inform your employer if you develop any signs or symptoms which you suspect are caused by exposure to MDA including yellow staining of the skin.

(3) **Protective clothing and equipment**.

(a) Respirators. Respirators are required for those operations in which engineering controls or work practice controls are not adequate or feasible to reduce exposure to the permissible limit. If respirators are worn, they must have the joint Mine Safety and Health Administration and National Institute for Occupational Safety and Health (NIOSH) seal of approval, and cartridges or canisters must be replaced as necessary to maintain the effectiveness of the respirator.

If you experience difficulty breathing while wearing a respirator, you may request a positive pressure respirator from your employer. You must be thoroughly trained to use the assigned respirator, and the training will be provided by your employer. MDA does not have a detectable odor except at levels well above the permissible exposure limits. Do not depend on odor to warn you when a respirator canister is exhausted. If you can smell MDA while wearing a respirator, proceed immediately to fresh air. If you experience difficulty breathing while wearing a respirator, tell your employer.

(b) Protective clothing. You may be required to wear coveralls, aprons, gloves, face shields, or other appropriate protective clothing to prevent skin contact with MDA. Where protective clothing is required, your employer is required to provide clean garments to you, as necessary, to assure that the clothing protects you adequately. Replace or repair impervious clothing that has developed leaks. MDA should never be allowed to remain on the skin. Clothing and shoes which are not impervious to MDA should not be allowed to become contaminated with MDA, and if they do, the clothing and shoes should be promptly removed and decontaminated. The clothing should be laundered to remove MDA or discarded. Once MDA penetrates shoes or other leather articles, they should not be worn again.

(c) Eye protection. You must wear splashproof safety goggles in areas where liquid MDA may contact your eyes. Contact lenses should not be worn in areas where eye contact with MDA can occur. In addition, you must wear a face shield if your face could be splashed with MDA liquid.

(4) **Emergency and first aid procedures**.

(a) Eye and face exposure. If MDA is splashed into the eyes, wash the eyes for at least 15 minutes. See a doctor as soon as possible.

(b) Skin exposure. If MDA is spilled on your clothing or skin, remove the contaminated clothing and wash the exposed skin with large amounts of soap and water immediately. Wash contaminated clothing before you wear it again.

(c) Breathing. If you or any other person breathes in large amounts of MDA, get the exposed person to fresh air at once. Apply artificial respiration if breathing has stopped. Call for medical assistance or a doctor as soon as possible. Never enter any vessel or confined space where the MDA concentration might be high without proper safety equipment and at least one other person present who will stay outside. A life line should be used.

(d) Swallowing. If MDA has been swallowed and the patient is conscious, do not induce vomiting. Call for medical assistance or a doctor immediately.

(5) **Medical requirements**. If you are exposed to MDA at a concentration at or above the action level for more than 30 days per year, or exposed to liquid mixtures more than 15 days per year, your employer is required to provide a medical examination, including a medical history and laboratory tests, within 60 days of the effective date of this standard and annually thereafter. These tests shall be provided without cost to you. In addition, if you are accidentally exposed to MDA (either by ingestion, inhalation, or skin/eye contact) under conditions known or suspected to constitute toxic exposure to MDA, your employer is required to make special examinations and tests available to you.

(6) **Observation of monitoring**. Your employer is required to perform measurements that are representative of your exposure to MDA and you or your designated representative are entitled to observe the monitoring procedure. You are entitled to observe the steps taken in the measurement procedure and to record the results obtained. When the monitoring procedure is taking place in an area where respirators or personal protective clothing and equipment are required to be worn, you and your representative must also be provided with, and must wear, the protective clothing and equipment.

(7) **Access to records**. You or your representative are entitled to see the records of measurements of your exposure to MDA upon written request to your employer. Your medical examination records can be furnished to your physician or designated representative upon request by you to your employer.

(8) **Precautions for safe use, handling, and storage**.

(a) Material is combustible. Avoid strong acids and their anhydrides. Avoid strong oxidants. Consult supervisor for disposal requirements.

(b) Emergency clean-up. Wear self-contained breathing apparatus and fully clothe the body in the appropriate personal protective clothing and equipment.

WAC 296-62-07656 Appendix B to WAC 296-62-076--Substance technical guidelines, MDA.

(1) **Identification**.

(a) Substance identification. Synonyms: CAS No. 101-77-9. 4,4'-methylenedianiline; 4,4'-methylenebisaniline; methylenedianiline; dianilinomethane.

(b) Formula: $C_{13}H_{14}N_2$.

(2) **Physical data**.

(a) Appearance and odor: White to tan solid; amine odor.

(b) Molecular weight: 198.26.

(c) Boiling point: 398-399 degrees C. at 760 mm Hg.

(d) Melting point: 88-93 degrees C. (190-100 degrees F.).

(e) Vapor pressure: 9 mmHg at 232 degrees C.

(f) Evaporation rate (n-butyl acetate = 1): Negligible.

(g) Vapor density (Air = 1): Not applicable.

(h) Volatile fraction by weight: Negligible.

(i) Specific gravity (Water = 1): Slight.

(j) Heat of combustion: -8.40 kcal/g.

(k) Solubility in water: Slightly soluble in cold water, very soluble in alcohol, benzene, ether, and many organic solvents.

(3) **Fire, explosion, and reactivity hazard data**.

(a) Flash point: 190 degrees C. (374 degrees F.) Setaflash closed cup.

(b) Flash point: 226 degrees C. (439 degrees F.) Cleveland open cup.

(c) Extinguishing media: Water spray; dry chemical; carbon dioxide.

(d) Special firefighting procedures: Wear self-contained breathing apparatus and protective clothing to prevent contact with skin and eyes.

(e) Unusual fire and explosion hazards: Fire or excessive heat may cause production of hazardous decomposition products.

(f) Hazardous polymerization: Will not occur.

(4) **Reactivity data**.

(a) Stability: Stable

(b) Incompatibility: Strong oxidizers.

(c) Hazardous decomposition products: At with any other organic material, combustion may produce carbon monoxide. Oxides of nitrogen may also be present.

(5) **Spill and leak procedures**.

(a) Sweep material onto paper and place in fiber carton.

(b) Package appropriately for safe feed to an incinerator or dissolve in compatible waste solvents prior to incineration.

(c) Dispose of in an approved incinerator equipped with afterburner and scrubber or contract with licensed chemical waste disposal service.

(d) Discharge treatment or disposal may be subject to federal, state, or local laws.

(e) Wear appropriate personal protective equipment.

(6) **Special storage and handling precautions**.

(a) High exposure to MDA can occur when transferring the substance from one container to another. Such operations should be well ventilated and good work practices must be established to avoid spills.

(b) Pure MDA is a solid with a low vapor pressure. Grinding or heating operations increase the potential for exposure.

(c) Store away from oxidizing materials.

(d) Employers shall advise employees of all areas and operations where exposure to MDA could occur.

(7) **Housekeeping and hygiene facilities**.

(a) The workplace should be kept clean, orderly, and in a sanitary condition. The employer should institute a leak and spill detection program for operations involving MDA in order to detect sources of fugitive MDA emissions.

(b) Adequate washing facilities with hot and cold water are to be provided and maintained in a sanitary condition. Suitable cleansing agents should also be provided to assure the effective removal of MDA from the skin.

(8) **Common operations**. Common operations in which exposure to MDA is likely to occur include the following: Manufacture of MDA; manufacture of methylene diisocyanate; curing agent for epoxy resin structures; wire coating operations; and filament winding.

WAC 296-62-07658 Appendix C to WAC 296-62-076--Medical surveillance guidelines for MDA.

(1) **Route of entry**:

Inhalation; skin absorption; ingestion. MDA can be inhaled, absorbed through the skin, or ingested.

(2) **Toxicology**:

MDA is a suspect carcinogen in humans. There are several reports of liver disease in humans and animals resulting from acute exposure to MDA. A well-documented case of an acute cardiomyopathy secondary to exposure to MDA is on record. Numerous human cases of hepatitis secondary to MDA are known. Upon direct contact MDA may also cause damage to the eyes. Dermatitis and skin sensitization have been observed. Almost all forms of acute environmental hepatic injury in humans involve the hepatic parenchyma and produce hepatocellular jaundice. This agent produces intrahepatic cholestasis. The clinical picture consists of cholestatic jaundice, preceded or accompanied by abdominal pain, fever, and chills. Onset in about 60 percent of all observed cases is abrupt with severe abdominal pain. In about 30 percent of observed cases, the illness presented and evolved more slowly and less dramatically, with only slight abdominal pain. In about 10 percent of the cases only jaundice was evident. The cholestatic nature of the jaundice is evident in the prominence of itching, the histologic predominance of bile stasis, and portal inflammatory infiltration, accompanied by only slight parenchymal injury in most cases, and by the moderately elevated transaminase values. Acute, high doses, however, have been known to cause hepatocellular damage resulting in elevated SGPT, SGOT, alkaline phosphatase, and bilirubin.

Absorption through the skin is rapid. MDA is metabolized and excreted over a 48-hour period. Direct contact may be irritating to the skin, causing dermatitis. Also MDA which is deposited on the skin is not thoroughly removed through washing.

MDA may cause bladder cancer in humans. Animal data supporting this assumption is not available nor is conclusive human data. However, human data collected on workers at a helicopter manufacturing facility where MDA is used suggests a higher incidence of bladder cancer among exposed workers.

(3) **Signs and symptoms**:

Skin may become yellow from contact with MDA.

Repeated or prolonged contact with MDA may result in recurring dermatitis (red-itchy, cracked skin) and eye irritation. Inhalation, ingestion, or absorption through the skin at high concentrations may result in hepatitis, causing symptoms such as fever and chills, nausea and vomiting, dark urine, anorexia, rash, right upper quadrant pain, and jaundice. Corneal burns may occur when MDA is splashed in the eyes.

(4) **Treatment of acute toxic effects/emergency situation**:

If MDA gets into the eyes, immediately wash eyes with large amounts of water. If MDA is splashed on the skin, immediately wash contaminated skin with mild soap or detergent. Employee should be removed from exposure and given proper medical treatment. Medical tests required under the emergency section of the medical surveillance subsection (13)(d) must be conducted. If the chemical is swallowed do not induce vomiting but remove by gastric lavage.

WAC 296-62-07660 Appendix D to WAC 296-62-076--Sampling and analytical methods for MDA monitoring and measurement procedures.

Measurements taken for the purpose of determining employee exposure to MDA are best taken so that the representative average 8-hour exposure may be determined from a single 8-hour sample or two 4-hour samples. Short-time interval samples (or grab samples) may also be used to determine average exposure level if a minimum of five measurements are taken in a random manner over the 8-hour work shift.

Random sampling means that any portion of the work shift has the same chance of being sampled as any other. The arithmetic average of all such random samples taken on one work shift is an estimate of an employee's average level of exposure for that work shift. Air samples should be taken in the employee's breathing zone (air that would most nearly represent that inhaled by the employee).

There are a number of methods available for monitoring employee exposures to MDA. The method WISHA currently uses is included below.

The employer, however, has the obligation of selecting any monitoring method which meets the accuracy and precision requirements of the standard under their unique field conditions. The standard requires that the method of monitoring must have an accuracy, to a 95 percent confidence level, of not less than plus or minus 25 percent for the select PEL.

WISHA methodology.

Sampling procedure.

Apparatus:

Samples are collected by use of a personal sampling pump that can be calibrated within +5 percent of the recommended flow rate with the sampling filter in line.

Samples are collected on 37 mm Gelman type A/E glass fiber filters treated with sulfuric acid. The filters are prepared by soaking each filter with 0.5 mL of 0.26N H_2SO_4. (0.26 N H_2SO_4 can be prepared by diluting 1.5 mL of 36N H_2SO_4 to 200 mL with deionized water.) The filters are dried in an oven at 100 degrees C. for one hour and then assembled into three-piece 37 mm polystyrene cassettes without backup pads. The front filter is separated from the back filter by a polystyrene spacer. The cassettes are sealed with shrink bands and the ends are plugged with plastic plugs.

After sampling, the filters are carefully removed from the cassettes and individually transferred to small vials containing approximately 2 mL deionized water. The vials must be tightly sealed. The water can be added before or after the filters are transferred. The vials must be sealable and capable of holding at least 7 mL of liquid. Small glass scintillation vials with caps containing Teflon liners are recommended.

Reagents:

Deionized water is needed for addition to the vials.

Sampling technique:

Immediately before sampling, remove the plastic plugs from the filter cassettes.

Attach the cassette to the sampling pump with flexible tubing and place the cassette in the employee's breathing zone.

After sampling, seal the cassettes with plastic plugs until the filters are transferred to the vials containing deionized water.

At some convenient time within 10 hours of sampling, transfer the sample filters to vials.

Seal the small vials lengthwise.

Submit at least one blank filter with each sample set. Blanks should be handled in the same manner as samples, but no air is drawn through them.

Record sample volumes (in L of air) for each sample, along with any potential interferences.

Retention efficiency:

A retention efficiency study was performed by drawing 100 L of air (80 percent relative humidity) at 1 L/min through sample filters that had been spiked with 0.814 microgram MDA. Instead of using backup pads, blank acid-treated filters were used as backups in each cassette. Upon analysis, the top filters were found to have an average of 91.8 percent of the spiked amount. There was no MDA found on the bottom filters, so the amount lost was probably due to the slight instability of the MDA salt.

Extraction efficiency:

The average extraction efficiency for six filters spiked at the target concentration is 99.6 percent.

The stability of extracted and derivatized samples was verified by reanalyzing the above six samples the next day using fresh standards. The average extraction efficiency for the reanalyzed samples is 98.7 percent.

Recommended air volume and sampling rate:

The recommended air volume is 100 L.

The recommended sampling rate is 1 L/min.

Interferences (sampling):

MDI appears to be a positive interference. It was found that when MDI was spiked onto an acid-treated filter, the MDI converted to MDA after air was drawn through it.

Suspected interferences should be reported to the laboratory with submitted samples.

Safety precautions (sampling):

Attach the sampling equipment to the employees so that it will not interfere with work performance or safety.

Follow all safety procedures that apply to the work area being sampled.

Analytical procedure:

Apparatus: The following are required for analysis.

A GC equipped with an electron capture detector. For this evaluation a Hewlett Packard 5880 Gas Chromatograph equipped with a Nickel 63 High Temperature Electron Capture Detector and a Linearizer was used.

A GC column capable of separating the MDA derivative from the solvent and interferences. A 6 ft X 2 mm ID glass column packed with 3 percent OV-101 coated on 100/120 Gas Chrom Q or a 25 meter DB-1 or DB-5 capillary column is recommended for this evaluation.

A electronic integrator or some other suitable means of measuring peak areas or heights.

Small resealable vials with Teflon-lined caps capable of holding 4 mL.

A dispenser or pipet for toluene capable of delivering 2.0 mL.

Pipets (or repipets with plastic or Teflon tips) capable of delivering 1 mL for the sodium hydroxide and buffer solutions.

A repipet capable of delivering 25 micro-L HFAA.

Syringes for preparation of standards and injection of standards and samples into a GC.

Volumetric flasks and pipets to dilute the pure MDA in preparation of standards.

Disposable pipets to transfer the toluene layers after the samples are extracted.

Reagents:

0.5 NaOH prepared from reagent grade NaOH.

Toluene, pesticide grade. Burdick and Jackson distilled in glass toluene was used.

Heptafluorobutyric acid anhydride (HFAA). HFAA from Pierce Chemical Company was used.

pH 7.0 phosphate buffer, prepared from 136 g potassium dihydrogen phosphate and 1L deionized water. The pH is adjusted to 7.0 with saturated sodium hydroxide solution.

4,4'-Methylenedianiline (MDA), reagent grade.

Standard preparation:

Concentrated stock standards are prepared by diluting pure MDA with toluene. Analytical standards are prepared by injecting µL amounts of diluted stock standards into vials that contain 2.0 mL toluene.

25 µL HFAA are added to each vial and the vials are capped and shaken for 10 seconds.

After 10 min, 1 mL of buffer is added to each vial.

The vials are recapped and shaken for 10 seconds.

After allowing the layers to separate, aliquots of the toluene (upper) layers are removed with a syringe and analyzed by GC.

Analytical standard concentrations should bracket sample concentrations. Thus, if samples fall out of the range of prepared standards, additional standards must be prepared to ascertain detector response.

Sample preparation:

The sample filters are received in vials containing deionized water.

1 mL of 0.5N NaOH and 2.0 mL toluene are added to each vial.

The vials are recapped and shaken for 10 min.

After allowing the layers to separate, approximately 1 mL aliquots of the toluene (upper) layers are transferred to separate vials with clean disposable pipets.

The toluene layers are treated and analyzed.

Analysis:

GC conditions

Zone temperatures:

Column--220 degrees C.

Injector--235 degrees C.

Detector--335 degrees C.

C Gas flows, N_2 Column--30 mL/min

He Column 0.9 mL/min. (capillary) with 30 mL/min. A_rCH_4 (95/5) makeup gas

Injection volume: 5.0 µL.

Column: 6 ft X 1/8 in ID glass, 3% OV-101 on 100/120 Gas Chrom Q or 25 meter x .25 mm DB-1 or DB-5 capillary

Retention time of MDA derivative: 2.5 to 3.5, depending on column and flow

Chromatogram:

Peak areas or heights are measured by an integrator or other suitable means.

A calibration curve is constructed by plotting response (peak areas or heights) of standard injections versus μg of MDA per sample. Sample concentrations must be bracketed by standards.

Interferences (analytical):

Any compound that gives an electron capture detector response and has the same general retention time as the HFAA derivative of MDA is a potential interference. Suspected interferences reported to the laboratory with submitted samples by the industrial hygienist must be considered before samples are derivatized.

GC parameters may be changed to possibly circumvent interferences.

Retention time on a single column is not considered proof of chemical identity. Analyte identity should be confirmed by GC/MS if possible.

Calculations:

The analyte concentration for samples is obtained from the calibration curve in terms of μg MDA per sample. The extraction efficiency is 100 percent. If any MDA is found on the blank, that amount is subtracted from the sample amounts. The air concentrations are calculated using the following formulae: Microgram/m^3 = (microgram MDA per sample) (1000)/(L of air sampled) ppb = (microgram/m^3) (24.46)/(198.3) = (microgram/m^3)(0.1233) where 24.46 is the molar volume at 25 degrees C. and 760 mm Hg.

Safety precautions (analytical):

Avoid skin contact and inhalation of all chemicals.

Restrict the use of all chemicals to a fume hood if possible.

Wear safety glasses and a lab coat at all times while in the lab area.

PART I-1
ASBESTOS, TREMOLITE, ANTHOPHYLLITE, AND ACTINOLITE

WAC **Page**

WAC 296-62-077 Asbestos, tremolite, anthophyllite, and actionlite. 1

WAC 296-62-07701 Scope and application. 1

WAC 296-62-07703 Definitions. 1

WAC 296-62-07705 Permissible exposure limits (PEL) 4

WAC 296-62-07706 Multi-employer worksites 5

WAC 296-62-07709 Exposure assessment and monitoring. 5

WAC 296-62-07711 Regulated areas. 10

WAC 296-62-07712 Requirements for asbestos activities in construction and shipyard work. 11

WAC 296-62-07713 Methods of compliance for asbestos activities in general industry. 22

WAC 296-62-07715 Respiratory protection. 25

WAC 296-62-07717 Protective work clothing and equipment. 27

WAC 296-62-07719 Hygiene facilities and practices. 29

WAC 296-62-07721 Communication of hazards. 32

WAC 296-62-07722 Employee information and training. 39

WAC 296-62-07723 Housekeeping. 42

WAC 296-62-07725 Medical surveillance. 43

WAC 296-62-07727 Recordkeeping. 46

WAC 296-62-07728 Competent person. 48

WAC 296-62-07733 Appendices. 50

WAC 296-62-07735 Appendix A. WISHA reference method-Mandatory 50

WAC 296-62-07737 Appendix B--Detailed procedure for asbestos sampling and analysis--Nonmandatory. 53

WAC 296-62-07741 Appendix D--Medical questionnaires--Mandatory. 69

WAC **Page**

WAC 296-62-07743 Appendix E--Interpretation and classification of chest roentgenograms--Mandatory. 81

WAC 296-62-07745 Appendix F--Work practices and engineering controls for automotive brake and clutch inspection, disassembly, repair and assembly--Mandatory. 81

WAC 296-62-07747 Appendix G--Substance technical information for asbestos--Nonmandatory. 83

WAC 296-62-07749 Appendix H--Medical surveillance guidelines for asbestos--Nonmandatory. 86

WAC 296-62-07751 Appendix I--Work practices and engineering controls for Class I asbestos operations--Nonmandatory. 88

WAC 296-62-07753 Appendix J--Polarized light microscopy of asbestos--Nonmandatory. 94

WAC 296-62-07755 Appendix K--Smoking cessation program information for asbestos, tremolite, anthophyllite, and actinolite--Nonmandatory. 117

WAC 296-62-077 Asbestos, tremolite, anthophyllite, and actinolite.

WAC 296-62-07701 Scope and application.

(1) WAC 296-62-07701 through 296-62-07753 applies to all occupational exposures to asbestos in all industries covered by chapter 49.17 RCW, Washington Industrial Safety and Health Act and chapter 49.26 RCW, Health and Safety--Asbestos.

(2) This part applies to construction work as defined in WAC 296-155-012 except for work involving asbestos-containing asphalt roof coatings, cements, and mastics. The exception for roofing materials does not apply to asphalt coated asbestos felting and similar built-up roofing.

(3) This part applies to ship repairing, shipbuilding and shipbreaking employments and related employments as defined in WAC 296-304-01001 except for work involving asbestos-containing asphalt roof coatings, cements, and mastics. The exception for roofing materials does not apply to asphalt coated asbestos felting and similar built-up roofing.

WAC 296-62-07703 Definitions.

For the purpose of WAC 296-62-07701 through 296-62-07753:

Accredited inspector. Any person meeting the accreditation requirements of the Federal Toxic Substance Control Act, Section 206(a)(1) and (3). 15 U.S.C. 2646(a)(1) and (3).

Aggressive method. Removal or disturbance of building material by sanding, abrading, grinding or other method that breaks, crumbles, or disintegrates intact ACM.

Amended water. Water to which surfactant (wetting agent) has been added to increase the ability of the liquid to penetrate ACM.

Asbestos. Includes chrysotile, amosite, crocidolite, tremolite asbestos, anthophyllite asbestos, actinolite asbestos, and any of these minerals that have been chemically treated and/or altered.

For purposes of this standard, **"asbestos"** includes PACM, as defined below.

Asbestos abatement project. An asbestos project involving three square feet or three linear feet, or more, of asbestos-containing material.

Asbestos-containing material (ACM). Any material containing more than 1% asbestos.

Asbestos project. Includes the construction, demolition, repair, remodeling, maintenance or renovation of any public or private building or structure, mechanical piping equipment or system involving the demolition, removal, encapsulation, salvage, or disposal of material or outdoor activity releasing or likely to release asbestos fibers into the air.

Authorized person. Any person authorized by the employer and required by work duties to be present in regulated areas.

Building/facility/vessel owner. Any legal entity or person who owns any public or private building, vessel, structure, facility, or mechanical system or the remnants thereof, including the agent of such person, but does not include individuals who work on asbestos projects in their own single-family residences, no part of which is used for commercial purposes. Also included is any lessee, who exercises control over management and recordkeeping functions relating to a building, vessel, and/or facility in which activities covered by this standard takes place.

Certified asbestos supervisor. An individual certified by the department under WAC 296-65-012.

Certified asbestos worker. An individual certified by the department under WAC 296-65-010.

Certified industrial hygienist (CIH). One certified in the practice of industrial hygiene by the American Board of Industrial Hygiene.

Class I asbestos work. Activities involving the removal of thermal system insulation or surfacing ACM/PACM.

Class II asbestos work. Activities involving the removal of ACM which is not thermal system insulation or surfacing material. This includes, but is not limited to, the removal of asbestos-containing wallboard, floor tile and sheeting, roofing and siding shingles, and construction mastics.

Class III asbestos work. Repair and maintenance operations where "ACM," including TSI and surfacing ACM and PACM, may be disturbed.

Class IV asbestos work. Maintenance and custodial activities during which employees contact but do not disturb ACM or PACM and activities to clean up dust, waste and debris resulting from Class I, II, and III activities.

Clean room. An uncontaminated room having facilities for the storage of employees' street clothing and uncontaminated materials and equipment.

Closely resemble. The major workplace conditions which have contributed to the levels of historic asbestos exposure, are no more protective than conditions of the current workplace.

Competent person. In addition to the definition in WAC 296-62-07728, one who is capable of identifying existing asbestos, hazards in the workplace and selecting the appropriate control strategy for asbestos exposure, who has the authority to take prompt corrective measures to eliminate them as specified in WAC 296-62-07728. The competent person shall be certified as an asbestos supervisor in compliance with WAC 296-65-030(3) and 296-65-012 for Class I and Class II work, and for Class III and Class IV work involving 3 square feet or 3 linear feet or more of asbestos-containing material. For Class III and Class IV work, involving less than 3 square feet or 3 linear feet, the competent person shall be trained in an operations and maintenance (O&M) course which meets the criteria of EPA (40 CFR 763.92(a)(2)).

Critical barrier. One or more layers of plastic sealed over all openings into a work area or any other similarly placed physical barrier sufficient to prevent airborne asbestos in a work area from migrating to an adjacent area.

Decontamination area. An enclosed area adjacent and connected to the regulated area and consisting of an equipment room, shower area, and clean room, which is used for the decontamination of workers, materials, and equipment contaminated with asbestos.

Demolition. The wrecking or taking out of any load-supporting structural member and any related razing, removing, or stripping of asbestos products. Where feasible, asbestos-containing materials shall be removed from all structures prior to the commencement of any demolition activity as per WAC 296-155-775(9).

Department. The department of labor and industries.

Director. The director of the department of labor and industries or their authorized representative.

Director of NIOSH. The Director, National Institute for Occupational Safety and Health, U.S. Department of Health and Human Services, or designee.

Disturb or disturbance. Refers to activities that disrupt the matrix of ACM or PACM, crumble or pulverize ACM or PACM, or generate visible debris from ACM or PACM. This term includes activities that disrupt the matrix of ACM or PACM, render ACM or PACM friable, or generate visible debris. Disturbance includes cutting away small amounts of ACM or PACM, no greater than the amount that can be contained in one standard size glove bag or waste bag in order to access a building or vessel component. In no event shall the amount of ACM or PACM so disturbed exceed that which can be contained in one glove bag or waste bag which shall not exceed 60 inches in length and width.

Employee exposure. That exposure to airborne asbestos that would occur if the employee were not using respiratory protective equipment.

Equipment room (change room). A contaminated room located within the decontamination area that is supplied with impermeable bags or containers for the disposal of contaminated protective clothing and equipment.

Fiber. A particulate form of asbestos, five micrometers or longer, with a length-to-diameter ratio of at least three to one.

Glove bag. Not more than a 60 x 60 inch impervious plastic bag-like enclosure affixed around an asbestos-containing material, with glove-like appendages through which material and tools may be handled.

High-efficiency particulate air (HEPA) filter. A filter capable of trapping and retaining at least 99.97 percent of all monodispersed particles of 0.3 micrometers mean aerodynamic diameter or larger.

Homogeneous area. An area of surfacing material or thermal system insulation that is uniform in color and texture.

Industrial hygienist. A professional qualified by education, training, and experience to anticipate, recognize, evaluate and develop controls for occupational health hazards.

Intact. The ACM has not crumbled, been pulverized, or otherwise deteriorated so that the asbestos is no longer likely to be bound with its matrix. Friable ACM that is disturbed, as defined in this part, is presumed to be no longer intact.

Modification. For the purpose of WAC 296-62-07712, “modification” means a changed or altered procedure, material or component of a control system, which replaces a procedure, material or component of a required system. Omitting a procedure or component, or reducing or diminishing the stringency or strength of a material or component of the control system is not a “modification” for the purposes of WAC 296-62-07712.

Negative initial exposure assessment. A demonstration by the employer (which complies with the criteria in WAC 296-62-07709) that employee exposure during an operation is expected to be consistently below the PELs.

PACM. Presumed asbestos-containing material.

Presumed asbestos-containing material. Thermal system insulation and surfacing material found in buildings, vessels, and vessel sections constructed no later than 1980. The designation of a material as "PACM" may be rebutted pursuant to WAC 296-62-07721.

Project designer. A person who has successfully completed the training requirements for an abatement project designer established by 40 U.S.C. 763.90(g).

Regulated area. An area established by the employer to demarcate areas where Class I, II, and III asbestos work is conducted, and any adjoining area where debris and waste from such asbestos work accumulate; and a work area within which airborne concentrations of asbestos, exceed or can reasonably be expected to exceed the permissible exposure limit. Requirements for regulated areas are set out in WAC 296-62-07711.

Removal. All operations where ACM and/or PACM is taken out or stripped from structures or substrates, and includes demolition operations.

Renovation. The modifying of any existing vessel, vessel section, structure, or portion thereof.

Repair. Overhauling, rebuilding, reconstructing, or reconditioning of vessels, vessel sections, structures or substrates, including encapsulation or other repair of ACM or PACM attached to vessels, vessel sections, structures or substrates.

Surfacing ACM. Surfacing material which contains more than 1% asbestos.

Surfacing material. Material that is sprayed, troweled-on or otherwise applied to surfaces (such as acoustical plaster on ceilings and fireproofing materials on structural members, or other materials on surfaces for acoustical , fireproofing, and other purposes).

Thermal system insulation (TSI). ACM applied to pipes, fittings, boilers, breaching, tanks, ducts, or other structural components to prevent heat loss or gain.

Thermal system insulation ACM. Thermal system insulation which contains more than 1% asbestos.

WAC 296-62-07705 Permissible exposure limits (PEL).

(1) **Time weighted average (TWA)**. The employer must ensure that no employee is exposed to an airborne concentration of asbestos in excess of 0.1 fiber per cubic centimeter (0.1 f/cc) of air as an eight-hour time-weighted average (TWA) as determined by the method prescribed in Appendix A of this part, or by an equivalent method recognized by the department.

(2) **Excursion limit**. The employer must ensure that no employee is exposed to an airborne concentration of asbestos in excess of 1.0 fiber per cubic centimeter of air (1 f/cc) as averaged over a sampling period of thirty minutes, as determined by the method prescribed in Appendix A of this part, or by an equivalent method recognized by the department.

WAC 296-62-07706 Multi-employer worksites.

(1) On multi-employer worksites, an employer performing work requiring the establishment of a regulated area must inform other employers on the site of the nature of the employer's work with asbestos and/or PACM, of the existence of and requirements pertaining to regulated areas, and the measures taken to ensure that employees of such other employers are not exposed to asbestos.

(2) Asbestos hazards at a multi-employer worksite must be abated by the employer who created or controls the source of asbestos contamination. For example, if there is a significant breach of an enclosure containing Class I work, the employer responsible for erecting the enclosure must repair the breach immediately.

(3) In addition, all employers of employees exposed to asbestos hazards must comply with applicable protective provisions to protect their employees. For example, if employees working immediately adjacent to a Class I asbestos job are exposed to asbestos due to the inadequate containment of such jobs, their employer must either remove the employees from the area until the enclosure breach is repaired; or perform an initial exposure assessment pursuant to WAC 296-62-07709.

(4) All employers of employees working adjacent to regulated areas established by another employer on a multi-employer worksite, must take steps on a daily basis to ascertain the integrity of the enclosure and/or the effectiveness of the control method relied on by the primary asbestos contractor to ensure that asbestos fibers do not migrate to such adjacent areas.

(5) All general contractors on a construction project which includes work covered by this standard must be deemed to exercise general supervisory authority over the work covered by this standard, even though the general contractor is not qualified to serve as the asbestos "competent person" as defined by WAC 296-62-07703. As supervisor of the entire project, the general contractor must ascertain whether the asbestos contractor is in compliance with this standard, and must require such contractor to come into compliance with this standard when necessary.

WAC 296-62-07709 Exposure assessment and monitoring.

(1) **General monitoring criteria**.

(a) Each employer who has a workplace or work operation where exposure monitoring is required under this part must perform monitoring to determine accurately the airborne concentrations of asbestos to which employees may be exposed.

(b) Determinations of employee exposure must be made from breathing zone air samples that are representative of the eight-hour TWA and thirty minute short-term exposures of each employee.

(c) Representative eight-hour TWA employee exposures must be determined on the basis of one or more samples representing full-shift exposure for each shift for each employee in each job classification in each work area.

(d) Representative thirty minute short-term employee exposures must be determined on the basis of one or more samples representing thirty minute exposures associated with operations that are most likely to produce exposures above the excursion limit for each shift for each job classification in each work area.

(2) Exposure monitoring requirements for all occupational exposures to asbestos in all industries covered by the Washington Industrial Safety and Health Act except construction work, as defined in WAC 296-155-012, and except ship repairing, shipbuilding and shipbreaking employments and related employments as defined in WAC 296-304-01001.

(a) Initial monitoring.

(i) Each employer who has a workplace or work operation covered by this standard, except as provided for in (a)(ii) and (iii) of this subsection, must perform initial monitoring of employees who are, or may reasonably be expected to be exposed to airborne concentrations at or above the TWA permissible exposure limit and/or excursion limit. The initial monitoring must be at the initiation of each asbestos job to accurately determine the airborne concentration of asbestos to which employees may be exposed.

(ii) Where the employer or their representative has monitored after March 31, 1992, for the TWA permissible exposure limit and/or excursion limit, and the monitoring satisfies all other requirements of this section, and the monitoring data was obtained during work operations conducted under workplace conditions closely resembling the processes, type of material including percentage of asbestos, control methods, work practices, and environmental conditions used and prevailing in the employer's current operations, the employer may rely on such earlier monitoring results to satisfy the requirements of (a)(i) of this subsection.

(iii) Where the employer has relied upon objective data that demonstrates that asbestos is not capable of being released in airborne concentrations at or above the TWA permissible exposure limit and/or excursion limit under those work conditions of processing, use, or handling expected to have the greatest potential for releasing asbestos, then no initial monitoring is required.

(b) Monitoring frequency (periodic monitoring) and patterns. After the initial determinations required by subsection (2)(a)(i) of this section, samples must be of such frequency and pattern as to represent with reasonable accuracy the levels of exposure of the employees. Sampling must not be at intervals greater than six months for employees whose exposures may reasonably be foreseen to exceed the TWA permissible exposure limit and/or excursion limit.

(c) Daily monitoring within regulated areas: The employer must conduct daily monitoring that is representative of the exposure of each employee who is assigned to work within a regulated area. Exception: When all employees within a regulated area are equipped with full facepiece supplied-air respirators operated in the pressure-demand mode equipped with either an auxiliary positive pressure self-contained breathing apparatus or a HEPA filter, the employer may dispense with the daily monitoring required by this subsection.

(d) Changes in monitoring frequency. If either the initial or the periodic monitoring required by subsection (2)(a) and (b) of this section statistically indicates that employee exposures are below the TWA permissible exposure limit and/or excursion limit, the employer may discontinue the monitoring for those employees whose exposures are represented by such monitoring.

(e) Additional monitoring. Notwithstanding the provisions of subsection (2)(a)(ii) and (c) of this section, the employer must institute the exposure monitoring required under subsection (2)(a)(i) and (ii) of this section whenever there has been a change in the production, process, control equipment, personnel, or work practices that may result in new or additional exposures above the TWA permissible exposure limit and/or excursion limit, or when the employer has any reason to suspect that a change may result in new or additional exposures above the TWA permissible exposure limit and/or excursion limit.

(3) Exposure assessment monitoring requirements for all construction work as defined in WAC 296-155-012 and for all ship repairing, shipbuilding and shipbreaking employments and related employments as defined in WAC 296-304-01001.

(a) Initial exposure assessment.

(i) Each employer who has a workplace or work operation covered by this standard must ensure that a "competent person" conducts an exposure assessment immediately before or at the initiation of the operation to ascertain expected exposures during that operation or workplace. The assessment must be completed in time to comply with the requirements which are triggered by exposure data or lack of a "negative exposure assessment," and to provide information necessary to ensure that all control systems planned are appropriate for that operation and will work properly.

(ii) Basis of initial exposure assessment: Unless a negative exposure assessment has been made according to (b) of this subsection, the initial exposure assessment must, if feasible, be based on monitoring conducted according to (b) of this subsection. The assessment must take into consideration both the monitoring results and all observations, information or calculations which indicate employee exposure to asbestos, including any previous monitoring conducted in the workplace, or of the operations of the employer which indicate the levels of airborne asbestos likely to be encountered on the job. For Class I asbestos work, until the employer conducts exposure monitoring and documents that employees on that job will not be exposed in excess of the PELs, or otherwise makes a negative exposure assessment according to (b) of this subsection, the employer must presume that employees are exposed in excess of the TWA and excursion limit.

(b) Negative exposure assessment: For any one specific asbestos job which will be performed by employees who have been trained in compliance with the standard, the employer may demonstrate that employee exposures will be below the PELs by data which conform to the following criteria:

(i) Objective data demonstrating that the products or material containing asbestos minerals or the activity involving such product or material cannot release airborne fibers in concentrations exceeding the TWA and excursion limit under those work conditions having the greatest potential for releasing asbestos; or

(ii) Where the employer has monitored prior asbestos jobs for the PEL and the excursion limit within 12 months of the current or projected job, the monitoring and analysis were performed in compliance with the asbestos standard in effect; and the data was obtained during work operations conducted under workplace conditions "closely resembling" the processes, type of material including percentage of asbestos, control methods, work practices, and environmental conditions used and prevailing in the employer's current operations, the operations were conducted by employees whose training and experience are no more extensive than that of employees performing the current job, and these data show that under the conditions prevailing and which will prevail in the current workplace there is a high degree of certainty that employee exposures will not exceed the TWA or excursion limit; or

(iii) The results of initial exposure monitoring of the current job made from breathing zone samples that are representative of the 8-hour TWA and 30-minute short-term exposures of each employee covering operations which are most likely during the performance of the entire asbestos job to result in exposures over the PELs.

(c) Periodic monitoring.

(i) Class I and Class II operations. The employer must conduct daily monitoring that is representative of the exposure of each employee who is assigned to work within a regulated area who is performing Class I or II work, unless the employer according to (b) of this subsection, has made a negative exposure assessment for the entire operation.

(ii) All operations under the standard other than Class I and II operations. The employer must conduct periodic monitoring of all work where exposures are expected to exceed a PEL, at intervals sufficient to document the validity of the exposure prediction.

(iii) Exception. When all employees required to be monitored daily are equipped with supplied-air respirators operated in the pressure demand mode, the employer may dispense with the daily monitoring required by subsection (2)(c) of this section. However, employees performing Class I work using a control method which is not listed in WAC 296-62-07712 or using a modification of a listed control method, must continue to be monitored daily even if they are equipped with supplied-air respirators.

(d) Termination of monitoring. If the periodic monitoring required by (c) of this subsection reveals that employee exposures, as indicated by statistically reliable measurements, are below the permissible exposure limit and excursion limit the employer may discontinue monitoring for those employees whose exposures are represented by such monitoring.

(e) Monitoring outside negative-pressure enclosures: The employer must conduct representative area monitoring of the airborne fiber levels at least every other day at the HEPA machine exhaust and entrance to the decontamination area.

(f) Additional monitoring. Notwithstanding the provisions of (b), (c), and (d) of this subsection, the employer must institute the exposure monitoring required under (c) of this subsection whenever there has been a change in process, control equipment, personnel or work practices that may result in new or additional exposures above the permissible exposure limit and/or excursion limit or when the employer has any reason to suspect that a change may result in new or additional exposures above the permissible exposure limit and/or excursion limit. Such additional monitoring is required regardless of whether a "negative exposure assessment" was previously produced for a specific job.

(g) Preabatement monitoring. Prior to the start of asbestos work, representative area monitoring must be conducted for comparison to clearance monitoring as required by subsection (3)(h) of this section. Preabatement air monitoring is not required for outdoor work.

(h) Clearance monitoring. Representative area air monitoring must be taken at the completion of the asbestos work. Air sample results must be obtained before removal or reoccupancy of the regulated area. Clearance air monitoring is not required for outdoor asbestos work. The employer must demonstrate by monitoring that the airborne concentration is below:

(i) The permissible exposure limit; or

(ii) At or below the airborne fiber level existing prior to the start of the asbestos work, whichever level is lower.

(4) **Method of monitoring**.

(a) All samples taken to satisfy the employee exposure monitoring requirements of this section must be personal samples collected following the procedures specified in WAC 296-62-07735, Appendix A.

(b) Monitoring must be performed by persons having a thorough understanding of monitoring principles and procedures and who can demonstrate proficiency in sampling techniques.

(c) All samples taken to satisfy the monitoring requirements of this section must be evaluated using the WISHA reference method specified in WAC 296-62-07735, Appendix A, or an equivalent counting method recognized by the department.

(d) If an equivalent method to the WISHA reference method is used, the employer must ensure that the method meets the following criteria:

(i) Replicate exposure data used to establish equivalency are collected in side-by-side field and laboratory comparisons; and

(ii) The comparison indicates that ninety percent of the samples collected in the range 0.5 to 2.0 times the permissible limit have an accuracy range of plus or minus twenty-five percent of the WISHA reference method results at a ninety-five percent confidence level as demonstrated by a statistically valid protocol; and

(iii) The equivalent method is documented and the results of the comparison testing are maintained.

(e) To satisfy the monitoring requirements of this section, employers must use the results of monitoring analysis performed by laboratories which have instituted quality assurance programs that include the elements as prescribed in WAC 296-62-07735, Appendix A.

(5) **Employee notification of monitoring results**.

(a) The employer must, as soon as possible but no later than within five days for construction and shipyard industries and fifteen working days for other industries, after the receipt of the results of any monitoring performed under the standard, notify the affected employees of these results in writing either individually or by posting of results in an appropriate location that is accessible to affected employees.

(b) The written notification required by (a) of this subsection must contain the corrective action being taken by the employer to reduce employee exposure to or below the TWA and/or excursion exposure limits, wherever monitoring results indicated that the TWA and/or excursion exposure limits had been exceeded.

(6) **Observation of monitoring**.

(a) The employer must provide affected employees or their designated representatives an opportunity to observe any monitoring of employee exposure to asbestos conducted in accordance with this section.

(b) When observation of the monitoring of employee exposure to asbestos requires entry into an area where the use of protective clothing or equipment is required, the observer must be provided with and be required to use such clothing and equipment and must comply with all other applicable safety and health procedures.

WAC 296-62-07711 Regulated areas.

(1) **General**. The employer must establish a regulated area in work areas where airborne concentrations of asbestos exceed or can reasonably be expected to exceed the permissible exposure limits prescribed in WAC 296-62-07705. All Class I, II and III asbestos work must be conducted within regulated areas. All other operations covered by this standard must be conducted within the regulated area where airborne concentrations of asbestos exceed or can reasonably be expected to exceed permissible exposure limits. Regulated areas must comply with the requirements of subsections (2), (3), (4), (5), (6), (7), and (8) of this section.

(2) **Demarcation**. The regulated area must be demarcated in any manner that minimizes the number of persons within the area and protects persons outside the area from exposure to airborne asbestos. Where critical barriers or negative pressure enclosures are used, they may demarcate the regulated area. Signs must be provided and displayed pursuant to the requirements of WAC 296-62-07721.

(3) **Access**. Access to regulated areas must be limited to authorized persons or to persons authorized by the Washington Industrial Safety and Health Act or regulations issued pursuant thereto.

(4) **Provision of respirators**. Each person entering a regulated area where employees are required in WAC 296-62-07715(1) to wear respirators must be supplied with and required to use a respirator, selected in accordance with WAC 296-62-07715(2).

(5) **Protective clothing**. All persons entering a regulated area must be supplied with and required to wear protective clothing, selected in accordance with WAC 296-62-07717.

(6) **Prohibited activities**. The employer must ensure that employees do not eat, drink, smoke, chew tobacco or gum, or apply cosmetics in the regulated areas.

(7) **Permit-required confined space**. The employer must determine if a permit-required confined space hazard exists and must take any necessary precautions in accordance with chapter 296-809 WAC.

(8) **Competent persons**. For construction and shipyard work the employer must ensure that all asbestos work performed within regulated areas is supervised by a competent person, as defined in WAC 296-62-07703. The duties of the competent person are set out in WAC 296-62-07728.

WAC 296-62-07712 Requirements for asbestos activities in construction and shipyard work.

(1) Methods of compliance, the following engineering controls and work practices of this section must be used for construction work defined in WAC 296-155-012 and for all ship repair defined in WAC 296-304-010.

(2) Engineering controls and work practices for all operations covered by this section. The employer must use the following engineering controls and work practices in all operations covered by this section, regardless of the levels of exposure:

(a) Vacuum cleaners equipped with HEPA filters to collect all debris and dust containing ACM and PACM, except as provided in subsection (10)(b) of this section in the case of roofing material.

(b) Wet methods, or wetting agents, to control employee exposures during asbestos handling, mixing, removal, cutting, application, and cleanup, except where employers demonstrate that the use of wet methods is infeasible due to, for example, the creation of electrical hazards, equipment malfunction, and, in roofing, except as provided in subsection (10)(b) of this section.

(c) Asbestos must be handled, mixed, applied, removed, cut, scored, or otherwise worked in a wet saturated state to prevent the emission of airborne fibers unless the usefulness of the product would be diminished thereby.

(d) Prompt cleanup and disposal of wastes and debris contaminated with asbestos in leak-tight containers except in roofing operations, where the procedures specified in this section apply.

(3) In addition to the requirements of subsection (2) of this section, the employer must use the following control methods to achieve compliance with the TWA permissible exposure limit and excursion limit prescribed by WAC 296-62-07705:

(a) Local exhaust ventilation equipped with HEPA filter dust collection systems;

(b) Enclosure or isolation of processes producing asbestos dust;

(c) Ventilation of the regulated area to move contaminated air away from the breathing zone of employees and toward a filtration or collection device equipped with a HEPA filter;

(d) Use of other work practices and engineering controls that the department can show to be feasible;

(e) Wherever the feasible engineering and work practice controls described above are not sufficient to reduce employee exposure to or below the permissible exposure limit and/or excursion limit prescribed in WAC 296-62-07705, the employer must use them to reduce employee exposure to the lowest levels attainable by these controls and must supplement them by the use of respiratory protection that complies with the requirements of WAC 296-62-07715.

(4) **Prohibitions**. The following work practices and engineering controls must not be used for work related to asbestos or for work which disturbs ACM or PACM, regardless of measured levels of asbestos exposure or the results of initial exposure assessments:

(a) High-speed abrasive disc saws that are not equipped with point or cut ventilator or enclosures with HEPA filtered exhaust air;

(b) Compressed air used to remove asbestos, or materials containing asbestos, unless the compressed air is used in conjunction with an enclosed ventilation system designed to capture the dust cloud created by the compressed air;

(c) Dry sweeping, shoveling or other dry cleanup of dust and debris containing ACM and PACM;

(d) Employee rotation as a means of reducing employee exposure to asbestos.

(5) **Cleanup**.

(a) After completion of asbestos work (removal, demolition, and renovation operations), all surfaces in and around the work area must be cleared of any asbestos debris.

(b) Encapsulant must be applied to all areas where asbestos has been removed to ensure binding of any remaining fibers.

(6) **Class I requirements**. The following engineering controls and work practices and procedures must be used:

(a) All Class I work, including the installation and operation of the control system must be supervised by a competent person as defined in WAC 296-62-07703;

(b) For all Class I jobs involving the removal of more than 25 linear or 10 square feet of thermal system insulation or surfacing material; for all other Class I jobs, where the employer cannot produce a negative exposure assessment according to WAC 296-62-07709(3), or where employees are working in areas adjacent to the regulated area, while the Class I work is being performed, the employer must use one of the following methods to ensure that airborne asbestos does not migrate from the regulated area:

(i) Critical barriers must be placed over all the openings to the regulated area, except where activities are performed outdoors; or

(ii) The employer must use another barrier or isolation method which prevents the migration of airborne asbestos from the regulated area, as verified by perimeter area surveillance during each work shift at each boundary of the regulated area, showing no visible asbestos dust; and perimeter area monitoring showing that clearance levels contained in 40 CFR Part 763, Subpart E, of the EPA Asbestos in Schools Rule are met, or that perimeter area levels, measured by Phase Contrast Microscopy (PCM) are no more than background levels representing the same area before the asbestos work began. The results of such monitoring must be made known to the employer no later than 24 hours from the end of the work shift represented by such monitoring. Exception: For work completed outdoors where employees are not working in areas adjacent to the regulated areas, (a) of this subsection is satisfied when the specific control methods in subsection (7) of this section are used;

(c) For all Class I jobs, HVAC systems must be isolated in the regulated area by sealing with a double layer of 6 mil plastic or the equivalent;

(d) For all Class I jobs, impermeable dropcloths must be placed on surfaces beneath all removal activity;

(e) For all Class I jobs, all objects within the regulated area must be covered with impermeable dropcloths or plastic sheeting which is secured by duct tape or an equivalent;

(f) For all Class I jobs where the employer cannot produce a negative exposure assessment, or where exposure monitoring shows that a PEL is exceeded, the employer must ventilate the regulated area to move contaminated air away from the breathing zone of employees toward a HEPA filtration or collection device.

(7) **Specific control methods for Class I work**. In addition, Class I asbestos work must be performed using one or more of the following control methods according to the limitations stated below:

(a) Negative pressure enclosure (NPE) systems: NPE systems may be used where the configuration of the work area does not make the erection of the enclosure infeasible, with the following specifications and work practices:

(i) Specifications:

(A) The negative pressure enclosure (NPE) may be of any configuration;

(B) At least 4 air changes per hour must be maintained in the NPE;

(C) A minimum of -0.02 column inches of water pressure differential, relative to outside pressure, must be maintained within the NPE as evidenced by manometric measurements;

(D) The NPE must be kept under negative pressure throughout the period of its use; and

(E) Air movement must be directed away from employees performing asbestos work within the enclosure, and toward a HEPA filtration or collection device.

(ii) Work practices:

(A) Before beginning work within the enclosure and at the beginning of each shift, the NPE must be inspected for breaches and smoke-tested for leaks, and any leaks sealed.

(B) Electrical circuits in the enclosure must be deactivated, unless equipped with ground-fault circuit interrupters.

(b) Glove bag systems may be used to remove PACM and/or ACM from straight runs of piping and elbows and other connections with the following specifications and work practices:

(i) Specifications:

(A) Glove bags must be made of 6 mil thick plastic and must be seamless at the bottom.

(B) Glove bags used on elbows and other connections must be designed for that purpose and used without modifications.

(ii) Work practices:

(A) Each glove bag must be installed so that it completely covers the circumference of pipe or other structure where the work is to be done.

(B) Glove bags must be smoke-tested for leaks and any leaks sealed prior to use.

(C) Glove bags may be used only once and may not be moved.

(D) Glove bags must not be used on surfaces whose temperature exceeds 150oF.

(E) Prior to disposal, glove bags must be collapsed by removing air within them using a HEPA vacuum.

(F) Before beginning the operation, loose and friable material adjacent to the glove bag/box operation must be wrapped and sealed in two layers of six mil plastic or otherwise rendered intact.

(G) Where system uses attached waste bag, such bag must be connected to collection bag using hose or other material which must withstand pressure of ACM waste and water without losing its integrity.

(H) Sliding valve or other device must separate waste bag from hose to ensure no exposure when waste bag is disconnected.

(I) At least two persons must perform Class I glove bag removal operations.

(c) Negative pressure glove bag systems. Negative pressure glove bag systems may be used to remove ACM or PACM from piping.

(i) Specifications: In addition to specifications for glove bag systems above, negative pressure glove bag systems must attach HEPA vacuum systems or other devices to bag during removal.

(ii) Work practices:

(A) The employer must comply with the work practices for glove bag systems in this section.

(B) The HEPA vacuum cleaner or other device used during removal must run continually during the operation until it is completed at which time the bag must be collapsed prior to removal of the bag from the pipe.

(C) Where a separate waste bag is used along with a collection bag and discarded after one use, the collection bag may be reused if rinsed clean with amended water before reuse.

(d) Negative pressure glove box systems: Negative pressure glove boxes may be used to remove ACM or PACM from pipe runs with the following specifications and work practices:

(i) Specifications:

(A) Glove boxes must be constructed with rigid sides and made from metal or other material which can withstand the weight of the ACM and PACM and water used during removal.

(B) A negative pressure generator must be used to create negative pressure in the system.

(C) An air filtration unit must be attached to the box.

(D) The box must be fitted with gloved apertures.

(E) An aperture at the base of the box must serve as a bagging outlet for waste ACM and water.

(F) A back-up generator must be present on site.

(G) Waste bags must consist of 6 mil thick plastic double-bagged before they are filled or plastic thicker than 6 mil.

(ii) Work practices:

(A) At least two persons must perform the removal.

(B) The box must be smoke-tested for leaks and any leaks sealed prior to each use.

(C) Loose or damaged ACM adjacent to the box must be wrapped and sealed in two layers of 6 mil plastic prior to the job, or otherwise made intact prior to the job.

(D) A HEPA filtration system must be used to maintain pressure barrier in box.

(e) Water spray process system. A water spray process system may be used for removal of ACM and PACM from cold line piping if, employees carrying out such process have completed a 40-hour separate training course in its use, in addition to training required for employees performing Class I work. The system must meet the following specifications and must be performed by employees using the following work practices:

(i) Specifications:

(A) Piping must be surrounded on 3 sides by rigid framing.

(B) A 360 degree water spray, delivered through nozzles supplied by a high pressure separate water line, must be formed around the piping.

(C) The spray must collide to form a fine aerosol which provides a liquid barrier between workers and the ACM and PACM.

(ii) Work practices:

(A) The system must be run for at least 10 minutes before removal begins.

(B) All removal must take place within the water barrier.

(C) The system must be operated by at least three persons, one of whom must not perform removal, but must check equipment, and ensure proper operation of the system.

(D) After removal, the ACM and PACM must be bagged while still inside the water barrier.

(f) A small walk-in enclosure which accommodates no more than two persons (mini-enclosure) may be used if the disturbance or removal can be completely contained by the enclosure with the following specifications and work practices:

(i) Specifications:

(A) The fabricated or job-made enclosure must be constructed of 6 mil plastic or equivalent.

(B) The enclosure must be placed under negative pressure by means of a HEPA filtered vacuum or similar ventilation unit.

(C) Change room. A small change room made of 6-mil-thick polyethylene plastic should be contiguous to the mini-enclosure, and is necessary to allow the worker to vacuum off their protective coveralls and remove them before leaving the work area. While inside the enclosure, the worker should wear Tyvek disposable coveralls or equivalent and must use the appropriate HEPA-filtered dual cartridge respiratory protection. The advantages of mini-enclosures are that they limit the spread of asbestos contamination, reduce the potential exposure of bystanders and other workers who may be working in adjacent areas, and are quick and easy to install.

The disadvantage of mini-enclosures is that they may be too small to contain the equipment necessary to create a negative-pressure within the enclosure; however, the double layer of plastic sheeting will serve to restrict the release of asbestos fibers to the area outside the enclosure.

(ii) Work practices:

(A) Before use, the mini-enclosure must be inspected for leaks and smoke-tested to detect breaches, and any breaches sealed.

(B) Before reuse, the interior must be completely washed with amended water and HEPA-vacuumed.

(C) During use, air movement must be directed away from the employee's breathing zone within the mini-enclosure.

(8) **Alternative control methods for Class I work**. Class I work may be performed using a control method which is not referenced in subsection (2)(a) through (3)(e) of this section, or which modifies a control method referenced in subsection (2)(a) through (3)(e) of this section, if the following provisions are complied with:

(a) The control method must enclose, contain or isolate the processes or source of airborne asbestos dust, before it enters the breathing zone of employees.

(b) A certified industrial hygienist or licensed professional engineer who is also qualified as a project designer as defined in WAC 296-62-07703, must evaluate the work area, the projected work practices and the engineering controls and must certify in writing that the planned control method is adequate to reduce direct and indirect employee exposure to below the PELs under worst-case conditions of use, and that the planned control method will prevent asbestos contamination outside the regulated area, as measured by clearance sampling which meets the requirements of EPA's Asbestos in Schools rule issued under AHERA, or perimeter monitoring which meets the criteria in subsection (6)(b)(ii) of this section. Where the TSI or surfacing material to be removed is 25 linear or 10 square feet or less, the evaluation required in subsection (8)(b) of this section may be performed by a competent person.

(c) Before work which involves the removal of more than 25 linear or 10 square feet of thermal system insulation or surfacing material is begun using an alternative method which has been the subject of subsection (2)(a) through (3)(e) of this section required evaluation and certification, the employer must include a copy of such evaluation and certification with notifications required by WAC 296-65-020, Notification requirements. The submission must not constitute approval by WISHA.

(d) The evaluation of employee exposure required in WAC 296-62-07712(8) must include and be based on sampling and analytical data representing employee exposure during the use of such method under the worst-case conditions and by employees whose training and experiences are equivalent to employees who are to perform the current job.

(9) **Work practices and engineering controls for Class II work**.

(a) All Class II work must be supervised by a competent person as defined in WAC 296-62-07703.

(b) For all indoor Class II jobs, where the employer has not produced a negative exposure assessment according to WAC 296-62-07709(3), or where during the job, changed conditions indicate there may be exposure above the PEL or where the employer does not remove the ACM in a substantially intact state, the employer must use one of the following methods to ensure that airborne asbestos does not migrate from the regulated area:

(i) Critical barriers must be placed over all openings to the regulated area; or

(ii) The employer must use another barrier or isolation method which prevents the migration of airborne asbestos from the regulated area, as verified by perimeter area monitoring or clearance monitoring which meets the criteria set out in subsection (6)(b)(ii) of this section.

(c) Impermeable dropcloths must be placed on surfaces beneath all removal activity.

(d) All Class II asbestos work must be performed using the work practices and requirements set out above in subsection (2) of this section.

(10) **Additional controls for Class II work**. Class II asbestos work must also be performed by complying with the work practices and controls designated for each type of asbestos work to be performed, set out in this paragraph. Where more than one control method may be used for a type of asbestos work, the employer may choose one or a combination of designated control methods. Class II work also may be performed using a method allowed for Class I work, except that glove bags and glove boxes are allowed if they fully enclose the Class II material to be removed.

(a) For removing vinyl and asphalt flooring materials which contain ACM or for which in buildings constructed no later than 1980, the employer has not verified the absence of ACM according to WAC 296-62-07712 (10)(a)(ix). The employer must ensure that employees comply with the following work practices and that employees are trained in these practices according to WAC 296-62-07722.

(i) Flooring or its backing must not be sanded.

(ii) Vacuums equipped with HEPA filter, disposable dust bag, and metal floor tool (no brush) must be used to clean floors.

(iii) Resilient sheeting must be removed by cutting with wetting of the snip point and wetting during delamination. Rip-up of resilient sheet floor material is prohibited.

(iv) All scraping of residual adhesive and/or backing must be performed using wet methods.

(v) Dry sweeping is prohibited.

(vi) Mechanical chipping is prohibited unless performed in a negative pressure enclosure which meets the requirements of subsection (7)(a) of this section.

(vii) Tiles must be removed intact, unless the employer demonstrates that intact removal is not possible.

(viii) When tiles are heated and can be removed intact, wetting may be omitted.

(ix) Resilient flooring material including associated mastic and backing must be assumed to be asbestos-containing unless an industrial hygienist determines that it is asbestos-free using recognized analytical techniques.

(b) For removing roofing material which contains ACM the employer must ensure that the following work practices are followed:

(i) Roofing material must be removed in an intact state to the extent feasible.

(ii) Wet methods must be used to remove roofing materials that are not intact, or that will be rendered not intact during removal, unless such wet methods are not feasible or will create safety hazards.

(iii) Cutting machines must be continuously misted during use, unless a competent person determines that misting substantially decreases worker safety.

(iv) When removing built-up roofs with asbestos-containing roofing felts and an aggregate surface using a power roof cutter, all dust resulting from the cutting operation must be collected by a HEPA dust collector, or must be HEPA vacuumed by vacuuming along the cut line. When removing built-up roofs with asbestos-containing roofing felts and a smooth surface using a power roof cutter, the dust resulting from the cutting operation must be collected either by a HEPA dust collector or HEPA vacuuming along the cut line, or by gently sweeping and then carefully and completely wiping up the still wet dust and debris left along the cut line. The dust and debris must be immediately bagged or placed in covered containers.

(v) Asbestos-containing material that has been removed from a roof must not be dropped or thrown to the ground. Unless the material is carried or passed to the ground by hand, it must be lowered to the ground via covered, dust-tight chute, crane or hoist:

(A) Any ACM that is not intact must be lowered to the ground as soon as is practicable, but in any event no later than the end of the work shift. While the material remains on the roof it must either be kept wet, placed in an impermeable waste bag, or wrapped in plastic sheeting.

(B) Intact ACM must be lowered to the ground as soon as is practicable, but in any event no later than the end of the work shift.

(vi) Upon being lowered, unwrapped material must be transferred to a closed receptacle in such manner so as to preclude the dispersion of dust.

(vii) Roof level heating and ventilation air intake sources shall be isolated or the ventilation system must be shut down.

(viii) Notwithstanding any other provision of this section, removal or repair of sections of intact roofing less than 25 square feet in area does not require use of wet methods or HEPA vacuuming as long as manual methods which do not render the material nonintact are used to remove the material and no visible dust is created by the removal method used. In determining whether a job involves less than 25 square feet, the employer must include all removal and repair work performed on the same roof on the same day.

(c) When removing cementitious asbestos-containing siding and shingles or transite panels containing ACM on building exteriors (other than roofs, where subsection (10)(b) of this section applies) the employer must ensure that the following work practices are followed:

(i) Cutting, abrading or breaking siding, shingles, or transite panels, must be prohibited unless the employer can demonstrate that methods less likely to result in asbestos fiber release cannot be used.

(ii) Each panel or shingle must be sprayed with amended water prior to removal.

(iii) Unwrapped or unbagged panels or shingles must be immediately lowered to the ground via covered dust-tight chute, crane or hoist, or placed in an impervious waste bag or wrapped in plastic sheeting and lowered to the ground no later than the end of the work shift.

(iv) Nails must be cut with flat, sharp instruments.

(d) When removing gaskets containing ACM, the employer must ensure that the following work practices are followed:

(i) If a gasket is visibly deteriorated and unlikely to be removed intact, removal must be undertaken within a glove bag as described in subsection (7)(b) of this section.

(ii) (Reserved.)

(iii) The gasket must be immediately placed in a disposal container.

(iv) Any scraping to remove residue must be performed wet.

(e) When performing any other Class II removal of asbestos-containing material for which specific controls have not been listed in subsection (10) of this section, the employer must ensure that the following work practices are complied with.

(i) The material must be thoroughly wetted with amended water prior to and during its removal.

(ii) The material must be removed in an intact state unless the employer demonstrates that intact removal is not possible.

(iii) Cutting, abrading or breaking the material must be prohibited unless the employer can demonstrate that methods less likely to result in asbestos fiber release are not feasible.

(iv) Asbestos-containing material removed, must be immediately bagged or wrapped, or kept wet until transferred to a closed receptacle, no later than the end of the work shift.

(f) Alternative work practices and controls. Instead of the work practices and controls listed in subsection (10) of this section, the employer may use different or modified engineering and work practice controls if the following provisions are complied with.

(i) The employer must demonstrate by data representing employee exposure during the use of such method under conditions which closely resemble the conditions under which the method is to be used, that employee exposure will not exceed the PELs under any anticipated circumstances.

(ii) A competent person must evaluate the work area, the projected work practices and the engineering controls, and must certify in writing, that the different or modified controls are adequate to reduce direct and indirect employee exposure to below the PELs under all expected conditions of use and that the method meets the requirements of this standard. The evaluation must include and be based on data representing employee exposure during the use of such method under conditions which closely resemble the conditions under which the method is to be used for the current job, and by employees whose training and experience are equivalent to employees who are to perform the current job.

(11) **Work practices and engineering controls for Class III asbestos work**. Class III asbestos work must be conducted using engineering and work practice controls which minimize the exposure to employees performing the asbestos work and to bystander employees.

(a) The work must be performed using wet methods.

(b) To the extent feasible, the work must be performed using local exhaust ventilation.

Where the disturbance involves drilling, cutting, abrading, sanding, chipping, braking, or sawing of thermal system insulation or surfacing material, the employer must use impermeable dropcloths, and must isolate the operation using mini-enclosures or glove bag systems according to subsection (7) of this section or another isolation method.

(c) Where the employer does not produce a "negative exposure assessment" for a job, or where monitoring results show the PEL has been exceeded, the employer must contain the area using impermeable dropcloths and plastic barriers or their equivalent, or must isolate the operation using a control system listed in and in compliance with subsection (7) of this section.

(d) Employees performing Class III jobs, which involve the disturbance of thermal system insulation or surfacing material, or where the employer does not produce a "negative exposure assessment" or where monitoring results show a PEL has been exceeded, must wear respirators which are selected, used and fitted according to provisions of WAC 296-62-07715.

(12) **Class IV asbestos work**. Class IV asbestos jobs must be conducted by employees trained according to the asbestos awareness training program set out in WAC 296-62-07722. In addition, all Class IV jobs must be conducted in conformity with the requirements set out in this section, mandating wet methods, HEPA vacuums, and prompt clean up of debris containing ACM and PACM.

(a) Employees cleaning up debris and waste in a regulated area where respirators are required must wear respirators which are selected, used and fitted according to provisions of WAC 296-62-07715.

(b) Employers of employees who clean up waste and debris in, and employers in control of, areas where friable thermal system insulation or surfacing material is accessible, must assume that such waste and debris contain asbestos.

(13) Alternative methods of compliance for installation, removal, repair, and maintenance of certain roofing and pipeline coating materials. Notwithstanding any other provision of this section, an employer who complies with all provisions of subsection (10)(a) and (b) of this section when installing, removing, repairing, or maintaining intact pipeline asphaltic wrap, or roof flashings which contain asbestos fibers encapsulated or coated by bituminous or resinous compounds will be deemed to be in compliance with this section. If an employer does not comply with all provisions of this subsection (13), or if during the course of the job the material does not remain intact, the provisions of subsection (10) of this section apply instead of this subsection (13).

(a) Before work begins and as needed during the job, a competent person who is capable of identifying asbestos hazards in the workplace and selecting the appropriate control strategy for asbestos exposure, and who has the authority to take prompt corrective measures to eliminate such hazards, must conduct an inspection of the worksite and determine that the roofing material is intact and will likely remain intact.

(b) All employees performing work covered by this subsection (13) must be trained in a training program that meets the requirements of WAC 296-62-07722.

(c) The material must not be sanded, abraded, or ground. When manual methods are used, materials must stay intact.

(d) Material that has been removed from a roof must not be dropped or thrown to the ground. Unless the material is carried or passed to the ground by hand, it must be lowered to the ground via covered, dust-tight chute, crane or hoist. All such material must be removed from the roof as soon as is practicable, but in any event no later than the end of the work shift.

(e) Where roofing products which have been labeled as containing asbestos pursuant to WAC 296-62-07721, installed on nonresidential roofs during operations covered by this subsection (13), the employer must notify the building owner of the presence and location of such materials no later than the end of the job.

(f) All removal or disturbance of pipeline asphaltic wrap must be performed using wet methods.

WAC 296-62-07713 Methods of compliance for asbestos activities in general industry.

(1) Engineering controls and work practices.

(a) The employer must institute engineering controls and work practices to reduce and maintain employee exposure to or below the permissible exposure limits prescribed in WAC 296-62-07705, except to the extent that such controls are not feasible. Engineering controls and work practices include but are not limited to the following:

(i) Local exhaust ventilation equipped with HEPA filter dust collection systems;

(ii) Vacuum cleaners equipped with HEPA filters;

(iii) Enclosure or isolation of processes producing asbestos dust;

(iv) Use of wet methods, wetting agents, or removal encapsulants to control employee exposures during asbestos handling, mixing, removal, cutting, application, and cleanup;

(v) Prompt disposal of wastes contaminated with asbestos in leak-tight containers; or

(vi) Use of work practices or other engineering controls that the director can show to be feasible.

(b) Wherever the feasible engineering controls and work practices that can be instituted are not sufficient to reduce employee exposure to or below the permissible exposure limits prescribed in WAC 296-62-07705, the employer must use them to reduce employee exposure to the lowest levels achievable by these controls and must supplement them by the use of respiratory protection that complies with the requirements of WAC 296-62-07715.

(c) For the following operations, wherever feasible engineering controls and work practices that can be instituted are not sufficient to reduce the employee exposure to or below the permissible exposure limits prescribed in WAC 296-62-07705, the employer must use them to reduce employee exposure to or below 0.5 fiber per cubic centimeter of air (as an eight-hour time-weighted average) or 2.5 fibers per cubic centimeter of air for 30 minutes (short-term exposure), and must supplement them by the use of any combination of respiratory protection that complies with the requirements of WAC 296-62-07715, work practices and feasible engineering controls that will reduce employee exposure to or below the permissible exposure limits prescribed in WAC 296-62-07705: Coupling cutoff in primary asbestos cement pipe manufacturing; sanding in primary and secondary asbestos cement sheet manufacturing; grinding in primary and secondary friction product manufacturing; carding and spinning in dry textile processes; and grinding and sanding in primary plastics manufacturing.

(d) Local exhaust ventilation. Local exhaust HEPA ventilation and dust collection systems must be designed, constructed, installed, and maintained in accordance with good practices such as those found in the American National Standard Fundamentals Governing the Design and Operation of Local Exhaust Systems, ANSI Z9.2-1979.

(e) Particular tools. All hand-operated and power-operated tools which would produce or release fibers of asbestos so as to expose employees to levels in excess of the exposure limits prescribed in WAC 296-62-07705, such as, but not limited to, saws, scorers, abrasive wheels, and drills, must be provided with local exhaust ventilation systems which comply with (d) of this subsection. High-speed abrasive disc saws that are not equipped with appropriate engineering controls must not be used for work related to asbestos.

(f) Wet methods. Asbestos must be handled, mixed, applied, removed, cut, scored, or otherwise worked in a wet saturated state to prevent the emission of airborne fibers unless the usefulness of the product would be diminished thereby.

(g) Particular products and operations. When asbestos cement, mortar, coating, grout, plaster, or similar material containing asbestos is removed from bags, cartons, or other containers in which they are shipped, it must be either wetted, enclosed, or ventilated so as to prevent effectively the release of airborne fibers of asbestos.

(h) Compressed air. Compressed air must not be used to remove asbestos or materials containing asbestos unless the compressed air is used in conjunction with an enclosed ventilation system designed to effectively capture the dust cloud created by the compressed air.

(2) **Compliance program**.

(a) Where either the time weighted average and/or excursion limit is exceeded, the employer must establish and implement a written program to reduce employee exposure to or below the permissible exposure limits by means of engineering and work practice controls as required by subsection (1) of this section, and by the use of respiratory protection where required or permitted under this section.

(b) Such programs must be reviewed and updated as necessary to reflect significant changes in the status of the employer's compliance program.

(c) Written programs must be submitted upon request for examination and copying to the director, affected employees and designated employee representatives.

(d) The employer must not use employee rotation as a means of compliance with the permissible exposure limits specified in WAC 296-62-07705.

(3) **Specific compliance methods for brake and clutch repair**:

(a) Engineering controls and work practices for brake and clutch repair and service. During automotive brake and clutch inspection, disassembly, repair and assembly operations, the employer must institute engineering controls and work practices to reduce employee exposure to materials containing asbestos using a negative pressure enclosure/HEPA vacuum system method or low pressure/wet cleaning method which meets the detailed requirements in WAC 296-62-07745, Appendix F. The employer may also comply using an equivalent method which follows written procedures which the employer demonstrates can achieve results equivalent to Method (1) Negative pressure enclosure/HEPA vacuum system method in WAC 296-62-07745, Appendix F. For facilities in which no more than 5 pair of brakes or 5 clutches are inspected, disassembled, repaired, or assembled per week, (4) Wet method in WAC 296-62-07745, Appendix F may be used instead of Method (1).

(b) The employer may also comply by using an equivalent method which follows written procedures, which the employer demonstrates can achieve equivalent exposure reductions as do the two “preferred methods.” Such demonstration must include monitoring data conducted under workplace conditions closely resembling the process, type of asbestos containing materials, control method, work practices and environmental conditions which the equivalent method will be used, or objective data, which document that under all reasonably foreseeable conditions of brake and clutch repair applications, the method results in exposure which are equivalent to the methods in WAC 296-62-07745, Appendix F.

WAC 296-62-07715 Respiratory protection.

(1) **General**. For employees who use respirators as required by WAC 296-62-077 through 296-62-07747, the employer must provide respirators that comply with the requirements of this section. Respirators must be used during:

(a) Periods necessary to install or implement feasible engineering and work-practice controls;

(b) Work operations, such as maintenance and repair activities, for which engineering and work-practice controls are not feasible;

(c) Work operations for which feasible engineering and work-practice controls are not yet sufficient to reduce employee exposure to or below the permissible exposure limits;

(d) Emergencies;

(e) Work operations in all regulated areas, except for construction activities which follow requirements set forth in WAC 296-62-07715 (1)(g);

(f) Work operations whenever employee exposure exceeds the permissible exposure limits;

(g) The following construction activities:

(i) Class I asbestos work;

(ii) Class II work where the ACM is not removed in a substantially intact state;

(iii) Class II and Class III work which is not performed using wet methods, except for removal of ACM from sloped roofs when a negative-exposure assessment has been made and the ACM is removed in an intact state;

(iv) Class II and Class III asbestos work for which a negative-exposure assessment has not been conducted;

(v) Class III work when TSI or surfacing ACM or PACM is being disturbed;

(vi) Class IV work performed within regulated areas where employees who are performing other work are required to wear respirators.

(2) **Respirator program**.

(a) The employer must develop, implement and maintain a respiratory protection program as required by chapter 296-842 WAC, Respirators, which covers each employee required by this chapter to use a respirator.

(b) Employers must provide an employee with a tight-fitting, powered, air-purifying respirator (PAPR) instead of a negative-pressure respirator selected when an employee chooses to use a PAPR and the respirator provides the required protection to the employee.

(c) The employer must inform any employee required to wear a respirator under this section that the employee may require the employer to provide a tight-fitting, powered, air-purifying respirator (PAPR) instead of a negative-pressure respirator.

(d) No employee must be assigned to tasks requiring the use of respirators if, based on their most recent medical examination, the examining physician determines that the employee will be unable to function normally using a respirator, or that the safety or health of the employee or other employees will be impaired by the use of a respirator. Such employees must be assigned to another job or given the opportunity to transfer to a different position, the duties of which they can perform. If such a transfer position is available, the position must be with the same employer, in the same geographical area, and with the same seniority, status, and rate of pay the employee had just prior to such transfer.

(3) **Respirator selection**. The employer must:

(a) Select and provide to employees appropriate respirators as specified in this section and in WAC 296-842-13005 in the respirator rule.

Make sure filtering facepiece respirators are not selected or used for protection against asbestos fibers.

(b) Provide employees with an air-purifying, half-facepiece respirator, other than a filtering-facepiece respirator, that is equipped with a HEPA filter or an N-, R-, or P-100 series filter whenever the employee performs:

(i) Class II and III asbestos work for which no negative-exposure assessment is available;

(ii) Class III asbestos work involving disturbances of TSI or surfacing ACM or PACM.

(c) Equip any powered air-purifying respirator (PAPR) or negative pressure air-purifying respirator with HEPA filters or N-, R-, or P-100 series filters.

(4) **Special respiratory protection requirements**.

(a) Unless specifically identified in this subsection, respirator selection for asbestos removal, demolition, and renovation operations must be in accordance with the selection specifications of this section and the general selection requirements in WAC 296-842-13005 found in the respirator rule. The employer must provide and require to be worn, at no cost to the employee, a full facepiece supplied-air respirator operated in the pressure demand mode equipped with either an auxiliary positive pressure self-contained breathing apparatus or a HEPA filter egress cartridge, to employees engaged in the following asbestos operations:

(i) Inside negative pressure enclosures used for removal, demolition, and renovation of friable asbestos from walls, ceilings, vessels, ventilation ducts, elevator shafts, and other structural members, but does not include pipes or piping systems; or

(ii) Any dry removal of asbestos.

(b) For all Class I work excluded or not specified in (a)(i) and (ii) of this subsection, when a negative-exposure assessment is not available, and the exposure assessment indicates the exposure level will be at or below 1 f/cc as an 8-hour time weighted average, employers must provide employees with one of the following respirators:

(i) A tight-fitting, powered, air-purifying respirator equipped with high-efficiency filters;

(ii) A full-facepiece supplied-air respirator operated in the pressure-demand mode equipped with either HEPA egress cartridges; or

(iii) An auxiliary positive-pressure, self-contained breathing apparatus.

(c) Whenever the employees are in a regulated area performing Class I asbestos work for which a negative exposure assessment is not available, and an exposure assessment indicates that the exposure level will be above 1 f/cc as an 8-hour TWA, employers must provide a full-facepiece supplied-air respirator operated in the pressure-demand mode equipped with an auxiliary positive-pressure self-contained breathing apparatus.

EXCEPTION:
In lieu of the supplied-air respirator required by subsection (4) of this section, an employer may provide and require to be worn, at no cost to the employee, a full facepiece supplied-air respirator operated in the continuous flow mode equipped with either an auxiliary positive pressure self-contained breathing apparatus or a back-up HEPA filter egress cartridge where daily and historical personal monitoring data indicates the concentration of asbestos fibers is not reasonably expected to exceed 10 f/cc. The continuous flow respirator shall be operated at a minimum air flow rate of six cubic feet per minute at the facepiece using respirable air supplied as required by chapter 296-842 WAC, Respirators.

(5) **Respirator fit testing**.

(a) For each employee wearing negative pressure respirators, employers must perform either quantitative or qualitative face fit tests at the time of initial fitting and at least annually thereafter. The qualitative fit tests may be used only for testing the fit of half-mask respirators where they are permitted to be worn.

(b) Any supplied-air respirator facepiece equipped with a back-up HEPA filter egress cartridge must be quantitatively fit tested (see chapter 296-842 WAC, Respirators.

WAC 296-62-07717 Protective work clothing and equipment.

(1) **Provision and use**. If an employee is exposed to asbestos above the permissible exposure limits, or where the possibility of eye irritation exists, or for which a required negative exposure assessment is not produced and for any employee performing Class I operations, the employer must provide at no cost to the employee and require that the employee uses appropriate protective work clothing and equipment such as, but not limited to:

(a) Coveralls or similar full-body work clothing;

(b) Gloves, head coverings, and foot coverings; and

(c) Face shields, vented goggles, or other appropriate protective equipment which complies with WAC 296-800-160.

(2) **Removal and storage.**

(a) The employer must ensure that employees remove work clothing contaminated with asbestos only in change rooms provided in accordance with WAC 296-62-07719(1).

(b) The employer must ensure that no employee takes contaminated work clothing out of the change room, except those employees authorized to do so for the purpose of laundering, maintenance, or disposal.

(c) Contaminated clothing. Contaminated clothing must be transported in sealed impermeable bags, or other closed, impermeable containers, and be labeled in accordance with WAC 296-62-07721.

(d) The employer must ensure that containers of contaminated protective devices or work clothing which are to be taken out of change rooms or the workplace for cleaning, maintenance, or disposal, bear labels in accordance with WAC 296-62-07721(5).

(3) **Cleaning and replacement**.

(a) The employer must clean, launder, repair, or replace protective clothing and equipment required by this paragraph to maintain their effectiveness. The employer must provide clean protective clothing and equipment at least weekly to each affected employee.

(b) The employer must prohibit the removal of asbestos from protective clothing and equipment by blowing or shaking.

(c) Laundering of contaminated clothing must be done so as to prevent the release of airborne fibers of asbestos in excess of the permissible exposure limits prescribed in WAC 296-62-07705.

(d) Any employer who gives contaminated clothing to another person for laundering must inform such person of the requirement in (c) of this subsection to effectively prevent the release of airborne fibers of asbestos in excess of the permissible exposure limits.

(e) The employer must inform any person who launders or cleans protective clothing or equipment contaminated with asbestos of the potentially harmful effects of exposure to asbestos.

(f) The employer must ensure that contaminated clothing is transported in sealed impermeable bags, or other closed, impermeable containers, and labeled in accordance with WAC 296-62-07721.

(4) **Inspection of protective clothing for construction and shipyard work**.

(a) The competent person must examine work suits worn by employees at least once per workshift for rips or tears that may occur during performance of work.

(b) When rips or tears are detected while an employee is working, rips and tears must be immediately mended, or the worksuit must be immediately replaced.

WAC 296-62-07719 Hygiene facilities and practices.

(1) **Change rooms**.

(a) The employer must provide clean change rooms for employees required to work in regulated areas or required by WAC 296-62-07717(1) to wear protective clothing.

EXCEPTION:
In lieu of the change area requirement specified in this subsection, the employer may permit employees in Class III and Class IV asbestos work, to clean their protective clothing with a portable HEPA-equipped vacuum before such employees leave the area where maintenance was performed.

(b) The employer must ensure that change rooms are in accordance with WAC 296-800-230, and are equipped with two separate lockers or storage facilities, so separated as to prevent contamination of the employee's street clothes from their protective work clothing and equipment.

(2) **Showers**.

(a) The employer must ensure that employees who work in negative pressure enclosures required by WAC 296-62-07712, or who work in areas where their airborne exposure is above the permissible exposure limits prescribed in WAC 296-62-07705, shower at the end of the work shift.

(b) The employer must provide shower facilities which comply with WAC 296-800-230.

(c) The employer must ensure that employees who are required to shower pursuant to (a) of this subsection do not leave the workplace wearing any clothing or equipment worn during the work shift.

(3) Special requirements in addition to the other provisions of WAC 296-62-07719 for construction work defined in WAC 296-155-012 and for all shipyard work defined in WAC 296-304-010.

(a) Requirements for employees performing Class I asbestos jobs involving over 25 linear or 10 square feet of TSI or surfacing ACM and PACM.

(i) Decontamination areas: The employer must establish a decontamination area that is adjacent and connected to the regulated area for the decontamination of such employees. The decontamination area must consist of an equipment room, shower area, and clean room in series. The employer must ensure that employees enter and exit the regulated area through the decontamination area.

(A) Equipment room. The equipment room must be supplied with impermeable, labeled bags and containers for the containment and disposal of contaminated protective equipment.

(B) Shower area. Shower facilities must be provided which comply with WAC 296-800-230, unless the employer can demonstrate that they are not feasible. The showers must be adjacent both to the equipment room and the clean room, unless the employer can demonstrate that this location is not feasible. Where the employer can demonstrate that it is not feasible to locate the shower between the equipment room and the clean room, or where the work is performed outdoors, the employers must ensure that employees:

(I) Remove asbestos contamination from their worksuits in the equipment room using a HEPA vacuum before proceeding to a shower that is not adjacent to the work area; or

(II) Remove their contaminated worksuits in the equipment room, then don clean worksuits, and proceed to a shower that is not adjacent to the work area.

(C) Clean change room. The clean room must be equipped with a locker or appropriate storage container for each employee's use.

(ii) Decontamination area entry procedures. The employer must ensure that employees:

(A) Enter the decontamination area through the clean room;

(B) Remove and deposit street clothing within a locker provided for their use; and

(C) Put on protective clothing and respiratory protection before leaving the clean room.

(D) Before entering the regulated area, the employer must ensure that employees pass through the equipment room.

(iii) Decontamination area exit procedures. The employer must ensure that:

(A) Before leaving the regulated area, employees must remove all gross contamination and debris from their protective clothing;

(B) Employees must remove their protective clothing in the equipment room and deposit the clothing in labeled impermeable bags or containers;

(C) Employees must not remove their respirators in the equipment room;

(D) Employees must shower prior to entering the clean room. When taking a shower, employees must be fully wetted, including the face and hair, prior to removing the respirators;

(E) After showering, employees must enter the clean room before changing into street clothes.

(b) Requirements for Class I work involving less than 25 linear or 10 square feet of TSI or surfacing ACM and PACM, and for Class II and Class III asbestos work operations where exposures exceed a PEL or where there is no negative exposure assessment produced before the operation.

(i) The employer must establish an equipment room or area that is adjacent to the regulated area for the decontamination of employees and their equipment which is contaminated with asbestos which must consist of an area covered by an impermeable drop cloth on the floor or horizontal working surface.

(ii) The area must be of sufficient size as to accommodate cleaning of equipment and removing personal protective equipment without spreading contamination beyond the area (as determined by visible accumulations).

(iii) Work clothing must be cleaned with a HEPA vacuum before it is removed.

(iv) All equipment and surfaces of containers filled with ACM must be cleaned prior to removing them from the equipment room or area.

(v) The employer must ensure that employees enter and exit the regulated area through the equipment room or area.

(c) Requirements for Class IV work. Employers must ensure that employees performing Class IV work within a regulated area comply with hygiene practice required of employees performing work which has a higher classification within that regulated area. Otherwise employers of employees cleaning up debris and material which is TSI or surfacing ACM or identified as PACM must provide decontamination facilities for such employees which are required by WAC 296-62-07719 (3)(b).

(d) Decontamination area for personnel must not be used for the transportation of asbestos debris.

(e) Waste load-out procedure. The waste load-out area as required by WAC 296-62-07723 must be used as an area for final preparation and external decontamination of waste containers, as a short term storage area for bagged waste, and as a port for transporting waste. The employer must ensure waste containers be free of all gross contaminated material before removal from the negative-pressure enclosure. Gross contamination must be wiped, scraped off, or washed off containers before they are placed into a two chamber air lock which is adjacent to the negative-pressure enclosure. In the first chamber, the exterior of the waste container must be decontaminated or placed within a second waste container, and then it must be moved into the second chamber of the air lock for temporary storage or transferred outside of the regulated area. The second waste container must not be reused unless thoroughly decontaminated.

(4) **Lunchrooms**.

(a) The employer must provide lunchroom facilities for employees who work in areas where their airborne exposure is above the time weighted average and/or excursion limit.

(b) The employer must ensure that lunchroom facilities have a positive pressure, filtered air supply, and are readily accessible to employees.

(c) The employer must ensure that employees who work in areas where their airborne exposure is above the time weighted average and/or excursion limit, wash their hands and faces prior to eating, drinking, or smoking.

(d) The employer must ensure that employees do not enter lunchroom facilities with protective work clothing or equipment unless surface asbestos fibers have been removed from the clothing or equipment by vacuuming or other method that removes dust without causing the asbestos to become airborne.

(5) **Smoking in work areas**. The employer must ensure that employees do not smoke in work areas where they are occupationally exposed to asbestos because of activities in that work area.

WAC 296-62-07721 Communication of hazards.

(1) **Communication of hazards to employees**.

(a) Introduction. This section applies to the communication of information concerning asbestos hazards in general industry to facilitate compliance with this standard. Asbestos exposure in general industry occurs in a wide variety of industrial and commercial settings. Employees who manufacture asbestos-containing products may be exposed to asbestos fibers. Employees who repair and replace automotive brakes and clutches may be exposed to asbestos fibers. In addition, employees engaged in housekeeping activities in industrial facilities with asbestos product manufacturing operations, and in public and commercial buildings with installed asbestos-containing materials may be exposed to asbestos fibers. It should be noted that employees who perform housekeeping activities during and after construction activities are covered by asbestos construction work requirements in WAC 296-62-077. Housekeeping employees, regardless of industry designation, should know whether building components they maintain may expose them to asbestos. The same hazard communication provisions will protect employees who perform housekeeping operations in all three asbestos standards; general industry, construction, and shipyard employment. Building owners are often the only and/or best source of information concerning the presence of previously installed asbestos-containing building materials. Therefore they, along with employers of potentially exposed employees, are assigned specific information conveying and retention duties under this section.

(i) Chemical manufacturers, importers, distributors and employers must comply with all requirements of the Hazard Communication Standard (HCS), WAC 296-901-140 for asbestos.

(ii) In classifying the hazards of asbestos at least the following hazards are to be addressed: Cancer and lung effects.

(iii) Employers must include asbestos in the hazard communication program established to comply with the HCS, WAC 296-901-140. Employers must ensure that each employee has access to labels on containers of asbestos and to safety data sheets, and is trained in accordance with the requirements of HCS and WAC 296-62-07722.

(b) Installed asbestos-containing material. Employers and building owners are required to treat installed TSI and sprayed-on and troweled-on surfacing materials as ACM for the purposes of this standard. These materials are designated "presumed ACM or PACM," and are defined in WAC 296-62-07703. Asphalt and vinyl flooring installed no later than 1980 also must be treated as asbestos-containing. The employer or building owner may demonstrate that PACM and flooring materials do not contain asbestos by complying with WAC 296-62-07712 (10)(a)(ix).

(c) Duties of employers and building and facility owners.

(i) Building and facility owners must determine the presence, location, and quantity of ACM and/or PACM at the worksite. Employers and building and facility owners must exercise due diligence in complying with these requirements to inform employers and employees about the presence and location of ACM and PACM.

(ii) Before authorizing or allowing any construction, renovation, remodeling, maintenance, repair, or demolition project, an owner or owner's agent must perform, or cause to be performed, a good faith inspection to determine whether materials to be worked on or removed contain asbestos. The inspection must be documented by a written report maintained on file and made available upon request to the director.

(A) The good faith inspection must be conducted by an accredited inspector.

(B) Such good faith inspection is not required if the owner or owner's agent is reasonably certain that asbestos will not be disturbed by the project or the owner or owner's agent assumes that the suspect material contains asbestos and handles the material in accordance with WAC 296-62-07701 through 296-62-07753.

(iii) The owner or owner's agent must provide, to all contractors submitting a bid to undertake any construction, renovation, remodeling, maintenance, repair, or demolition project, the written statement either of the reasonable certainty of nondisturbance of asbestos or of assumption of the presence of asbestos. Contractors must be provided with the written report before they apply or bid to work.

(iv) Any owner or owner's agent who fails to comply with (c)(ii) and (iii) of this subsection must be subject to a mandatory fine of not less than two hundred fifty dollars for each violation. Each day the violation continues must be considered a separate violation. In addition, any construction, renovation, remodeling, maintenance, repair, or demolition which was started without meeting the requirements of this section must be halted immediately and cannot be resumed before meeting such requirements.

(v) Building and facility owners must inform employers of employees, and employers must inform employees who will perform housekeeping activities in areas which contain ACM and/or PACM of the presence and location of ACM and/or PACM in such areas which may be contacted during such activities.

(vi) Upon written or oral request, building or facility owners must make a copy of the written report required in this section available to the department of labor and industries and the collective bargaining representatives or employee representatives of any employee who may be exposed to any asbestos or asbestos-containing materials. A copy of the written report must be posted conspicuously at the location where employees report to work.

(vii) Building and facility owners must maintain records of all information required to be provided according to this section and/or otherwise known to the building owner concerning the presence, location and quantity of ACM and PACM in the building/facility. Such records must be kept for the duration of ownership and must be transferred to successive owners.

(2) **Communication of hazards to employees**. Requirements for construction and shipyard employment activities.

(a) Introduction. This section applies to the communication of information concerning asbestos hazards in construction and shipyard employment activities. Most asbestos-related construction and shipyard activities involve previously installed building materials. Building/vessel owners often are the only and/or best sources of information concerning them. Therefore, they, along with employers of potentially exposed employees, are assigned specific information conveying and retention duties under this section. Installed Asbestos Containing Building/Vessel Material: Employers and building/vessel owners must identify TSI and sprayed or troweled on surfacing materials as asbestos-containing unless the employer, by complying with WAC 296-62-07721(3) determines it is not asbestos containing. Asphalt or vinyl flooring/decking material installed in buildings or vessels no later than 1980 must also be considered as asbestos containing unless the employer/owner, according to WAC 296-62-07712 (10)(a)(ix) determines it is not asbestos containing. If the employer or building/vessel owner has actual knowledge or should have known, through the exercise of due diligence, that materials other than TSI and sprayed-on or troweled-on surfacing materials are asbestos containing, they must be treated as such. When communicating information to employees according to this standard, owners and employers must identify "PACM" as ACM. Additional requirements relating to communication of asbestos work on multi-employer worksites are set out in WAC 296-62-07706.

(b) Duties of building/vessel and facility owners.

(i) Before work subject to this section is begun, building/vessel and facility owners must identify the presence, location and quantity of ACM, and/or PACM at the work site. All thermal system insulation and sprayed on or troweled on surfacing materials in buildings/vessels or substrates constructed no later than 1980 must be identified as PACM. In addition, resilient flooring/decking material installed no later than 1980 must also be identified as asbestos containing.

(ii) Before authorizing or allowing any construction, renovation, remodeling, maintenance, repair, or demolition project, a building/vessel and facility owner or owner's agent must perform, or cause to be performed, a good faith inspection to determine whether materials to be worked on or removed contain asbestos. The inspection must be documented by a written report maintained on file and made available upon request to the director.

(A) The good faith inspection must be conducted by an accredited inspector.

(B) Such good faith inspection is not required if the building/vessel and facility owner or owner's agent assumes that the suspect material contains asbestos and handles the material in accordance with WAC 296-62-07701 through 296-62-07753 or if the owner or the owner's agent is reasonably certain that asbestos will not be disturbed by the project.

(iii) The building/vessel and facility owner or owner's agent must provide, to all contractors submitting a bid to undertake any construction, renovation, remodeling, maintenance, repair, or demolition project, the written statement either of the reasonable certainty of nondisturbance of asbestos or of assumption of the presence of asbestos. Contractors must be provided the written report before they apply or bid on work.

(iv) Any building/vessel and facility owner or owners agent who fails to comply with WAC 296-62-07721 (2)(b)(ii) and (iii) must be subject to a mandatory fine of not less than two hundred fifty dollars for each violation. Each day the violation continues must be considered a separate violation. In addition, any construction, renovation, remodeling, maintenance, repair, or demolition which was started without meeting the requirements of this section must be halted immediately and cannot be resumed before meeting such requirements.

(v) Upon written or oral request, building/vessel and facility owner or owner's agent must make a copy of the written report required in this section available to the department of labor and industries and the collective bargaining representatives or employee representatives of any employee who may be exposed to any asbestos or asbestos-containing materials. A copy of the written report must be posted conspicuously at the location where employees report to work.

(vi) Building/vessel and facility owner or owner's agent must notify in writing the following persons of the presence, location and quantity of ACM or PACM, at work sites in their buildings/facilities/vessels.

(A) Prospective employers applying or bidding for work whose employees reasonably can be expected to work in or adjacent to areas containing such material;

(B) Employees of the owner who will work in or adjacent to areas containing such material;

(C) On multi-employer worksites, all employers of employees who will be performing work within or adjacent to areas containing such materials;

(D) Tenants who will occupy areas containing such materials.

(c) Duties of employers whose employees perform work subject to this standard in or adjacent to areas containing ACM and PACM. Building/vessel and facility owner or owner's agents whose employees perform such work must comply with these provisions to the extent applicable.

(i) Before work subject to this standard is begun, building/vessel and facility owner or owner's agents must determine the presence, location, and quantity of ACM and/or PACM at the work site according to WAC 296-62-07721 (2)(b).

(ii) Before work under this standard is performed employers of employees who will perform such work must inform the following persons of the location and quantity of ACM and/or PACM present at the work site and the precautions to be taken to insure that airborne asbestos is confined to the area.

(A) Owners of the building/vessel or facility;

(B) Employees who will perform such work and employers of employees who work and/or will be working in adjacent areas;

(iii) Upon written or oral request, a copy of the written report required in this section must be made available to the department of labor and industries and the collective bargaining representatives or employee representatives of any employee who may be exposed to any asbestos or asbestos-containing materials. A copy of the written report must be posted conspicuously at the location where employees report to work.

(iv) Within 10 days of the completion of such work, the employer whose employees have performed work subject to this standard, must inform the building/vessel or facility owner and employers of employees who will be working in the area of the current location and quantity of PACM and/or ACM remaining in the former regulated area and final monitoring results, if any.

(d) In addition to the above requirements, all employers who discover ACM and/or PACM on a work site must convey information concerning the presence, location and quantity of such newly discovered ACM and/or PACM to the owner and to other employers of employees working at the work site, within 24 hours of the discovery.

(e) No contractor may commence any construction, renovation, remodeling, maintenance, repair, or demolition project without receiving a copy of the written response or statement required by WAC 296-62-07721 (2)(b). Any contractor who begins any project without the copy of the written report or statement will be subject to a mandatory fine of not less than two hundred fifty dollars per day. Each day the violation continues will be considered a separate violation.

(3) **Criteria to rebut the designation of installed material as PACM**.

(a) At any time, an employer and/or building/vessel owner may demonstrate, for purposes of this standard, that PACM does not contain asbestos. Building/vessel owners and/or employers are not required to communicate information about the presence of building material for which such a demonstration according to the requirements of (b) of this subsection has been made. However, in all such cases, the information, data and analysis supporting the determination that PACM does not contain asbestos, must be retained according to WAC 296-62-07727.

(b) An employer or owner may demonstrate that PACM does not contain asbestos by the following:

(i) Having a completed inspection conducted according to the requirements of AHERA (40 CFR Part 763, Subpart E) which demonstrates that the material is not ACM;

(ii) Performing tests of the material containing PACM which demonstrate that no asbestos is present in the material. Such tests must include analysis of bulk samples collected in the manner described in 40 CFR 763.86, Asbestos-containing materials in schools. The tests, evaluation and sample collection must be conducted by an accredited inspector. Analysis of samples must be performed by persons or laboratories with proficiency demonstrated by current successful participation in a nationally recognized testing program such as the National Voluntary Laboratory Accreditation Program (NVLAP) of the National Institute for Standards and Technology (NIST) or the Round Robin for bulk samples administered by the American Industrial Hygiene Associate (AIHA), or an equivalent nationally recognized Round Robin testing program.

(4) **Warning signs**.

(a) Warning signs that demarcate the regulated area must be provided and displayed at each location where a regulated area is required to be established by WAC 296-62-07711. Signs must be posted at such a location that an employee may read the signs and take necessary protective steps before entering the area marked by the signs.

(b) Sign specifications:

(i) The warning signs required by (a) of this subsection must bear the following information:

DANGER
ASBESTOS
MAY CAUSE CANCER
CAUSES DAMAGE TO LUNGS
AUTHORIZED PERSONNEL ONLY

(ii) In addition, where the use of respirators and protective clothing is required in the regulated area under this section, the warning signs must include the following:

WEAR RESPIRATORY PROTECTION AND
PROTECTIVE CLOTHING IN THIS AREA

(c) The employer must ensure that employees working in and contiguous to regulated areas comprehend the warning signs required to be posted by (a) of this subsection. Means to ensure employee comprehension may include the use of foreign languages, pictographs, and graphics.

(d) At the entrance to mechanical rooms/areas in which employees reasonably can be expected to enter and which contain TSI or surfacing ACM and PACM, the building/vessel and facility owner or owner's agent must post signs which identify the material which is present, its location, and appropriate work practices which, if followed, will ensure that ACM and/or PACM will not be disturbed. The employer must ensure, to the extent feasible, that employees who come in contact with these signs can comprehend them. Means to ensure employee comprehension may include the use of foreign languages, pictographs, graphics, and awareness training.

(5) **Warning labels**.

(a) Labeling. Labels must be affixed to all raw materials, mixtures, scrap, waste, debris, and other products containing asbestos fibers, or to their containers. When a building owner or employer identifies previously installed ACM and/or PACM, labels or signs must be affixed or posted so that employees will be notified of what materials contain ACM and/or PACM. The employer must attach such labels in areas where they will clearly be noticed by employees who are likely to be exposed, such as at the entrance to mechanical room/areas. Signs required by subsection (1) of this section may be posted in lieu of labels so long as they contain the information required for labeling.

(b) Labels must be printed in large, bold letters on a contrasting background.

(c) Label specifications: In addition to the requirements of subsection (1) of this section, the employer must ensure that labels of bags or containers of protective clothing and equipment, scrap, waste, and debris containing asbestos fibers include the following information:

DANGER
CONTAINS ASBESTOS FIBERS
MAY CAUSE CANCER
CAUSES DAMAGE TO LUNGS
DO NOT BREATHE DUST
AVOID CREATING DUST

(6) The provisions for labels and for safety data sheets required by subsection (1) of this section do not apply where:

(a) Asbestos fibers have been modified by a bonding agent, coating, binder, or other material, provided that the manufacturer can demonstrate that during any reasonably foreseeable use, handling, storage, disposal, processing, or transportation, no airborne concentrations of fibers of asbestos in excess of the excursion limit will be released; or

(b) Asbestos is present in a product in concentrations less than 1.0 percent by weight.

(7) **Safety data sheets**. Employers who are manufacturers or importers of asbestos, or asbestos products must comply with the requirements regarding development of safety data sheets as specified in WAC 296-901-14014, except as provided by subsection (6) of this section.

(8) When a building/vessel owner/or employer identifies previously installed PACM and/or ACM, labels or signs must be affixed or posted so that employees will be notified of what materials contain PACM and/or ACM. The employer must attach such labels in areas where they will clearly be noticed by employees who are likely to be exposed, such as at the entrance to mechanical rooms/areas. Signs required by subsection (4)(a) of this section may be posted in lieu of labels so long as they contain information required for labeling. The employer must ensure, to the extent feasible, that employees who come in contact with these signs can comprehend them. Means to ensure employee comprehension may include the use of foreign languages, pictographs, graphics, and awareness training.

WAC 296-62-07722 Employee information and training.

(1) **Certification**.

(a) Only certified asbestos workers may work on an asbestos project as required in WAC 296-65-010 and 296-65-030.

(b) Only certified asbestos supervisors may supervise asbestos abatement projects as required in WAC 296-65-012 and 296-65-030.

(c) In cases where certification requirements of chapter 296-65 WAC do not apply, all employees must be trained according to the provisions of this section regardless of their exposure levels.

(d) Certification is not required for asbestos work on materials containing less than one percent asbestos.

(2) Training must be provided prior to or at the time of initial assignment, unless the employee has received equivalent training within the previous twelve months, and at least annually thereafter.

(3) **Asbestos projects**.

(a) Class I work must be considered an asbestos project. Only certified asbestos workers may do this work.

(b) Only certified workers may conduct Class II asbestos work that is considered an asbestos project.

(i) The following Class II asbestos work must be considered asbestos projects:

(A) All Class II asbestos work where critical barriers, equivalent isolation methods, or negative pressure enclosures are required; or

(B) All Class II asbestos work where asbestos containing materials do not stay intact (including removal of vinyl asbestos floor (VAT) or roofing materials by mechanical methods such as chipping, grinding, or sanding).

(ii) The following Class II asbestos work is not considered an asbestos project and is excluded from asbestos worker certification:

(A) All Class II asbestos work involving intact asbestos containing materials (for example, intact roofing materials, bituminous or asphalt pipeline coatings, and intact flooring/decking materials);

(B) All Class II asbestos work of less than one square foot of asbestos containing materials; or

(C) All Class II asbestos work involving asbestos-cement water pipe when the work is done in accordance with training approved by the department through the asbestos certification program (see WAC 296-65-015(4)).

(iii) Asbestos work involving the removal of one square foot or more of intact roofing materials by mechanical sawing or heavy equipment must meet the following requirements:

(A) Only certified asbestos workers may conduct mechanical sawing of intact roofing material;

(B) Noncertified asbestos workers may handle roofing dust, material and debris;

(C) Operators of heavy equipment (such as track hoes with clam shells and excavators) do not need to be certified asbestos workers in the removal or demolition of intact roofing materials.

(c) Only certified asbestos workers may conduct all Class III and Class IV asbestos work that is considered an asbestos project.

(i) The following asbestos work is considered an asbestos project:

(A) All Class III asbestos work where one square foot or more of asbestos containing materials that do not stay intact;

(B) All Class IV asbestos work where one square foot or more of asbestos containing materials that do not stay intact; or

(C) All Class III and Class IV asbestos work with pipe insulation.

(ii) Except for a project involving pipe insulation work, any project involving only Class III or Class IV asbestos work with less than one square foot of asbestos containing materials is not considered an asbestos project.

(4) Training requirements for asbestos work that is not considered an asbestos project or is excluded from asbestos worker certification.

(a) Class II asbestos work.

(i) Employers must provide eight-hours of training to employees who perform asbestos work on one generic category of asbestos containing materials (ACM). When performing asbestos work in more than one category of asbestos containing materials, additional training must be used to supplement the first eight hour training course.

(ii) The training course must include:

(A) Hands-on training that applies to the category of asbestos containing materials;

(B) Specific work practices and engineering controls related to the category of asbestos containing materials present as specified in WAC 296-62-07712; and

(C) All the minimum elements of subsection (5) of this section.

(b) Class III asbestos work (maintenance and custodial work in buildings containing asbestos containing materials).

(i) Employers must provide training with curriculum and training methods equivalent to the 16-hour operations and maintenance course developed by the EPA. (See 40 CFR 763.92(a)(2).) For those employees whose only affected work is Class II work as described in subsection (4)(a)(i) of this section, employers must meet this 16-hour training requirement or provide training that meets the eight hours Class II requirements in subsection (4)(a) of this section.

(ii) Sixteen hours of training must include:

(A) Hands-on training in the use of respiratory protection and work practices, and

(B) All the minimum elements of subsection (5) of this section.

(c) Class IV asbestos work (maintenance and custodial work in buildings containing asbestos-containing materials).

(i) Employers must provide at least two hours of training with curriculum and training methods equivalent to the awareness training course developed by the EPA.

(ii) Training must include:

(A) Available information concerning the location of PACM, ACM, asbestos-containing flooring materials or flooring materials where the absence of asbestos has not been certified;

(B) Instruction on how to recognize damaged, deteriorated, and delimitation of asbestos containing building materials; and

(C) All of the minimum elements of subsection (5) of this section.

(5) The training program must be conducted in a manner which the employee is able to understand. The employer must ensure that each employee is informed of the following:

(a) The health effects associated with asbestos exposure;

(b) The relationship between smoking and exposure to asbestos producing lung cancer;

(c) Methods of recognizing asbestos and quantity, location, manner of use, release (including the requirements of WAC 296-62-07721 (1)(c) and (2)(b) to presume certain building materials contain asbestos), and storage of asbestos and the specific nature of operations which could result in exposure to asbestos;

(d) The engineering controls and work practices associated with the employee's job assignment;

(e) The specific procedures implemented to protect employees from exposure to asbestos, such as appropriate work practices, housekeeping procedures, hygiene facilities, decontamination procedures, emergency and clean-up procedures (including where Class III and IV work is performed, the contents “Managing Asbestos In Place” (EPA 20T-2003, July 1990) or its equivalent in content), personal protective equipment to be used, waste disposal procedures, and any necessary instructions in the use of these controls and procedures;

(f) The purpose, proper use, and limitations of protective clothing;

(g) The purpose and a description of the medical surveillance program required by WAC 296-62-07725;

(h) The content of this standard, including appendices;

(i) The names, addresses and phone numbers of public health organizations which provide information, materials, and/or conduct programs concerning smoking cessation. The employer may distribute the list of such organizations contained in Appendix I, to comply with this requirement;

(j) The requirements for posting signs and affixing labels and the meaning of the required legends for such signs and labels; and

(k) The purpose, proper use, limitations, and other training requirements for respiratory protection as required by chapter 296-842 WAC, (see WAC 296-842-11005, 296-842-16005, and 296-842-19005.

(6) The employer must also provide, at no cost to employees who perform housekeeping operations in a facility which contains ACM or PACM, an asbestos awareness training course to all employees who are or will work in areas where ACM and/or PACM is present who work in buildings containing asbestos-containing materials, which must, at a minimum, contain the following elements:

(a) Health effects of asbestos;

(b) Locations of ACM and PACM in the building/facility;

(c) Recognition of ACM and PACM damage and deterioration;

(d) Requirements in this standard relating to housekeeping, and

(e) Proper response to fiber release episodes.

Each such employee must be so trained at least once a year.

(7) **Access to information and training materials**.

(a) The employer must make a copy of this standard and its appendices readily available without cost to all affected employees.

(b) The employer must provide, upon request, all materials relating to the employee information and training program to the director.

(c) The employer must inform all employees concerning the availability of self-help smoking cessation program material. Upon employee request, the employer must distribute such material, consisting of NIH Publication No. 89-1647, or equivalent self-help material, which is approved or published by a public health organization listed in Appendix I, WAC 296-62-07751.

WAC 296-62-07723 Housekeeping.

(1) All surfaces must be maintained as free as practicable of accumulations of dusts and waste containing asbestos.

(2) All spills and sudden releases of material containing asbestos must be cleaned up as soon as possible.

(3) Surfaces contaminated with asbestos may not be cleaned by the use of compressed air.

(4) **Vacuuming**. HEPA-filtered vacuuming equipment must be used for vacuuming. The equipment must be used and emptied in a manner which minimizes the reentry of asbestos into the workplace.

(5) **Shoveling**, dry sweeping, and dry clean-up of asbestos may be used only where vacuuming and/or wet cleaning are not feasible.

(6) **Waste disposal**. Waste, scrap, debris, bags, containers, equipment, and clothing contaminated with asbestos consigned for disposal, must be collected and disposed of in sealed impermeable bags, or other closed, impermeable containers. To avoid breakage, bags must be at least six mils in thickness and must not be dragged or slid across rough or abrasive surfaces.

(7) **Waste removal**. Whenever a negative-pressure enclosure is required by WAC 296-62-07712, the employer wherever feasible, must establish a waste-load-out area that is adjacent and connected to the negative-pressure enclosure, constructed of a two chamber air lock, for the decontamination and removal of asbestos debris.

(8) **Deterioration**. Asbestos and asbestos containing material which has become damaged or deteriorated must be repaired, enclosed, encapsulated, or removed.

(9) **Care of asbestos-containing flooring/decking material**.

(a) Sanding of asbestos-containing floor/deck material is prohibited.

(b) Stripping of finishes must be conducted using low abrasion pads at speeds lower than 300 rpm and wet methods.

(c) Burnishing or dry buffing may be performed only on asbestos-containing flooring/decking which has sufficient finish so that the pad cannot contact the asbestos-containing material.

(d) Dust and debris in an area containing TSI or surfacing ACM/PACM or visibly deteriorated ACM, must not be dusted or swept dry, or vacuumed without using a HEPA filter.

(10) Waste and debris and accompanying dust in an area containing accessible thermal system insulation or surfacing material or visibly deteriorated ACM:

(a) Must not be dusted or swept dry, or vacuumed without using a HEPA filter;

(b) Must be promptly cleaned up and disposed of in leak tight containers.

WAC 296-62-07725 Medical surveillance.

(1) **General**.

(a) Employees covered. The employer must institute a medical surveillance program for all employees who are or will be exposed to airborne concentrations of fibers of asbestos at or above the permissible exposure limits. **Exception**. Employers in the construction or shipyard industries must institute a medical surveillance program for all employees who for a combined total of 30 or more days per year are engaged in Class I, II, and III work, or are exposed at or above the permissible exposure limit for combined 30 days or more per year; or who are required by the standard to wear negative pressure respirators. For the purpose of this subsection, any day in which an employee engaged in Class II or III work or a combination thereof for one hour or less (taking into account the entire time spent on the removal operation, including cleanup), and, while doing so adheres to the work practices specified in this standard, shall not be counted.

(b) Examination by a physician.

(i) The employer must ensure that all medical examinations and procedures are performed by or under the supervision of a licensed physician, and must be provided without cost to the employee and at a reasonable time and place.

(ii) Persons other than licensed physicians, who administer the pulmonary function testing required by this section, must complete a training course in spirometry sponsored by an appropriate academic or professional institution.

(2) **Preplacement examinations**.

(a) Except as provided by WAC 296-62-07725 (1)(a), before an employee is assigned to an occupation exposed to airborne concentrations of asbestos, a preplacement medical examination must be provided or made available by the employer. Examinations administered using the thirty or more days per year criteria of WAC 296-62-07725 (1)(a) must be given within ten working days following the thirtieth day of exposure. Examinations must be given prior to assignment of employees to areas where negative-pressure respirators are worn.

All examinations must include, as a minimum, a medical and work history: A complete physical examination of all systems with special emphasis on the pulmonary, cardiovascular, and gastrointestinal systems; completion of the respiratory disease standardized questionnaire in WAC 296-62-07741, Appendix D, Part 1; a chest roentgenogram (posterior-anterior 14x17 inches); pulmonary function tests to include forced vital capacity (FVC) and forced expiratory volume at 1 second (FEV1.0); and any additional tests deemed appropriate by the examining physician. Interpretation and classification of chest roentgenograms must be conducted in accordance with WAC 296-62-07743, Appendix E.

(3) **Periodic examinations**.

(a) Periodic medical examinations must be made available annually.

(b) The scope of the medical examination must be in conformance with the protocol established in subsection (2)(b) of this section, except that the frequency of chest roentgenograms must be conducted in accordance with Table 2 of this section, and the abbreviated standardized questionnaire contained in WAC 296-62-07741, Appendix D, Part 2, must be administered to the employee.

Table 2—Frequency of Chest Roentgenograms

Year since first exposure	Age of employee		
	15 to 35	**35+ to 45**	**45+**
0 to 10	Every 5 years	Every 5 years	Every 5 years
10+	Every 5 years	Every 2 years	Every 1 year

(c) If the examining physician determines that any of the examinations should be provided more frequently than specified, the employer must provide such examinations to affected employees at the frequencies specified by the physician.

(4) **Termination of employment examinations**.

(a) The employer must provide, or make available, a termination of employment medical examination for any employee who has been exposed to airborne concentrations of fibers of asbestos at or above the permissible exposure limits.

(b) The medical examination must be in accordance with the requirements of the periodic examinations stipulated in subsection (3) of this section, and must be given within thirty calendar days before or after the date of termination of employment.

(5) **Recent examinations**. No medical examination is required of any employee, if adequate records show that the employee has been examined in accordance with subsection (2), (3), or (4) of this section within the past one-year period.

(6) **Information provided to the physician**. The employer must provide the following information to the examining physician:

(a) A copy of this standard and Appendices D, E, and H of WAC 296-62-07741, 296-62-07743, and 296-62-07749 respectively.

(b) A description of the affected employee's duties as they relate to the employee's exposure.

(c) The employee's representative exposure level or anticipated exposure level.

(d) A description of any personal protective and respiratory equipment used or to be used.

(e) Information from previous medical examinations of the affected employee that is not otherwise available to the examining physician.

(7) **Physician's written opinion**.

(a) The employer must obtain a written opinion from the examining physician. This written opinion must contain the results of the medical examination and must include:

(i) The physician's opinion as to whether the employee has any detected medical conditions that would place the employee at an increased risk of material health impairment from exposure to asbestos;

(ii) Any recommended limitations on the employee or upon the use of personal protective equipment such as clothing or respirators;

(iii) A statement that the employee has been informed by the physician of the results of the medical examination and of any medical conditions resulting from asbestos exposure that require further explanation or treatment; and

(iv) A statement that the employee has been informed by the physician of the increased risk of lung cancer attributable to the combined effect of smoking and asbestos exposure.

(b) The employer must instruct the physician not to reveal in the written opinion given to the employer specific findings or diagnoses unrelated to occupational exposure to asbestos.

(c) The employer must provide a copy of the physician's written opinion to the affected employee within thirty days from its receipt.

WAC 296-62-07727 Recordkeeping.

(1) **Exposure measurements.**

(a) The employer must keep an accurate record of all measurements taken to monitor employee exposure to asbestos as prescribed in WAC 296-62-07709.

(b) This record must include at least the following information:

(i) Name of employer;

(ii) Name of person conducting monitoring;

(iii) The date of measurement;

(iv) Address of operation or activity;

(v) Description of the operation or activity involving exposure to asbestos that is being monitored;

(vi) Personal or area sample;

(vii) Name, Social Security number, and exposure level of the employees whose exposures are represented;

(viii) Type of protective devices worn, if any;

(ix) Pump calibration date and flow rate;

(x) Total volume of air sampled;

(xi) Name and address of analytical laboratory;

(xii) Number, duration, and results (f/cc) of samples taken;

(xiii) Date of analysis; and

(xiv) Sampling and analytical methods used and evidence of their accuracy.

(c) The employer must maintain this record for the duration of employment plus thirty years, in accordance with chapter 296-802 WAC.

(2) **Objective data for exempted operations**.

(a) Where the processing, use, or handling of products made from or containing asbestos is exempted from other requirements of this section under WAC 296-62-07709 (2)(a)(iii) and (3)(b)(i), the employer must establish and maintain an accurate record of objective data reasonably relied upon in support of the exemption.

(b) The record must include at least the following:

(i) The product qualifying for exemption;

(ii) The source of the objective data;

(iii) The testing protocol, results of testing, and/or analysis of the material for the release of asbestos;

(iv) A description of the operation exempted and how the data support the exemption; and

(v) Other data relevant to the operations, materials, processing, or employee exposures covered by the exemption.

(c) The employer must maintain this record for the duration of the employer's reliance upon such objective data.

> *Note: The employer may utilize the services of competent organizations such as industry trade associations and employee associations to maintain the records required by this section.*

(3) **Medical surveillance.**

(a) The employer must establish and maintain an accurate record for each employee subject to medical surveillance by WAC 296-62-07725 (1)(a), in accordance with chapter 296-802 WAC.

(b) The record must include at least the following information:

(i) The name and Social Security number of the employee;

(ii) Physician's written opinions;

(iii) Any employee medical complaints related to exposure to asbestos;

(iv) A copy of the information provided to the physician as required by WAC 296-62-07725(6); and

(v) A copy of the employee's medical examination results, including the medical history, questionnaire responses, results of any tests, and physicians recommendations.

(c) The employer must ensure that this record is maintained for the duration of employment plus thirty years, in accordance with chapter 296-802 WAC.

(4) **Training**. The employer must maintain all employee training records for one year beyond the last date of employment of that employee.

(5) **Availability**.

(a) The employer, upon written request, must make all records required to be maintained by this section available to the director for examination and copying.

(b) The employer, upon request, must make any exposure records required by subsection (1) of this section available for examination and copying to affected employees, former employees, designated representatives, and the director, in accordance with chapter 296-802 WAC.

(c) The employer, upon request, must make employee medical records required by subsection (2) of this section available for examination and copying to the subject employee, to anyone having the specific written consent of the subject employee, and the director, in accordance with chapter 296-802 WAC.

(6) **Transfer of records**.

(a) The employer must comply with the requirements concerning transfer of records set forth in chapter 296-802 WAC.

(b) Whenever the employer ceases to do business and there is no successor employer to receive and retain the records for the prescribed period, the employer must notify the director at least ninety days prior to disposal of records and, upon request, transmit them to the director.

(7) **Data to rebut PACM**. Where the building owner and employer have relied on data to demonstrate that PACM is not asbestos-containing, such data must be maintained for as long as they are relied upon to rebut the presumption.

(8) **Records of required notifications**. Where the building owner has communicated and received information concerning the identification, location and quantity of ACM and PACM, written records of such notifications and their content must be maintained by the building owner for the duration of ownership and must be transferred to successive owners of such buildings/facilities.

WAC 296-62-07728 Competent person.

(1) **General**. For all construction and shipyard work covered by this standard, the employer must designate a competent person, having the qualifications and authorities for ensuring worker safety and health as required by chapter 296-155 WAC.

(2) **Required inspections by the competent person**. WAC 296-155-110(9) which requires health and safety prevention programs to provide for frequent and regular inspections on the job sites, materials, and equipment to be made by the competent person, is incorporated.

(3) **Additional inspections**. In addition, the competent person must make frequent and regular inspections of the job sites in order to perform the duties set out below in this section. For Class I jobs, on-site inspections must be made at least once during each work shift, and at any time at employee request. For Class II and III jobs, on-site inspections must be made at intervals sufficient to assess whether conditions have changed, and at any reasonable time at employee request.

(4) On all worksites where employees are engaged in Class I or II asbestos work, the competent person designated in accordance with WAC 296-62-07712 must perform or supervise the following duties, as applicable:

(a) Set up the regulated area, enclosure, or other containment;

(b) Ensure (by on-site inspection) the integrity of the enclosure or containment;

(c) Set up procedures to control entry and exit from the enclosure and/or area;

(d) Supervise all employee exposure monitoring required by this section and ensure that it is conducted as required by WAC 296-62-07709;

(e) Ensure that employees working within the enclosure and/or using glovebags wear protective clothing and respirators as required by WAC 296-62-07715 and 296-62-07717;

(f) Ensure through on-site supervision, that employees set up and remove engineering controls, use work practices and personal protective equipment in compliance with all requirements;

(g) Ensure that employees use the hygiene facilities and observe the decontamination procedures specified in WAC 296-62-07719;

(h) Ensure that through on-site inspection engineering controls are functioning properly and employees are using proper work practices; and

(i) Ensure that notification requirements in WAC 296-62-07721 are met.

(5) **Training for competent person**.

(a) For Class I and II asbestos work the competent person must be trained in all aspects of asbestos removal and handling, including:

(i) Abatement;

(ii) Installation;

(iii) Removal and handling;

(iv) The contents of this standard;

(v) The identification of asbestos;

(vi) Removal procedures where appropriate; and

(vii) Other practices for reducing the hazard.

Such training must be the certified asbestos supervisor training specified in WAC 296-65-003, 296-65-012, and 296-65-030.

(b) For Class III and IV asbestos work:

(i) The competent person must be certified as an asbestos supervisor as prescribed in WAC 296-65-012 and 296-65-030 for Class III and IV work involving an asbestos project of 3 square feet or 3 linear feet or more of asbestos containing material.

(ii) For Class III and IV asbestos work involving less than 3 square feet or 3 linear feet of asbestos containing material, the competent person must be trained in:

(A) Aspects of asbestos handling appropriate for the nature of the work, to include procedures for setting up glove bags and mini-enclosures;

(B) Practices for reducing asbestos exposures;

(C) Use of wet methods;

(D) The contents of this standard; and

(E) The identification of asbestos.

Such training must include successful completion of a course equivalent in curriculum and training method to the 16-hour Operations and Maintenance course developed by EPA for maintenance and custodial workers (see 40 CFR 763.92 (a)(2)) or its equivalent in stringency, content and length.

WAC 296-62-07733 Appendices.

(1) Appendices A, D, E, and F to this part are incorporated as part of this section and the contents of these appendices are mandatory.

(2) Appendices B, G, H, I, J and K to this part are informational and are not intended to create any additional obligations not otherwise imposed or to detract from any existing obligations.

WAC 296-62-07735 Appendix A--WISHA reference method--Mandatory.

This mandatory appendix specifies the procedure for analyzing air samples for asbestos, tremolite, anthophyllite, and actinolite and specifies quality control procedures that must be implemented by laboratories performing the analysis. The sampling and analytical methods described below represent the elements of the available monitoring methods (such as Appendix B to this section, the most current version of the WISHA method ID-60, or the most current version of the NIOSH 7400 method) which WISHA considers to be essential to achieve adequate employee exposure monitoring while allowing employers to use methods that are already established within their organizations. All employers who are required to conduct air monitoring under WAC 296-62-07709 are required to utilize analytical laboratories that use this procedure, or an equivalent method, for collecting and analyzing samples.

(1) **Sampling and analytical procedure**.

(a) The sampling medium for air samples must be mixed cellulose ester filter membranes. These must be designated by the manufacturer as suitable for asbestos, tremolite, anthophyllite, and actinolite counting. See below for rejection of blanks.

(b) The preferred collection device is the 25-mm diameter cassette with an open-faced 50-mm electrically conductive extension cowl. The 37-mm cassette may be used if necessary but only if written justification for the need to use the 37-mm filter cassette accompanies the sample results in the employee's exposure monitoring record. Do not reuse or reload cassettes for asbestos sample collection.

(c) An air flow rate between 0.5 liter/min and 4.0 liters/min must be selected for the 25-mm cassette. If the 37-mm cassette is used, an air flow rate between 1 liter/min and 4.0 liters/min must be selected.

(d) Where possible, a sufficient air volume for each air sample must be collected to yield between one hundred and one thousand three hundred fibers per square millimeter on the membrane filter. If a filter darkens in appearance or if loose dust is seen on the filter, a second sample must be started.

(e) Ship the samples in a rigid container with sufficient packing material to prevent dislodging the collected fibers. Packing material that has a high electrostatic charge on its surface (e.g., expanded polystyrene) cannot be used because such material can cause loss of fibers to the sides of the cassette.

(f) Calibrate each personal sampling pump before and after use with a representative filter cassette installed between the pump and the calibration devices.

(g) Personal samples must be taken in the "breathing zone" of the employee (i.e., attached to or near the collar or lapel near the worker's face).

(h) Fiber counts must be made by positive phase contrast using a microscope with an 8 to 10 X eyepiece and a 40 to 45 X objective for a total magnification of approximately 400 X and a numerical aperture of 0.65 to 0.75. The microscope must also be fitted with a green or blue filter.

(i) The microscope must be fitted with a Walton-Beckett eyepiece graticule calibrated for a field diameter of one hundred micrometers (+/-2 micrometers).

(j) The phase-shift detection limit of the microscope must be about 3 degrees measured using the HSE phase shift test slide as outlined below.

(i) Place the test slide on the microscope stage and center it under the phase objective.

(ii) Bring the blocks of grooved lines into focus.

Note: The slide consists of seven sets of grooved lines (ca. 20 grooves to each block) in descending order of visibility from sets one to seven, seven being the least visible. The requirements for asbestos, tremolite, anthophyllite, and actinolite counting are that the microscope optics must resolve the grooved lines in set three completely, although they may appear somewhat faint, and that the grooved lines in sets six and seven must be invisible. Sets four and five must be at least partially visible but may vary slightly in visibility between microscopes. A microscope that fails to meet these requirements has either too low or too high a resolution to be used for asbestos, tremolite, anthophyllite, and actinolite counting.

(iii) If the image deteriorates, clean and adjust the microscope optics. If the problem persists, consult the microscope manufacturer.

(k) Each set of samples taken will include ten percent blanks or a minimum of two blanks. These blanks must come from the same lot as the filters used for sample collection. The field blank results must be averaged and subtracted from the analytical results before reporting. Any samples represented by a blank having a fiber count in excess of the detection limit of the method being used must be rejected.

(l) The samples must be mounted by the acetone/triacetin method or a method with an equivalent index of refraction and similar clarity.

(m) Observe the following counting rules.

(i) Count only fibers equal to or longer than five micrometers. Measure the length of curved fibers along the curve.

(ii) Count all particles as asbestos, tremolite, anthophyllite, and actinolite that have a length-to-width ratio (aspect ratio) of three to one or greater.

(iii) Fibers lying entirely within the boundary of the Walton-Beckett graticule field must receive a count of one. Fibers crossing the boundary once, having one end within the circle, must receive the count of one-half. Do not count any fiber that crosses the graticule boundary more than once. Reject and do not count any other fibers even though they may be visible outside the graticule area.

(iv) Count bundles of fibers as one fiber unless individual fibers can be identified by observing both ends of an individual fiber.

(v) Count enough graticule fields to yield 100 fibers. Count a minimum of 20 fields; stop counting at 100 fields regardless of fiber count.

(n) Blind recounts must be conducted at the rate of ten percent.

(2) **Quality control procedures**.

(a) Intralaboratory program. Each laboratory and/or each company with more than one microscopist counting slides must establish a statistically designed quality assurance program involving blind recounts and comparisons between microscopists to monitor the variability of counting by each microscopist and between microscopists. In a company with more than one laboratory, the program must include all laboratories and must also evaluate the laboratory-to-laboratory variability.

(b) Interlaboratory program.

(i) Each laboratory analyzing asbestos, tremolite, anthophyllite, and actinolite samples for compliance determination must implement an interlaboratory quality assurance program that as a minimum includes participation of at least two other independent laboratories. Each laboratory must participate in round robin testing at least once every six months with at least all the other laboratories in its interlaboratory quality assurance group. Each laboratory must submit slides typical of its own work load for use in this program. The round robin must be designed and results analyzed using appropriate statistical methodology.

(ii) All laboratories should participate in a national sample testing scheme such as the Proficiency Analytical Testing Program (PAT), the Asbestos Registry sponsored by the American Industrial Hygiene Association (AIHA).

(c) All individuals performing asbestos, tremolite, anthophyllite, and actinolite analysis must have taken the NIOSH course for sampling and evaluating airborne asbestos, tremolite, anthophyllite, and actinolite dust or an equivalent course, recognized by the department.

(d) When the use of different microscopes contributes to differences between counters and laboratories, the effect of the different microscope must be evaluated and the microscope must be replaced, as necessary.

(e) Current results of these quality assurance programs must be posted in each laboratory to keep the microscopists informed.

WAC 296-62-07737 Appendix B--Detailed procedure for asbestos sampling and analysis--Nonmandatory.

Air Matrix:

WISHA Permissible Exposure Limits:

Time Weighted Average	0.1 fiber/cc
Excursion Level (30 minutes)	1.0 fiber/cc

Collection Procedure:

A known volume of air is drawn through a 25-mm diameter cassette containing a mixed-cellulose ester filter. The cassette must be equipped with an electrically conductive 50-mm extension cowl. The sampling time and rate are chosen to give a fiber density of between 100 to 1,300 fibers/mm^2 on the filter.

Recommended Sampling Rate 0.5 to 4.0 liters/minute (L/min)

Recommended Air Volumes:

Minimum	25 L
Maximum	2,400 L

Analytical Procedure: A portion of the sample filter is cleared and prepared for asbestos fiber counting by Phase Contrast Microscopy (PCM) at 400X. Commercial manufacturers and products mentioned in this method are for descriptive use only and do not constitute endorsements by WISHA. Similar products from other sources can be substituted.

Introduction.

This method describes the collection of airborne asbestos fibers using calibrated sampling pumps with mixed-cellulose ester (MCE) filters and analysis by phase contrast microscopy (PCM). Some terms used are unique to this method and are defined below:

Asbestos: A term for naturally occurring fibrous minerals. Asbestos includes chrysotile, crocidolite, amosite (cummingtonite-grunerite asbestos), tremolite asbestos, actinolite asbestos, anthophyllite asbestos, and any of these minerals that have been chemically treated and/or altered. The precise chemical formulation of each species will vary with the location from which it was mined. Nominal compositions are listed:

Chrysotile	$Mg_3Si_2O_5(OH)_4$
Crocidolite	$Na_2Fe_3^{2}+Fe_2^{3}+Si_8O_{22}(OH)_2$
Amosite	$(Mg,Fe)_7Si_8O_{22}(OH)_2$
Tremolite-actinolite	$Ca_2(Mg,Fe)_5Si_8O_{22}(OH)_2$
Anthophyllite	$(Mg,Fe)_7Si_8O_{22}(OH)_2$

Asbestos Fiber: A fiber of asbestos which meets the criteria specified below for a fiber.

Aspect Ratio: The ratio of the length of a fiber to it is diameter (e.g. 3:1, 5:1 aspect ratios).

Cleavage Fragments: Mineral particles formed by comminution of minerals, especially those characterized by parallel sides and a moderate aspect ratio (usually less than 20:1).

Detection Limit: The number of fibers necessary to be 95% certain that the result is greater than zero.

Differential Counting: The term applied to the practice of excluding certain kinds of fibers from the fiber count because they do not appear to be asbestos.

Fiber: A particle that is 5 µm or longer, with a length-to-width ratio of 3 to 1 or longer.

Field: The area within the graticule circle that is superimposed on the microscope image.

Set: The samples which are taken, submitted to the laboratory, analyzed, and for which, interim or final result reports are generated.

Tremolite, Anthophyllite, and Actinolite: The non-asbestos form of these minerals which meet the definition of a fiber. It includes any of these minerals that have been chemically treated and/or altered.

Walton-Beckett Graticule: An eyepiece graticule specifically designed for asbestos fiber counting. It consists of a circle with a projected diameter of 100 ±2 µm (area of about 0.00785 mm^2) with a crosshair having tic-marks at 3-µm intervals in one direction and 5-µm in the orthogonal direction. There are marks around the periphery of the circle to demonstrate the proper sizes and shapes of fibers. The disk is placed in one of the microscope eyepieces so that the design is superimposed on the field of view.

1. **History.**

(a) Early surveys to determine asbestos exposures were conducted using impinger counts of total dust with the counts expressed as million particles per cubic foot. The British Asbestos Research Council recommended filter membrane counting in 1969. In July 1969, the Bureau of Occupational Safety and Health published a filter membrane method for counting asbestos fibers in the United States. This method was refined by NIOSH and published as P & CAM 239. On May 29, 1971, OSHA specified filter membrane sampling with phase contrast counting for evaluation of asbestos exposures at work sites in the United States. The use of this technique was again required by OSHA in 1986. Phase contrast microscopy has continued to be the method of choice for the measurement of occupational exposure to asbestos.

(b) Principle. Air is drawn through a MCE filter to capture airborne asbestos fibers. A wedge shaped portion of the filter is removed, placed on a glass microscope slide and made transparent. A measured area (field) is viewed by PCM. All the fibers meeting a defined criteria for asbestos are counted and considered a measure of the airborne asbestos concentration.

(c) Advantages and Disadvantages

(i) There are four main advantages of PCM over other methods:

(A) The technique is specific for fibers. Phase contrast is a fiber counting technique which excludes non-fibrous particles from the analysis.

(B) The technique is inexpensive and does not require specialized knowledge to carry out the analysis for total fiber counts.

(C) The analysis is quick and can be performed on-site for rapid determination of air concentrations of asbestos fibers.

(D) The technique has continuity with historical epidemiological studies so that estimates of expected disease can be inferred from long-term determinations of asbestos exposures.

(ii) The main disadvantage of PCM is that it does not positively identify asbestos fibers. Other fibers which are not asbestos may be included in the count unless differential counting is performed. This requires a great deal of experience to adequately differentiate asbestos from non-asbestos fibers.

Positive identification of asbestos must be performed by polarized light or electron microscopy techniques. A further disadvantage of PCM is that the smallest visible fibers are about 0.2 µm in diameter while the finest asbestos fibers may be as small as 0.02 µm in diameter. For some exposures, substantially more fibers may be present than are actually counted.

(d) Workplace Exposure. Asbestos is used by the construction industry in such products as shingles, floor tiles, asbestos cement, roofing felts, insulation and acoustical products. Non-construction uses include brakes, clutch facings, paper, paints, plastics, and fabrics. One of the most significant exposures in the workplace is the removal and encapsulation of asbestos in schools, public buildings, and homes. Many workers have the potential to be exposed to asbestos during these operations. About 95% of the asbestos in commercial use in the United States is chrysotile. Crocidolite and amosite make up most of the remainder. Anthophyllite and tremolite or actinolite are likely to be encountered as contaminants in various industrial products.

(e) Physical Properties. Asbestos fiber possesses a high tensile strength along its axis, is chemically inert, non-combustible, and heat resistant. It has a high electrical resistance and good sound absorbing properties. It can be weaved into cables, fabrics or other textiles, and also matted into asbestos papers, felts, or mats.

2. **Range and Detection Limit**.

(a) The ideal counting range on the filter is 100 to 1,300 fibers/mm^2. With a Walton-Beckett graticule this range is equivalent to 0.8 to 10 fibers/field. Using NIOSH counting statistics, a count of 0.8 fibers/field would give an approximate coefficient of variation (CV) of 0.13.

(b) The detection limit for this method is 4.0 fibers per 100 fields or 5.5 fibers/mm^2. This was determined using an equation to estimate the maximum CV possible at a specific concentration (95% confidence) and a Lower Control Limit of zero. The CV value was then used to determine a corresponding concentration from historical CV vs fiber relationships. As an example:

Lower Control Limit (95% Confidence) = AC-1.645(CV)(AC)

Where:

AC = Estimate of the airborne fiber concentration (fibers/cc)

Setting the Lower Control Limit = 0 and solving for CV:

0 = AC-1.645(CV)(AC)

CV = 0.61

This value was compared with CV vs. count curves. The count at which CV = 0.61 for Leidel-Busch counting statistics 8(i) or for an OSHA Salt Lake Technical Center (OSHA-SLTC) CV curve (see Appendix A for further information) was 4.4 fibers or 3.9 fibers per 100 fields, respectively. Although a lower detection limit of 4 fibers per 100 fields is supported by the OSHA-SLTC data, both data sets support the 4.5 fibers per 100 fields value.

3. **Method Performance--Precision and Accuracy**. Precision is dependent upon the total number of fibers counted and the uniformity of the fiber distribution on the filter. A general rule is to count at least 20 and not more than 100 fields. The count is discontinued when 100 fibers are counted, provided that 20 fields have already been counted. Counting more than 100 fibers results in only a small gain in precision. As the total count drops below 10 fibers, an accelerated loss of precision is noted. At this time, there is no known method to determine the absolute accuracy of the asbestos analysis. Results of samples prepared through the Proficiency Analytical Testing (PAT) Program and analyzed by the OSHA-SLTC showed no significant bias when compared to PAT reference values. The PAT samples were analyzed from 1987 to 1989 (N = 36) and the concentration range was from 120 to 1,300 fibers/mm^2.

4. **Interferences**. Fibrous substances, if present, may interfere with asbestos analysis. Some common fibers are:

Fiber glass	Perlite veins.
Anhydrite plant fibers gypsum	Some synthetic fibers.
Membrane structures	Sponge spicules and diatoms.
Microorganisms	Wollastonite.

The use of electron microscopy or optical tests such as polarized light, and dispersion staining may be used to differentiate these materials from asbestos when necessary.

5. **Sampling**.

(a) Equipment.

(i) Sample assembly. Conductive filter holder consisting of a 25-mm diameter, 3-piece cassette having a 50-mm long electrically conductive extension cowl. Backup pad, 25-mm, cellulose. Membrane filter, mixed-cellulose ester (MCE), 25-mm, plain, white, 0.8- to 1.2-µm pore size.

Notes:

(A) DO NOT RE-USE CASSETTES.

(B) Fully conductive cassettes are required to reduce fiber loss to the sides of the cassette due to electrostatic attraction.

(C) Purchase filters which have been selected by the manufacturer for asbestos counting or analyze representative filters for fiber background before use. Discard the filter lot if more than 5 fibers/100 fields are found.

(D) To decrease the possibility of contamination, the sampling system (filter-backup pad-cassette) for asbestos is usually preassembled by the manufacturer.

(ii) Gel bands for sealing cassettes.

(iii) Sampling pump. Each pump must be a battery operated, self-contained unit small enough to be placed on the monitored employee and not interfere with the work being performed. The pump must be capable of sampling at 2.5 liters per minute (L/min) for the required sampling time.

(iv) Flexible tubing, 6-mm bore.

(v) Pump calibration. Stopwatch and bubble tube/burette or electronic meter.

(b) Sampling Procedure.

(i) Seal the point where the base and cowl of each cassette meet with a gel band or tape.

(ii) Charge the pumps completely before beginning.

(iii) Connect each pump to a calibration cassette with an appropriate length of 6-mm bore plastic tubing. Do not use luer connectors--the type of cassette specified above has built-in adapters.

(iv) Select an appropriate flow rate for the situation being monitored. The sampling flow rate must be between 0.5 and 4.0 L/min for personal sampling and is commonly set between 1 and 2 L/min. Always choose a flow rate that will not produce overloaded filters.

(v) Calibrate each sampling pump before and after sampling with a calibration cassette in-line (Note: This calibration cassette should be from the same lot of cassettes used for sampling). Use a primary standard (e.g. bubble burette) to calibrate each pump. If possible, calibrate at the sampling site.

Note: If sampling site calibration is not possible, environmental influences may affect the flow rate. The extent is dependent on the type of pump used. Consult with the pump manufacturer to determine dependence on environmental influences. If the pump is affected by temperature and pressure changes, use the formula in subsection (10) of this section to calculate the actual flow rate.

(vi) Connect each pump to the base of each sampling cassette with flexible tubing. Remove the end cap of each cassette and take each air sample open face.

Ensure that each sample cassette is held open side down in the employee's breathing zone during sampling. The distance from the nose/mouth of the employee to the cassette should be about 10 cm. Secure the cassette on the collar or lapel of the employee using spring clips or other similar devices.

(vii) A suggested minimum air volume when sampling to determine TWA compliance is 25 L. For Excursion Limit (30 min sampling time) evaluations, a minimum air volume of 48 L is recommended.

(viii) The most significant problem when sampling for asbestos is overloading the filter with non-asbestos dust. Suggested maximum air sample volumes for specific environments are:

Environment	***Air Vol. (L)***
Asbestos removal operations (visible dust)	100
Asbestos removal operations (little dust)	240
Office environments	400 to 2,400

Caution: Do not overload the filter with dust. High levels of non-fibrous dust particles may obscure fibers on the filter and lower the count or make counting impossible. If more than about 25 to 30% of the field area is obscured with dust, the result may be biased low. Smaller air volumes may be necessary when there is excessive non-asbestos dust in the air. While sampling, observe the filter with a small flashlight. If there is a visible layer of dust on the filter, stop sampling, remove and seal the cassette, and replace with a new sampling assembly. The total dust loading should not exceed 1 mg.

(ix) Blank samples are used to determine if any contamination has occurred during sample handling. Prepare two blanks for the first 1 to 20 samples. For sets containing greater than 20 samples, prepare blanks as 10% of the samples. Handle blank samples in the same manner as air samples with one exception: Do not draw any air through the blank samples. Open the blank cassette in the place where the sample cassettes are mounted on the employee. Hold it open for about 30 seconds. Close and seal the cassette appropriately. Store blanks for shipment with the sample cassettes.

(x) Immediately after sampling, close and seal each cassette with the base and plastic plugs. Do not touch or puncture the filter membrane as this will invalidate the analysis.

(xi) Attach a seal (OSHA-21 or equivalent) around each cassette in such a way as to secure the end cap plug and base plug. Tape the ends of the seal together since the seal is not long enough to be wrapped end-to-end. Also wrap tape around the cassette at each joint to keep the seal secure.

(c) Sample Shipment.

(i) Send the samples to the laboratory with paperwork requesting asbestos analysis. List any known fibrous interferences present during sampling on the paperwork. Also, note the workplace operation(s) sampled.

(ii) Secure and handle the samples in such that they will not rattle during shipment nor be exposed to static electricity. Do not ship samples in expanded polystyrene peanuts, vermiculite, paper shreds, or excelsior. Tape sample cassettes to sheet bubbles and place in a container that will cushion the samples without rattling.

(iii) To avoid the possibility of sample contamination, always ship bulk samples in separate mailing containers.

6. **Analysis.**

(a) Safety Precautions.

(i) Acetone is extremely flammable and precautions must be taken not to ignite it. Avoid using large containers or quantities of acetone. Transfer the solvent in a ventilated laboratory hood. Do not use acetone near any open flame. For generation of acetone vapor, use a spark free heat source.

(ii) Any asbestos spills should be cleaned up immediately to prevent dispersal of fibers. Prudence should be exercised to avoid contamination of laboratory facilities or exposure of personnel to asbestos. Asbestos spills should be cleaned up with wet methods and/or a High Efficiency Particulate-Air (HEPA) filtered vacuum.

Caution: Do not use a vacuum without a HEPA filter--It will disperse fine asbestos fibers in the air.

(b) Equipment.

(i) Phase contrast microscope with binocular or trinocular head.

(ii) Widefield or Huygenian 10X eyepieces (Note: The eyepiece containing the graticule must be a focusing eyepiece. Use a 40X phase objective with a numerical aperture of 0.65 to 0.75).

(iii) Kohler illumination (if possible) with green or blue filter.

(iv) Walton-Beckett Graticule, type G-22 with 100 ±2 µm projected diameter.

(v) Mechanical stage. A rotating mechanical stage is convenient for use with polarized light.

(vi) Phase telescope.

(vii) Stage micrometer with 0.01-mm subdivisions.

(viii) Phase-shift test slide, mark II (Available from PTR optics Ltd., and also McCrone).

(ix) Precleaned glass slides, 25 mm X 75 mm. One end can be frosted for convenience in writing sample numbers, etc., or paste-on labels can be used.

(x) Cover glass #1-1/2.

(xi) Scalpel (#10, curved blade).

(xii) Fine tipped forceps.

(xiii) Aluminum block for clearing filter.

(xiv) Automatic adjustable pipette, 100- to 500-µL.

(xv) Micropipette, 5 µL.

(c) Reagents.

(i) Acetone (HPLC grade).

(ii) Triacetin (glycerol triacetate).

(iii) Lacquer or nail polish.

(d) Standard Preparation. A way to prepare standard asbestos samples of known concentration has not been developed. It is possible to prepare replicate samples of nearly equal concentration. This has been performed through the PAT program. These asbestos samples are distributed by the AIHA to participating laboratories. Since only about one-fourth of a 25-mm sample membrane is required for an asbestos count, any PAT sample can serve as a "standard" for replicate counting.

(e) Sample Mounting.

Note: See Safety Precautions in (6)(a) before proceeding. The objective is to produce samples with a smooth (non-grainy) background in a medium with a refractive index of approximately 1.46. The technique below collapses the filter for easier focusing and produces permanent mounts which are useful for quality control and interlaboratory comparison. An aluminum block or similar device is required for sample preparation.

(i) Heat the aluminum block to about 70°C. The hot block should not be used on any surface that can be damaged by either the heat or from exposure to acetone.

(ii) Ensure that the glass slides and cover glasses are free of dust and fibers.

(iii) Remove the top plug to prevent a vacuum when the cassette is opened. Clean the outside of the cassette if necessary. Cut the seal and/or tape on the cassette with a razor blade. Very carefully separate the base from the extension cowl, leaving the filter and backup pad in the base.

(iv) With a rocking motion cut a triangular wedge from the filter using the scalpel. This wedge should be one-sixth to one-fourth of the filter. Grasp the filter wedge with the forceps on the perimeter of the filter which was clamped between the cassette pieces. DO NOT TOUCH the filter with your finger. Place the filter on the glass slide sample side up. Static electricity will usually keep the filter on the slide until it is cleared.

(v) Place the tip of the micropipette containing about 200 µL acetone into the aluminum block. Insert the glass slide into the receiving slot in the aluminum block. Inject the acetone into the block with slow, steady pressure on the plunger while holding the pipette firmly in place. Wait 3 to 5 seconds for the filter to clear, then remove the pipette and slide from the aluminum block.

(vi) Immediately (less than 30 seconds) place 2.5 to 3.5 µL of triacetin on the filter (Note: Waiting longer than 30 seconds will result in increased index of refraction and decreased contrast between the fibers and the preparation. This may also lead to separation of the cover slip from the slide).

(vii) Lower a cover slip gently onto the filter at a slight angle to reduce the possibility of forming air bubbles. If more than 30 seconds have elapsed between acetone exposure and triacetin application, glue the edges of the cover slip to the slide with lacquer or nail polish.

(viii) If clearing is slow, warm the slide for 15 min on a hot plate having a surface temperature of about 50°C to hasten clearing. The top of the hot block can be used if the slide is not heated too long.

(ix) Counting may proceed immediately after clearing and mounting are completed.

(f) Sample Analysis. Completely align the microscope according to the manufacturer's instructions. Then, align the microscope using the following general alignment routine at the beginning of every counting session and more often if necessary.

(i) Alignment.

(A) Clean all optical surfaces. Even a small amount of dirt can significantly degrade the image.

(B) Rough focus the objective on a sample.

(C) Close down the field iris so that it is visible in the field of view. Focus the image of the iris with the condenser focus. Center the image of the iris in the field of view.

(D) Install the phase telescope and focus on the phase rings. Critically center the rings. Misalignment of the rings results in astigmatism which will degrade the image.

(E) Place the phase-shift test slide on the microscope stage and focus on the lines. The analyst must see line set 3 and should see at least parts of 4 and 5 but, not see line set 6 or 6. A microscope/microscopist combination which does not pass this test may not be used.

(ii) Counting Fibers.

(A) Place the prepared sample slide on the mechanical stage of the microscope. Position the center of the wedge under the objective lens and focus upon the sample.

(B) Start counting from one end of the wedge and progress along a radial line to the other end (count in either direction from perimeter to wedge tip). Select fields randomly, without looking into the eyepieces, by slightly advancing the slide in one direction with the mechanical stage control.

(C) Continually scan over a range of focal planes (generally the upper 10 to 15 µm of the filter surface) with the fine focus control during each fieldcount. Spend at least 5 to 15 seconds per field.

(D) Most samples will contain asbestos fibers with fiber diameters less than 1µ. Look carefully for faint fiber images. The small diameter fibers will be very hard to see. However, they are an important contribution to the total count.

(E) Count only fibers equal to or longer than 5µ. Measure the length of curved fibers along the curve.

(F) Count fibers which have a length to width ratio of 3:1 or greater.

(G) Count all the fibers in at least 20 fields. Continue counting until either 100 fibers are counted or 100 fields have been viewed; whichever occurs first. Count all the fibers in the final field.

(H) Fibers lying entirely within the boundary of the Walton-Beckett graticule field receive a count of 1. Fibers crossing the boundary once, having one end within the circle receive a count of 1/2. Do not count any fiber that crosses the graticule boundary more than once. Reject and do not count any other fibers even though they may be visible outside the graticule area. If a fiber touches the circle, it is considered to cross the line.

(I) Count bundles of fibers as one fiber unless individual fibers can be clearly identified and each individual fiber is clearly not connected to another counted fiber.

(J) Record the number of fibers in each field in a consistent way such that filter non-uniformity can be assessed.

(K) Regularly check phase ring alignment.

(L) When an agglomerate (mass of material) covers more than 25% of the field of view, reject the field and select another. Do not include it in the number of fields counted.

(M) Perform a "blind recount" of 1 in every 10 filter wedges (slides). Re-label the slides using a person other than the original counter.

(g) Fiber Identification. As previously mentioned in (1)(c), PCM does not provide positive confirmation of asbestos fibers. Alternate differential counting techniques should be used if discrimination is desirable. Differential counting may include primary discrimination based on morphology, polarized light analysis of fibers, or modification of PCM data by Scanning Electron or Transmission Electron Microscopy. A great deal of experience is required to routinely and correctly perform differential counting. It is discouraged unless it is legally necessary. Then, only if a fiber is obviously not asbestos should it be excluded from the count. Further discussion of this technique can be found in reference 8(j). If there is a question whether a fiber is asbestos or not, follow the rule: "**WHEN IN DOUBT, COUNT**."

(h) Analytical Recommendations--Quality Control System.

(i) All individuals performing asbestos analysis must have taken the NIOSH course for sampling and evaluating airborne asbestos or an equivalent course.

(ii) Each laboratory engaged in asbestos counting must set up a slide trading arrangement with at least two other laboratories in order to compare performance and eliminate inbreeding of error. The slide exchange occurs at least semiannually. The round robin results must be posted where all analysts can view individual analyst's results.

(iii) Each laboratory engaged in asbestos counting must participate in the Proficiency Analytical Testing Program, the Asbestos Analyst Registry or equivalent.

(iv) Each analyst must select and count prepared slides from a "slide bank". These are quality assurance counts. The slide bank must be prepared using uniformly distributed samples taken from the workload. Fiber densities should cover the entire range routinely analyzed by the laboratory. These slides are counted blind by all counters to establish an original standard deviation. This historical distribution is compared with the quality assurance counts. A counter must have 95% of all quality control samples counted within three standard deviations of the historical mean. This count is then integrated into a new historical mean and standard deviation for the slide. The analyses done by the counters to establish the slide bank may be used for an interim quality control program if the data are treated in a proper statistical fashion.

7. **Calculations.**

(a) Calculate the estimated airborne asbestos fiber concentration on the filter sample using the following formula:

$$AC = \frac{\left[\left(\frac{FB}{FL}\right) - \left(\frac{BFB}{BFL}\right)\right] X\ ECA}{1000\ X\ FR\ X\ T\ X\ MFA}$$

Where:

AC = Airborne fiber concentration
FB = Total number of fibers greater than 5 µm counted
FL = Total number of fields counted on the filter
BFB = Total number of fibers greater than 5µm counted in the blank
BFL = Total number of fields counted on the blank
ECA = Effective collecting area of filter (385 mm^2 nominal for a 25-mm filter.)
FR = Pump flow rate (L/min)
MFA = Microscope count field area (mm^2). This is 0.00785 mm^2 for a Walton-

Beckett Graticule.

T = Sample collection time (min)

1,000 = Conversion of L to cc

Note: The collection area of a filter is seldom equal to 385 mm^2. It is appropriate for laboratories to routinely monitor the exact diameter using an inside micrometer. The collection area is calculated according to the formula:

$$\textbf{Area} = \pi(d/2)^2$$

(b) Short-cut Calculation

Since a given analyst always has the same interpupillary distance, the number of fields per filter for a particular analyst will remain constant for a given size filter. The field size for that analyst is constant (i.e. the analyst is using an assigned microscope and is not changing the reticle). For example, if the exposed area of the filter is always 385 mm^2 and the size of the field is always 0.00785 mm^2, the number of fields per filter will always be 49,000. In addition it is necessary to convert liters of air to cc. These three constants can then be combined such that ECA/(1,000 X MFA) = 49. The previous equation simplifies to:

$$AC = \frac{\left(\frac{FB}{FL}\right) - \left(\frac{BFB}{BFL}\right) X\, 49}{FR\ X\ T}$$

(c) Recount Calculations. As mentioned in step 13 of 6 (f)(ii), a "blind recount" of 10% of the slides is performed. In all cases, differences will be observed between the first and second counts of the same filter wedge. Most of these differences will be due to chance alone, that is, due to the random variability (precision) of the count method. Statistical recount criteria enables one to decide whether observed differences can be explained due to chance alone or are probably due to systematic differences between analysts, microscopes, or other biasing factors. The following recount criterion is for a pair of counts that estimate AC in fibers/cc. The criterion is given at the type-I error level. That is, there is 5% maximum risk that we will reject a pair of counts for the reason that one might be biased, when the large observed difference is really due to chance. Reject a pair of counts if:

$$\left|\sqrt{AC_2} - \sqrt{AC_1}\right| > 2.78\ X \left(\sqrt{AC_{avg}}\right) X\ CV_{FB}$$

Where:

AC_1 = lower estimated airborne fiber concentration
AC_2 = higher estimated airborne fiber concentration

AC_{avg}= average of the two concentration estimates
CV_{FB} = CV for the average of the two concentration estimates

If a pair of counts are rejected by this criterion then, recount the rest of the filters in the submitted set. Apply the test and reject any other pairs failing the test. Rejection shall include a memo to the industrial hygienist stating that the sample failed a statistical test for homogeneity and the true air concentration may be significantly different than the reported value.

(d) Reporting Results. Report results to the industrial hygienist as fibers/cc. Use two significant figures. If multiple analyses are performed on a sample, an average of the results is to be reported unless any of the results can be rejected for cause.

8. **References**.

(a) Dreesen, W.C., et al, U.S. Public Health Service: A Study of Asbestosis in the Asbestos Textile Industry, (Public Health Bulletin No. 241), US Treasury Dept., Washington, DC, 1938.

(b) Asbestos Research Council: The Measurement of Airborne Asbestos Dust by the Membrane Filter Method (Technical Note), Asbestos Research Council, Rockdale, Lancashire, Great Britain, 1969.

(c) Bayer, S.G., Zumwalde, R.D., Brown, T.A., Equipment and Procedure for Mounting Millipore Filters and Counting Asbestos Fibers by Phase Contrast Microscopy, Bureau of Occupational Health, U.S. Dept. of Health, Education and Welfare, Cincinnati,OH,1969.

(d) NIOSH Manual of Analytical Methods, 2nd ed., Vol. 1 (DHEW/NIOSH Pub. No. 77-157-A). National Institute for Occupational Safety and Health, Cincinnati, OH, 1977.pp.239-1-239-21.

(e) Asbestos, Code of Federal Regulations 29 CFR 1910.1001. 1971.

(f) Occupational Exposure to Asbestos, Tremolite, Anthophyllite, and Actinolite. Final Rule, Federal Register 51: 119 (20 June 1986). pp.22612-22790.

(g) Asbestos, Tremolite, Anthophyllite, and Actinolite, Code of Federal Regulations 1910.1001. 1988. pp 711-752.

(h) Criteria for a Recommended Standard--Occupational Exposure to Asbestos (DHEW/NIOSH Pub. No. HSM 72-10267), National Institute for Occupational Safety and Health NIOSH, Cincinnati, OH, 1972. pp. III-1-III-24.

(i) Leidel, N.A., Bayer, S.G., Zumwalde, R.D., Busch, K.A., USPHS/NIOSH Membrane Filter Method for Evaluating Airborne Asbestos Fibers (DHEW/NIOSH Pub. No. 79-127). National Institute for Occupational Safety and Health, Cincinnati, OH, 1979.

(j) Dixon, W.C., Applications of Optical Microscopy in Analysis ofAsbestos and Quartz, Analytical Techniques in Occupational Health Chemistry, edited by D.D. Dollberg and A.W. Verstuyft. Wash. D.C.: American Chemical Society, (ACS Symposium Series 120) 1980. pp. 13-41.

9. **Quality Control**. The OSHA asbestos regulations require each laboratory to establish a quality control program. The following is presented as an example of how the OSHA-SLTC constructed its internal CV curve as part of meeting this requirement. Data for the CV curve shown below is from 395 samples collected during OSHA compliance inspections and analyzed from October 1980 through April 1986. Each sample was counted by 2 to 5 different counters independently of one another. The standard deviation and the CV statistic was calculated for each sample. This data was then plotted on a graph of CV vs. fibers/mm^2. A least squares regression was performed using the following equation:

$$\mathbf{CV = antilog_{10}[A(log_{10}(x))2+B(log_{10}(x))+C]}$$

Where:

x = the number of fibers/mm^2
Application of least squares gave:
A = 0.182205
B = -0.973343
C = 0.327499

Using these values, the equation becomes:

$$CV = antilog_{10}[0.182205(log_{10}(x))^2 - 0.973343(log_{10}(x)) + 0.327499].$$

10. **Sampling Pump Flow Rate Corrections**. This correction is used if a difference greater than 5% in ambient temperature and/or pressure is noted between calibration and sampling sites and the pump does not compensate for the differences.

$$Q_{act} = Q_{cal} \times \sqrt{\left(\frac{P_{cal}}{P_{act}}\right) \times \left(\frac{T_{act}}{T_{cal}}\right)}$$

Where:

Qact = actual flow rate
Qcal = calibrated flow rate (if a rotameter was used, the rotameter value)
Pcal = uncorrected air pressure at calibration
Pact = uncorrected air pressure at sampling site
Tact = temperature at sampling site (K)
Tcal = temperature at calibration (K)

11. **Walton-Beckett Graticule**.

When ordering the Graticule for asbestos counting, specify the exact disc diameter needed to fit the ocular of the microscope and the diameter (mm) of the circular counting area. Instructions for measuring the dimensions necessary are listed:

(a) Insert any available graticule into the focusing eyepiece and focus so that the graticule lines are sharp and clear.

(b) Align the microscope.

(c) Place a stage micrometer on the microscope object stage and focus the microscope on the graduated lines.

(d) Measure the magnified grid length, PL (µm), using the stage micrometer.

(e) Remove the graticule from the microscope and measure its actual grid length, AL (mm). This can be accomplished by using a mechanical stage fitted with verniers, or a jeweler's loupe with a direct reading scale.

(f) Let D = 100 µm. Calculate the circle diameter, d_c (mm), for the Walton-Beckett graticule and specify the diameter when making a purchase:

$$D_c = \frac{AL \times D}{PL}$$

Example: If PL = 108 µm, AL = 2.93 mm and D = 100 µm, then,
d_c = (2.93 x 100)/108 = 2.71 mm

(g) Each eyepiece-objective-reticle combination on the microscope must be calibrated. Should any of the three be changed (by zoom adjustment, disassembly, replacement, etc.), the combination must be recalibrated. Calibration may change if interpupillary distance is changed. Measure the field diameter, D (acceptable range: 100 ±2 µm) with a stage micrometer upon receipt of the graticule from the manufacturer. Determine the field area (mm2).

Field Area = π(D/2)2

If D = 100 µm = 0.1 mm, then

Field Area = $+(0.1\ mm/2)^2 = 0.00785\ mm^2$

The Graticule is available from: Graticules Ltd., Morley Road, Tonbridge TN9 IRN, Kent, England (Telephone 011-44-732-359061). Also available from PTR Optics Ltd., 145 Newton Street, Waltham, MA 02154 [telephone (617) 891-6000] or McCrone Accessories and Components, 2506 S. Michigan Ave., Chicago, IL 60616 [phone (312) 842-7100]. The graticule is custom made for each microscope.

BILLING CODE 4510-26-P

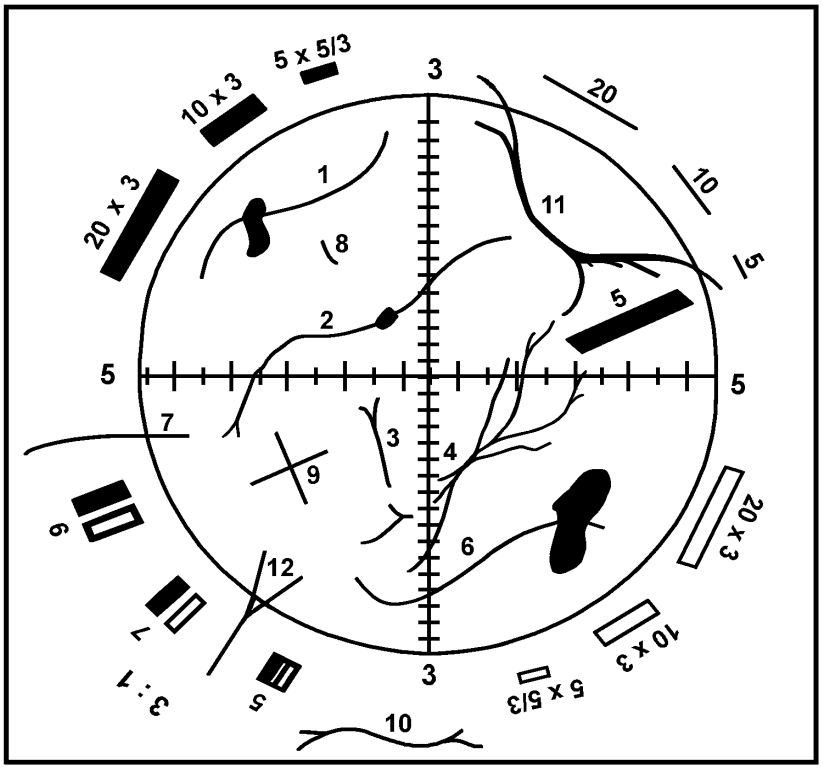

Figure 1: Walton-Beckett Graticule with some explanatory fibers.
Counts for the Fibers in the Figure

Structure No.	*Count*	*Explanation*
1 to 6	1	Single fibers all contained within the circle.
7	1/2	Fiber crosses circle once.
8	0	Fiber too short.
9	2	Two crossing fibers.
10	0	Fiber outside graticule.
11	0	Fiber crosses graticule twice.
12	1/2	Although split, fiber only crosses once.

WAC 296-62-07741 Appendix D--Medical questionnaires--Mandatory.

This mandatory appendix contains the medical questionnaires that must be administered to all employees who are exposed to asbestos, tremolite, anthophyllite, and actinolite, or a combination of these minerals above the permissible exposure limit (0.1 f/cc), and who will therefore be included in their employer's medical surveillance program. Part 1 of the appendix contains the initial medical questionnaire, which must be obtained for all new hires who will be covered by the medical surveillance requirements. Part 2 includes the abbreviated periodical medical questionnaire, which appendix contains the medical questionnaires that must be administered to all employees who are must be administered to all employees who are provided periodic medical examinations under the medical surveillance provisions of the standard.

PART 1
INITIAL MEDICAL QUESTIONNAIRE

1. NAME
_____
2. SOCIAL SECURITY # … … … … … … … … …
1 2 3 4 5 6 7 8 9
3. CLOCK NUMBER … … … … … …
10 11 12 13 14 15
4. PRESENT OCCUPATION
_____
5. PLANT
_____
6. ADDRESS
_____
7. _____
(Zip Code)
8. TELEPHONE NUMBER
_____
9. INTERVIEWER
_____
10. DATE _____ … … … … … …
16 17 18 19 20 21
11. Date of birth ……..
Month Day Year
… … … … … …
22 23 24 25 26 27
12. Place of birth
_____
13. Sex
1. Male _____
2. Female _____
14. What is your marital status?
1. Single _____
2. Married _____
3. Widowed _____
4. Separated/ Divorced ____
15. Race
1. White _____
2. Black _____
3. Asian _____
4. Hispanic ____
5. Indian _____
6. Other_____

16. What is the highest grade completed in school? _____
(For example 12 years is completion of high school)

OCCUPATIONAL HISTORY

17A. Have you ever worked full time (30 hours per week or more) for 6 months or more? 1. Yes_____ 2. No _____

If yes to 17A:

B. Have you ever worked for a year or more in any dusty job? 1. Yes _____ 2. No _____ 3. Does not apply _____
Specify job/industry Total years worked _____
Was dust exposure: 1. Mild _____ 2. Moderate _____3. Severe _____

C Have you ever been exposed to gas or chemical fumes in your work? 1. Yes _____ 2. No _____
Specify job/industry Total years worked _____
Was exposure: 1. Mild _____ 2. Moderate _____ 3. Severe _____

D What has been your usual occupation or job--the one you have worked at the longest?
1. Job occupation
2. Number of years employed in this occupation
3. Position/job title
4. Business, field or industry

(Record on lines the years in which you have worked in any of these industries, e.g., 1960-1969.)
Have you ever worked:

		YES	NO
E.	In a mine?	☐	☐
F.	In a quarry?	☐	☐
G	In a foundry?	☐	☐
H.	In a pottery?	☐	☐
I.	In a cotton, flax or hemp mill?	☐	☐
J.	With asbestos?	☐	☐

18. **PAST MEDICAL HISTORY**

		YES	NO
A.	Do you consider yourself to be in good health? If "no" state reason	☐	☐
B.	Have you any defect in vision? If "yes" state nature of defect _____	☐	☐
C.	Have you any hearing defect? If "yes" state nature of defect _____	☐	☐

D. Are you suffering from or have you ever suffered from:

a.	Epilepsy (or fits, seizures, convulsions)?	☐	☐
b.	Rheumatic fever?	☐	☐
c.	Kidney disease?	☐	☐
d.	Bladder disease?	☐	☐
e.	Diabetes?	☐	☐
f.	Jaundice	☐	☐

19. **CHEST COLDS AND CHEST ILLNESSES**

19A. If you get a cold, does it usually go to your chest? (Usually means more than 1/2 the time.) 1. Yes _____ 2. No _____ 3. Do not get colds _____

20A. During the past 3 years, have you had any chest illnesses that have kept you off work, indoors at home, or in bed? 1. Yes _____ 2. No _____

If yes to 20A:

B Did you produce phlegm with any of these chest illnesses? 1. Yes _____ 2. No _____ 3. Does not apply _____

C. In the last 3 years, how many such illnesses with (increased) phlegm did you have which lasted a week or more? Number of illnesses _____ No such illnesses _____

21. Did you have any lung trouble before the age of 16? 1. Yes _____ 2. No_____

22. Have you ever had any of the following?

1A Attacks of bronchitis? 1. Yes _____ 2. No _____

If yes to 1A:

B. Was it confirmed by a doctor? 1. Yes _____ 2. No _____ 3. Does not apply _____

C. At what age was your first attack? Age in years _____ Does not apply _____

2A. Pneumonia? (include broncho-pneumonia) 1. Yes ____ 2. No _____

If yes to 2A:

B. Was it confirmed by a doctor? 1. Yes _____ 2. No_____ 3. Does not apply _____

C. At what age did you first have it? Age in years _____ Does not apply _____

3A. Hay fever? 1. Yes _____ 2. No _____

If yes to 3A:

B. Was it confirmed by a doctor? 1. Yes _____ 2. No _____ 3. Does not apply _____

C. At what age did it start? Age in years _____ Does not apply _____

23A. Have you ever had chronic bronchitis? 1. Yes _____ 2. No _____

If yes to 23A:

B. Do you still have it? 1. Yes _____ 2. No _____ 3. Does not apply _____

C. Was it confirmed by a doctor? 1. Yes _____ 2. No _____ 3. Does not apply _____

D. At what age did it start? Age in years _____ Does not apply _____

24A. Have you ever had emphysema? 1. Yes _____ 2. No _____

If yes to 24A:

B. Do you still have it? 1. Yes _____ 2. No _____ 3. Does not apply _____

C. Was it confirmed by a doctor? 1. Yes _____ 2. No _____ 3. Does not apply _____

D. At what age did it start? Age in years _____ Does not apply _____

25A. Have you ever had asthma? 1. Yes _____ 2. No _____

If yes to 25A:

B. Do you still have it? 1. Yes _____ 2. No _____ 3. Does not apply _____

C. Was it confirmed by a doctor? 1. Yes _____ 2. No _____ 3. Does not apply _____

D. At what age did it start? Age in years _____ Does not apply _____

E. If you no longer have it, at what age did it stop? Age stopped _____ Does not apply _____

26. Have you ever had:

A. Any other chest illness? 1. Yes _____ 2. No _____

If yes, please specify

_____

B. Any chest operations? 1. Yes _____ 2. No _____

If yes, please specify

_____

C. Any chest injuries? 1. Yes _____ 2. No _____

If yes, please specify

_____

27A. Has a doctor ever told you that you had heart trouble? 1. Yes _____ 2. No _____

If yes to 27A:

B. Have you ever had treatment for heart trouble in the past 10 years? 1. Yes _____ 2. No _____ 3. Does not apply _____

28A. Has a doctor ever told you that you had high blood pressure? 1. Yes _____ 2. No _____

If yes to 28A:

B. Have you had any treatment for high blood pressure (hypertension) in the past 10 years? 1. Yes _____ 2. No _____ 3. Does not apply _____

29. When did you last have your chest x-rayed? (Year) … … … …
25 26 27 28

30. Where did you last have your chest x-rayed (if known)? What was the outcome?

_____

FAMILY HISTORY

31. Were either of your natural parents ever told by a doctor that they had a chronic lung condition such as:

	FATHER			MOTHER		
	1. Yes	2. No.	3. Do not Know	1. Yes	2. No	3. Do not Know
A. Chronic Bronchitis?	_____	_____	_____	_____	_____	_____
B. Emphysema?	_____	_____	_____	_____	_____	_____
C. Asthma?		_____	_____	_____	_____	_____
D. Lung cancer?	_____	_____	_____	_____	_____	_____
E. Other chest conditions?	_____	_____	_____	_____	_____	_____
F. Is parent currently alive?		_____	_____	_____	_____	_____

G. Please specify _____ Age if living Age if living _____
_____ Age at death Age at death _____
_____ Do not know Do not know _____

H. Please specify cause of death_____

COUGH

32A. Do you usually have a cough? (Count a cough with first smoke or on first going out of doors. Exclude clearing of throat.) (If no, skip to question 32C.) 1. Yes _____ 2. No _____

B. Do you usually cough as much as 4 to 6 times a day 4 or more days out of the week? 1. Yes _____ 2. No _____

C. Do you usually cough at all on getting up or first thing in the morning? 1. Yes _____ 2. No _____

D. Do you usually cough at all during the rest of the day or at night? 1. Yes _____2. No _____

IF YES TO ANY OF ABOVE (32A, B, C, OR D), ANSWER THE FOLLOWING. IF NO TO ALL, CHECK DOES NOT APPLY AND SKIP TO NEXT PAGE

E. Do you usually cough like this on most days for 3 consecutive months or more during the year? 1. Yes _____ 2. No _____ 3. Does not apply _____

F. For how many years have you had the cough? Number of years _____ Does not apply _____

33A. Do you usually bring up phlegm from your chest? (Count phlegm with the first smoke or on first going out of doors. Exclude phlegm from the nose. Count swallowed phlegm.) (If no, skip to 33C.) 1. Yes _____ 2. No _____

B. Do you usually bring up phlegm like this as much as twice a day 4 or more days out of the week? 1. Yes _____ 2. No _____

C. Do you usually bring up phlegm at all on getting up or first thing in the morning? 1. Yes _____ 2. No _____

D. Do you usually bring up phlegm at all during the rest of the day or at night? 1. Yes _____ 2. No _____

IF YES TO ANY OF THE ABOVE (33A, B, C, OR D), ANSWER THE FOLLOWING: IF NO TO ALL, CHECK DOES NOT APPLY AND SKIP TO 34A.

E. Do you bring up phlegm like this on most days for 3 consecutive months or more during the year? 1. Yes _____ 2. No _____ 3. Does not apply _____

F. For how many years have you had trouble with phlegm? Number of years_____ Does not apply _____

episodes of cough and phlegm

34A. Have you had periods or episodes of increased*) cough and phlegm lasting for 3 weeks or more each year? 1. Yes _____ 2. No _____

*(For persons who usually have cough and/or phlegm.)

If yes to 34A:

B. For how long have you had at least 1 such episode per year? Number of years _____ Does not apply _____

WHEEZING

35A. Does your chest ever sound wheezy or whistling:

1. When you have a cold? 1. Yes _____ 2. No _____
2. Occasionally apart from colds? 1. Yes _____ 2. No _____
3. Most days or nights? 1. Yes _____ 2. No _____

If yes to 1, 2, or 3 in 35A:

B. For how many years has this been present? Number of years _____ Does not apply _____

36A. Have you ever had an attack of wheezing that has made you feel short of breath? 1. Yes _____ 2. No _____

If yes to 36A:

B. How old were you when you had your first such attack? Age in years _____ Does not apply _____

C. Have you had 2 or more such episodes? 1. Yes _____ 2. No _____ 3. Does not apply _____

D. Have you ever required medicine or treatment for the(se) attack(s)? 1. Yes _____ 2. No _____ 3. Does not apply _____

BREATHLESSNESS

37. If disabled from walking by any condition other than heart or lung disease, please describe and proceed to question 39A.
Nature of condition(s)

38A. Are you troubled by shortness of breath when hurrying on the level or walking up a slight hill? 1. Yes _____ 2. No _____

If yes to 38A:

B. Do you have to walk slower than people of your age on the level because of breathlessness? 1. Yes _____ 2. No _____ 3. Does not apply _____

C. Do you ever have to stop for breath when walking at your own pace on the level? 1. Yes _____2. No _____ 3. Does not apply _____

D. Do you ever have to stop for breath after walking about 100 yards (or after a few minutes) on the level? 1. Yes _____2. No _____ 3. Does not apply _____

E. Are you too breathless to leave the house or breathless on dressing or climbing one flight of stairs? 1. Yes _____ 2. No _____ 3. Does not apply _____

TOBACCO SMOKING

39A. Have you ever smoked cigarettes? (No means less than 20 packs of cigarettes or 12 oz. of tobacco in a lifetime or less than 1 cigarette a day for 1 year.) 1. Yes _____ 2. No _____

If yes to 39A:

B.	Do you now smoke cigarettes (as of one month ago)?	1. Yes _____ 2. No _____ 3. Does not apply _____
C.	How old were you when you first started regular cigarette smoking?	Age in years _____ Does not apply _____
D.	If you have stopped smoking cigarettes completely, how old were you when you stopped?	Aged stopped _____ Check if still smoking _____ Does not apply _____
E.	How many cigarettes do you smoke per day now?	Cigarettes per day _____ Does not apply _____
F.	On the average of the entire time you smoked, how many cigarettes did you smoke per day?	Cigarettes per day _____ Does not apply _____
G.	Do you or did you inhale the cigarette smoke?	1. Does not apply _____ 2. Not at all _____ 3. Slightly _____ 4. Moderately _____ 5. Deeply _____

40A. Have you ever smoked a pipe regularly? (Yes means more than 12 ounces of tobacco in a lifetime.) 1. Yes _____ 2. No _____

If yes to 40A:

FOR PERSONS WHO HAVE EVER SMOKED A PIPE

B.1.	How old were you when you started to smoke a pipe regularly?	Age _____
2.	If you have stopped smoking a pipe completely, how old were you when you stopped?	Age stopped _____ Check if still smoking pipe _____ Does not apply _____
C.	On the average over the entire time you smoked a pipe, how much pipe tobacco did you smoke per week?	_____ oz. per week (a standard pouch of tobacco contains 1-1/2 ounces) _____ Does not apply
	How much pipe tobacco are you smoking now?	oz. per week _____ Not currently smoking a pipe _____
E.	Do you or did you inhale the pipe smoke?	1. Never smoked _____ 2. Not at all _____ 3. Slightly _____ 4. Moderately _____ 5. Deeply _____

41A. Have you ever smoked cigars regularly? (Yes means more than 1 cigar a week for a year.) 1. Yes _____ 2. No _____

If yes to 41A:

FOR PERSONS WHO HAVE EVER SMOKED CIGARS

B.1. How old were you when you started smoking cigars regularly? Age _____

2. If you have stopped smoking cigars completely, how old were you when you stopped? Age stopped _____ Check if still smoking cigars _____ Does not apply _____

C. On the average over the entire time you smoked cigars, how many cigars did you smoke per week? Cigars per week _____ Does not apply _____

D. How many cigars are you smoking per week now? Cigars per week _____ Check if not smoking cigars currently _____

E. Do you or did you inhale the cigar smoke?
1. Never smoked _____
2. Not at all _____
3. Slightly _____
4. Moderately _____
5. Deeply _____

Signature _____ Date _____

PART 2
PERIODIC MEDICAL QUESTIONNAIRE

1. NAME
_____
2. SOCIAL SECURITY # … … … … … … … … …
1 2 3 4 5 6 7 8 9
3. CLOCK NUMBER … … … … … …
10 11 12 13 14 15
4. PRESENT OCCUPATION
_____
5. PLANT
_____
6. ADDRESS
_____
7. _____
(Zip Code)
8. TELEPHONE NUMBER
_____
9. INTERVIEWER
_____
10. DATE _____… … … … … …
16 17 18 19 20 21
11. What is your marital status? 1. Single _____ 2. Married _____ 3. Widowed _____ 4. Separated/ Divorced _____

12. **OCCUPATIONAL HISTORY**

12A. Have you ever worked full time (30 hours per week or more) for 6 months or more? 1. Yes_____ 2. No _____

If yes to 12A:

12 B. In the past, did you work in a dusty job? 1. Yes _____ 2. No _____ 3. Does not apply _____

12 C Was dust exposure: 1. Mild _____ 2. Moderate _____3. Severe _____

12 D In the past, were you exposed to gas or chemical fumes in your work? 1. Yes_____ 2. No _____

12 E Was exposure 1. Mild _____ 2. Moderate _____3. Severe

12 F. In the past year, what was your:

1. Job occupation? _____

2. Position/job title? _____

13. **RECENT MEDICAL HISTORY**

13A. Do you consider yourself to be in good health? Yes _____ No _____
If no, state reason _____

13B. In the past year, have you developed: Yes _____ No _____
Epilepsy? _____ Rheumatic fever?
Kidney disease? _____ Bladder disease? _____
Diabetes? _____ Jaundice? _____
Cancer? _____

14. **CHEST COLDS AND CHEST ILLNESS**

14A. If you get a cold, does it usually go to your chest? (Usually means more than 1/2 the time.)
1. Yes _____ 2. No _____
3. Do not get colds _____

15A. During the past year, have you had any chest illnesses that have kept you off work, indoors at home, or in bed?
1. Yes _____2. No _____
3. Does not apply _____

If yes to 15a:

15B. Did you produce phlegm with any of these chest illnesses?
1. Yes _____ 2. No _____
3. Does not apply _____

15C. In the past year, how many such illnesses with (increased) phlegm did you have which lasted a week or more?
Number of illnesses _____
No such illnesses _____

16. **RESPIRATORY SYSTEM**

In the past year have you had:

	Yes or No		Further Comment on Positive Answers
Asthma	_____	Bronchitis	_____
Hay fever	_____	Other allergies	_____

	Yes or No		Further Comment on Positive Answers
Pneumonia	_____	Tuberculosis	_____
Chest surgery	_____	Other lung	_____
Problems	_____	Heart disease	_____

Do you have:

	Yes or No		Further Comment on Positive Answers
Frequent colds	_____	Chronic cough	_____
Shortness of breath when walking or climbing one flight of stairs	_____		

Do you:

Wheeze	_____	Cough up phlegm	_____
Smoke cigarettes	_____	Packs per day _____	How many years _____

Date _____ Signature _____

WAC 296-62-07743 Appendix E--Interpretation and classification of chest roentgenograms--Mandatory.

(1) Chest roentgenograms must be interpreted and classified in accordance with a professionally accepted classification system and recorded on an interpretation form following the format of the CDC/NIOSH (M) 2.8 form. As a minimum, the content within the bold lines of this form (items one through four) must be included. This form is not to be submitted to NIOSH.

(2) Roentgenograms must be interpreted and classified only by a B-reader, a board eligible/certified radiologist, or an experienced physician with known expertise in pneumoconioses.

(3) All interpreters, whenever interpreting chest roentgenograms made under this section, must have immediately available for reference a complete set of the ILO-U/C International Classification of Radiographs for Pneumoconioses, 1980.

WAC 296-62-07745 Appendix F--Work practices and engineering controls for automotive brake and clutch inspection, disassembly, repair and assembly--Mandatory.

This mandatory appendix specifies engineering controls and work practices that must be implemented by the employer during automotive brake and clutch inspection, disassembly, repair, and assembly operations. Proper use of these engineering controls and work practices will reduce employees' asbestos exposure below the permissible exposure level during clutch and brake inspection, disassembly, repair, and assembly operations. The employer must institute engineering controls and work practices using either the method set forth in (1) or (2) of this appendix, or any other method which the employer can demonstrate to be equivalent in terms of reducing employee exposure to asbestos as defined and which meets the requirements described in (3) of this appendix, for those facilities in which no more than 5 pairs of brakes or 5 clutches are inspected, disassembled, reassembled and/or repaired per week, the method set forth in (4) of this appendix may be used:

(1) **Negative pressure enclosure/HEPA vacuum system method**.

(a) The brake and clutch inspection, disassembly, repair, and assembly operations must be enclosed to cover and contain the clutch or brake assembly and to prevent the release of asbestos fibers into the worker's breathing zone.

(b) The enclosure must be sealed tightly and thoroughly inspected for leaks before work begins on brake and clutch inspection, disassembly, repair and assembly.

(c) The enclosure must be such that the worker can clearly see the operation and must provide impermeable sleeves through which the worker can handle the brake and clutch inspection, disassembly, repair and assembly. The integrity of the sleeves and ports must be examined before work begins.

(d) A HEPA-filtered vacuum must be employed to maintain the enclosure under negative pressure throughout the operation. Compressed-air may be used to remove asbestos fibers or particles from the enclosure.

(e) The HEPA vacuum must be used first to loosen the asbestos containing residue from the brake and clutch parts and then to evacuate the loosened asbestos containing material from the enclosure and capture the material in the vacuum filter.

(f) The vacuum's filter, when full, must be first wetted with a fine mist of water, then removed and placed immediately in an impermeable container, labeled according to WAC 296-62-07721 (6) and disposed of according to WAC 296-62-07723.

(g) Any spills or releases of asbestos containing waste material from inside of the enclosure or vacuum hose or vacuum filter must be immediately cleaned up and disposed of according to WAC 296-62-07723.

(2) **Low pressure/wet cleaning method**.

(a) A catch basin must be placed under the brake assembly, positioned to avoid splashes and spills.

(b) The reservoir must contain water containing an organic solvent or wetting agent. The flow of liquid must be controlled such that the brake assembly is gently flooded to prevent the asbestos-containing brake dust from becoming airborne.

(c) The aqueous solution must be allowed to flow between the brake drum and brake support before the drum is removed.

(d) After removing the brake drum, the wheel hub and back of the brake assembly must be thoroughly wetted to suppress dust.

(e) The brake support plate, brake shoes and brake components used to attach the brake shoes must be thoroughly washed before removing the old shoes.

(f) In systems using filters, the filters, when full, must be first wetted with a fine mist of water, then removed and placed immediately in an impermeable container, labeled according to WAC 296-62-07721 (6) and disposed of according to WAC 296-62-07723.

(g) Any spills of asbestos-containing aqueous solution or any asbestos-containing waste material must be cleaned up immediately and disposed of according to WAC 296-62-07723.

(h) The use of dry brushing during low pressure/wet cleaning operations is prohibited.

(3) **Equivalent methods**. An equivalent method is one which has sufficient written detail so that it can be reproduced and has been demonstrated that the exposures resulting from the equivalent method are equal to or less than the exposure which would result from the use of the method described in subsection (1) of this appendix. For purposes of making this comparison, the employer must assume that exposures resulting from the use of the method described in subsection (1) of this appendix must not exceed 0.016 f/cc, as measured by the WISHA reference method and as averaged over at least 18 personal samples.

(4) **Wet method**.

(a) A spray bottle, hose nozzle, or other implement capable of delivering a fine mist of water or amended water or other delivery system capable of delivering water at low pressure, must be used to first thoroughly wet the brake and clutch parts. Brake and clutch components must then be wiped clean with a cloth.

(b) The cloth must be placed in an impermeable container, labeled according to WAC 296-62-07721 (6) and then disposed of according to WAC 296-62-07723, or the cloth must be laundered in a way to prevent the release of asbestos fibers in excess of 0.1 fiber per cubic centimeter of air.

(c) Any spills of solvent or any asbestos containing waste material must be cleaned up immediately according to WAC 296-62-07723.

(d) The use of dry brushing during the wet method operations is prohibited.

WAC 296-62-07747 Appendix G--Substance technical information for asbestos--Nonmandatory.

(1) **Substance identification**.

(a) Substance: "Asbestos" is the name of a class of magnesium-silicate minerals that occur in fibrous form. Minerals that are included in this group are chrysotile, crocidolite, amosite, tremolite asbestos, anthophyllite asbestos, and actinolite asbestos.

(b) Asbestos is used in the manufacture of heat-resistant clothing, automotive brake and clutch linings, and a variety of building materials including floor tiles, roofing felts, ceiling tiles, asbestos-cement pipe and sheet, and fire-resistant drywall. Asbestos is also present in pipe and boiler insulation materials, and in sprayed-on materials located on beams, in crawlspaces, and between walls.

(c) The potential for a product containing asbestos, tremolite, anthophyllite, and actinolite to release breathable fibers depends on its degree of friability. Friable means that the material can be crumbled with hand pressure and is therefore likely to emit fibers. The fibrous or fluffy sprayed-on materials used for fireproofing, insulation, or sound proofing are considered to be friable, and they readily release airborne fibers if disturbed. Materials such as vinyl-asbestos floor tile or roofing felts are considered nonfriable and generally do not emit airborne fibers unless subjected to sanding or sawing operations. Asbestos-cement pipe or sheet can emit airborne fibers if the materials are cut or sawed, or if they are broken during demolition operations.

(d) Permissible exposure: Exposure to airborne asbestos fibers may not exceed 0.1 fiber per cubic centimeter of air (0.1 f/cc) averaged over the eight-hour workday (time weighted average), or 1 fiber per cubic centimeter of air (1 f/cc) during any thirty minute period, (excursion limit).

(2) **Health hazard data**.

(a) Asbestos can cause disabling respiratory disease and various types of cancers if the fibers are inhaled. Inhaling or ingesting fibers from contaminated clothing or skin can also result in these diseases. The symptoms of these diseases generally do not appear for twenty or more years after initial exposure.

(b) Exposure to asbestos has been shown to cause lung cancer, mesothelioma, and cancer of the stomach and colon. Mesothelioma is a rear cancer of the thin membrane lining of the chest and abdomen. Symptoms of mesothelioma include shortness of breath, pain in the walls of the chest, and/or abdominal pain.

(3) **Respirators and protective clothing.**

(a) Respirators: You are required to wear a respirator when performing tasks that result in asbestos exposure that exceeds 0.1 fiber per cubic centimeter of air (0.1 f/cc) as an eight-hour time weighted average and/or 1.0 fiber per cubic centimeter (1 f/cc) during any thirty minute period (excursion limit). These conditions can occur while your employer is in the process of installing engineering controls to reduce asbestos exposure, or where engineering controls are not feasible to reduce asbestos exposure. Air-purifying respirators equipped with a high-efficiency particulate air (HEPA) filter can be used where airborne asbestos fiber concentrations do not exceed 1 f/cc; otherwise, air-supplied, positive-pressure, full facepiece respirators must be used. Disposable respirators or dust masks are not permitted to be used for asbestos work. For effective protection, respirators must fit your face and head snugly. Your employer is required to conduct fit tests when you are first assigned a respirator and every six months thereafter. Respirators should not be loosened or removed in work situations where their use is required.

(b) Protective clothing: You are required to wear protective clothing in work areas where asbestos fiber concentrations exceed the permissible exposure limits to prevent contamination of the skin. Where protective clothing is required, your employer must provide you with clean garments. Unless you are working on a large asbestos removal or demolition project, your employer must also provide a change room and separate lockers for your street clothes and contaminated work clothes. If you are working on a large asbestos removal or demolition project, and where it is feasible to do so, your employer must provide a clean room, shower, and decontamination room contiguous to the work area. When leaving the work area, you must remove contaminated clothing before proceeding to the shower. If the shower is not adjacent to the work area, you must vacuum your clothing before proceeding to the change room and shower. To prevent inhaling fibers in contaminated change rooms and showers, leave your respirator on until you leave the shower and enter the clean change room.

(4) **Disposal procedures and cleanup**.

(a) Wastes that are generated by processes where asbestos is present include:

(i) Empty asbestos shipping containers.

(ii) Process wastes such as cuttings, trimmings, or reject material.

(iii) Housekeeping waste from sweeping or HEPA vacuuming.

(iv) Asbestos fireproofing or insulating material that is removed from buildings.

Building products that contain asbestos removed during building renovation or demolition.

(v) Contaminated disposable protective clothing.

(b) Empty shipping bags can be flattened under exhaust hoods and packed into airtight containers for disposal. Empty shipping drums are difficult to clean and should be sealed.

(c) Vacuum bags or disposable paper filters should not be cleaned, but should be sprayed with a fine water mist and placed into a labeled waste container.

(d) Process waste and housekeeping waste should be wetted with water or a mixture of water and surfactant prior to packaging in disposable containers.

(e) Material containing asbestos that is removed from buildings must be disposed of in leaktight 6-mil thick plastic bags, plastic-lined cardboard containers, or plastic-lined metal containers. These wastes, which are removed while wet, should be sealed in containers before they dry out to minimize the release of asbestos fibers during handling.

(5) **Access to information**.

(a) Each year, your employer is required to inform you of the information contained in this standard and appendices for asbestos. In addition, your employer must instruct you in the proper work practices for handling materials containing asbestos and the correct use of protective equipment.

(b) Your employer is required to determine whether you are being exposed to asbestos. You or your representative has the right to observe employee measurements and to record the results obtained. Your employer is required to inform you of your exposure, and, if you are exposed above the permissible limits, he or she is required to inform you of the actions that are being taken to reduce your exposure to within the permissible limits.

(c) Your employer is required to keep records of your exposures and medical examinations. These exposure records must be kept for at least thirty years. Medical records must be kept for the period of your employment plus thirty years.

(d) Your employer is required to release your exposure and medical records to your physician or designated representative upon your written request.

WAC 296-62-07749 Appendix H--Medical surveillance guidelines for asbestos--Nonmandatory.

(1) **Route of entry inhalation, ingestion**.

(2) **Toxicology**.

Clinical evidence of the adverse effects associated with exposure to asbestos is present in the form of several well-conducted epidemiological studies of occupationally exposed workers, family contacts of workers, and persons living near asbestos mines. These studies have shown a definite association between exposure to asbestos and an increased incidence of lung cancer, pleural and peretoneal mesothelioma, gastrointestinal cancer, and asbestosis. The latter is a disabling fibrotic lung disease that is caused only by exposure to asbestos. Exposure to asbestos has also been associated with an increased incidence of esophageal, kidney, laryngeal, pharyngeal, and buccal cavity cancers. As with other known chronic occupational diseases, disease associated with asbestos generally appears about twenty years following the first occurrence of exposure: There are no known acute effects associated with exposure to asbestos.

Epidemiological studies indicate that the risk of lung cancer among exposed workers who smoke cigarettes is greatly increased over the risk of lung cancer among nonexposed smokers or exposed nonsmokers. These studies suggest that cessation of smoking will reduce the risk of lung cancer for a person exposed to asbestos but will not reduce it to the same level of risk as that existing for an exposed worker who has never smoked.

(3) **Signs and symptoms of exposure-related disease**.

The signs and symptoms of lung cancer or gastrointestinal cancer induced by exposure to asbestos are not unique, except that a chest x-ray of an exposed patient with lung cancer may show pleural plaques, pleural calcification, or pleural fibrosis. Symptoms characteristic of mesothelioma include shortness of breath, pain in the walls of the chest, or abdominal pain. Mesothelioma has a much longer latency period compared with lung cancer (forty years versus fifteen to twenty years), and mesothelioma is therefore more likely to be found among workers who were first exposed to asbestos at an early age. Mesothelioma is always fatal.

Asbestosis is pulmonary fibrosis caused by the accumulation of asbestos fibers in the lungs. Symptoms include shortness of breath, coughing, fatigue, and vague feelings of sickness. When the fibrosis worsens, shortness of breath occurs even at rest. The diagnosis of asbestosis is based on a history of exposure to asbestos, the presence of characteristic radiologic changes, endinspiratory crackles (rales), and other clinical features of fibrosing lung disease. Pleural plaques and thickening are observed on x-rays taken during the early stages of the disease. Asbestosis is often a progressive disease even in the absence of continued exposure, although this appears to be a highly individualized characteristic. In severe cases, death may be caused by respiratory or cardiac failure.

(4) **Surveillance and preventive considerations**.

As noted above, exposure to asbestos has been linked to an increased risk of lung cancer, mesothelioma, gastrointestinal cancer, and asbestosis among occupationally exposed workers. Adequate screening tests to determine an employee's potential for developing serious chronic diseases, such as cancer, from exposure to asbestos do not presently exist. However, some tests, particularly chest x-rays and pulmonary function tests, may indicate that an employee has been overexposed to asbestos increasing their risk of developing exposure-related chronic diseases. It is important for the physician to become familiar with the operating conditions in which occupational exposure to asbestos is likely to occur. This is particularly important in evaluating medical and work histories and in conducting physical examinations. When an active employee has been identified as having been overexposed to asbestos measures taken by the employer to eliminate or mitigate further exposure should also lower the risk of serious long-term consequences.

The employer is required to institute a medical surveillance program for all employees who are or will be exposed to asbestos at or above the permissible exposure limits (0.1 fiber per cubic centimeter of air) for 30 or more days per year and for all employees who are assigned to wear a negative pressure respirator. All examinations and procedures must be performed by or under the supervision of a licensed physician, at a reasonable time and place, and at no cost to the employee.

Although broad latitude is given to the physician in prescribing specific tests to be included in the medical surveillance program, WISHA requires inclusion of the following elements in the routine examination:

(a) Medical and work histories with special emphasis directed to symptoms of the respiratory system, cardiovascular system, and digestive tract.

(b) Completion of the respiratory disease questionnaire contained in WAC 296-62-07741, Appendix D.

(c) A physical examination including a chest roentgenogram and pulmonary function test that includes measurement of the employee's forced vital capacity (FVC) and forced expiratory volume at one second (FEV1).

(d) Any laboratory or other test that the examining physician deems by sound medical practice to be necessary.

The employer is required to make the prescribed tests available at least annually to those employees covered; more often than specified if recommended by the examining physician; and upon termination of employment.

The employer is required to provide the physician with the following information: A copy of this standard and appendices; a description of the employee's duties as they relate to asbestos exposure; the employee's representative level of exposure to asbestos; a description of any personal protective and respiratory equipment used; and information from previous medical examinations of the affected employee that is not otherwise available to the physician. Making this information available to the physician will aid in the evaluation of the employee's health in relation to assigned duties and fitness to wear personal protective equipment, if required.

The employer is required to obtain a written opinion from the examining physician containing the results of the medical examination; the physician's opinion as to whether the employee has any detected medical conditions that would place the employee at an increased risk of exposure-related disease; any recommended limitations on the employee or on the use of personal protective equipment; and a statement that the employee has been informed by the physician of the results of the medical examination and of any medical conditions related to asbestos exposure that require further explanation or treatment. This written opinion must not reveal specific findings or diagnoses unrelated to exposure to asbestos and a copy of the opinion must be provided to the affected employee.

WAC 296-62-07751 Appendix I--Work practices and engineering controls for Class I asbestos operations--Nonmandatory.

This is a nonmandatory appendix to the asbestos standards for construction and for shipyards. It describes criteria and procedures for erecting and using negative pressure enclosures for Class I Asbestos Work, when NPEs are used as an allowable control method to comply with WAC 296-62-07712 (7)(a). Many small and variable details are involved in the erection of a negative pressure enclosure. OSHA and most participants in the rulemaking agreed that only the major, more performance oriented criteria should be made mandatory. These criteria are set out in WAC 296-62-07712.

In addition, this appendix includes these mandatory specifications and procedures in its guidelines in order to make this appendix coherent and helpful. The mandatory nature of the criteria which appear in the regulatory text is not changed because they are included in this “nonmandatory” appendix. Similarly, the additional criteria and procedures included as guidelines in the appendix, do not become mandatory because mandatory criteria are also included in these comprehensive guidelines.

In addition, none of the criteria, both mandatory and recommended, are meant to specify or imply the need for use of patented or licensed methods or equipment. Recommended specifications included in this attachment should not discourage the use of creative alternatives which can be shown to reliably achieve the objectives of negative-pressure enclosures.

Requirements included in this appendix, cover general provisions to be followed in all asbestos jobs, provisions which must be followed for all Class I asbestos jobs, and provisions governing the construction and testing of negative pressure enclosures. The first category includes the requirement for use of wet methods, HEPA vacuums, and immediate bagging of waste; Class I work must conform to the following provisions:

- oversight by competent person
- use of critical barriers over all openings to work area
- isolation of HVAC systems
- use of impermeable dropcloths and coverage of all objects within regulated areas

In addition, more specific requirements for NPEs include:

- maintenance of -0.02 inches water gauge within enclosure
- manometric measurements
- air movement away from employees performing removal work
- smoke testing or equivalent for detection of leaks and air direction
- deactivation of electrical circuits, if not provided with ground-fault circuit interrupters.

Planning the Project

The standard requires that an exposure assessment be conducted before the asbestos job is begun WAC 296-62-07709(3). Information needed for that assessment, includes data relating to prior similar jobs, as applied to the specific variables of the current job. The information needed to conduct the assessment will be useful in planning the project, and in complying with any reporting requirements under this standard, when significant changes are being made to a control system listed in the standard, (see WAC 296-62-07719), as well as those of USEPA (40 CFR Part 61, subpart M). Thus, although the standard does not explicitly require the preparation of a written asbestos removal plan, the usual constituents of such a plan, i.e., a description of the enclosure, the equipment, and the procedures to be used throughout the project, must be determined before the enclosure can be erected. The following information should be included in the planning of the system:

A physical description of the work area;

A description of the approximate amount of material to be removed;

A schedule for turning off and sealing existing ventilation systems;

Personnel hygiene procedures;

A description of personal protective equipment and clothing to be worn by employees;

A description of the local exhaust ventilation systems to be used and how they are to be tested;

A description of work practices to be observed by employees;

An air monitoring plan;

A description of the method to be used to transport waste material; and

The location of the dump site.

Materials and Equipment Necessary for Asbestos Removal

Although individual asbestos removal projects vary in terms of the equipment required to accomplish the removal of the materials, some equipment and materials are common to most asbestos removal operations.

Plastic sheeting used to protect horizontal surfaces, seal HVAC openings or to seal vertical openings and ceilings should have a minimum thickness of 6 mils. Tape or other adhesive used to attach plastic sheeting should be of sufficient adhesive strength to support the weight of the material plus all stresses encountered during the entire duration of the project without becoming detached from the surface.

Other equipment and materials which should be available at the beginning of each project are:

- HEPA Filtered Vacuum is essential for cleaning the work area after the asbestos has been removed. It should have a long hose capable of reaching out-of-the-way places, such as areas above ceiling tiles, behind pipes, etc.
- Portable air ventilation systems installed to provide the negative air pressure and air removal from the enclosure must be equipped with a HEPA filter. The number and capacity of units required to ventilate an enclosure depend on the size of the area to be ventilated. The filters for these systems should be designed in such a manner that they can be replaced when the air flow volume is reduced by the build-up of dust in the filtration material. Pressure monitoring devices with alarms and strip chart recorders attached to each system to indicate the pressure differential and the loss due to dust buildup on the filter are recommended.
- Water sprayers should be used to keep the asbestos material as saturated as possible during removal; the sprayers will provide a fine mist that minimizes the impact of the spray on the material.
- Water used to saturate the asbestos containing material can be amended by adding at least 15 milliliters (0.5 ounce) of wetting agent in 1 liter (1 pint) of water. An example of a wetting agent is a 50/50 mixture of polyoxyethylene ether and polyoxyethylene polyglycol ester.
- Backup power supplies are recommended, especially for ventilation systems.
- Shower and bath water should be with mixed hot and cold water faucets. Water that has been used to clean personnel or equipment should either be filtered or be collected and discarded as asbestos waste. Soap and shampoo should be provided to aid in removing dust from the workers' skin and hair.
- See WAC 296-62-07715 and 296-62-07717 for appropriate respiratory protection and protective clothing.
- See WAC 296-62-07721 for required signs and labels.

Preparing the Work Area

Disabling HVAC Systems: The power to the heating, ventilation, and air conditioning systems that service the restricted area must be deactivated and locked off. All ducts, grills, access ports, windows and vents must be sealed off with two layers of plastic to prevent entrainment of contaminated air.

Operating HVAC Systems in the Restricted Area: If components of a HVAC system located in the restricted area are connected to a system that will service another zone during the project, the portion of the duct in the restricted area must be sealed and pressurized. Necessary precautions include caulking the duct joints, covering all cracks and openings with two layers of sheeting, and pressurizing the duct throughout the duration of the project by restricting the return air flow. The power to the fan supplying the positive pressure should be locked “on” to prevent pressure loss.

Sealing Elevators: If an elevator shaft is located in the restricted area, it should be either shut down or isolated by sealing with two layers of plastic sheeting. The sheeting should provide enough slack to accommodate the pressure changes in the shaft without breaking the air-tight seal.

Removing Mobile Objects: All movable objects should be cleaned and removed from the work area before an enclosure is constructed unless moving the objects creates a hazard. Mobile objects will be assumed to be contaminated and should be either cleaned with amended water and a HEPA vacuum and then removed from the area or wrapped and then disposed of as hazardous waste.

Cleaning and Sealing Surfaces: After cleaning with water and a HEPA vacuum, surfaces of stationary objects should be covered with two layers of plastic sheeting. The sheeting should be secured with duct tape or an equivalent method to provide a tight seal around the object.

Bagging Waste: In addition to the requirement for immediate bagging of waste for disposal, it is further recommended that the waste material be double-bagged and sealed in plastic bags designed for asbestos disposal. The bags should be stored in a waste storage area that can be controlled by the workers conducting the removal. Filters removed from air handling units and rubbish removed from the area are to be bagged and handled as hazardous waste.

Constructing the Enclosure

The enclosure should be constructed to provide an air-tight seal around ducts and openings into existing ventilation systems and around penetrations for electrical conduits, telephone wires, water lines, drain pipes, etc. Enclosures should be both airtight and watertight except for those openings designed to provide entry and/or air flow control.

Size: An enclosure should be the minimum volume to encompass all of the working surfaces yet allow unencumbered movement by the worker(s), provide unrestricted air flow past the worker(s), and ensure walking surfaces can be kept free of tripping hazards.

Shape: The enclosure may be any shape that optimizes the flow of ventilation air past the worker(s).

Structural Integrity: The walls, ceilings and floors must be supported in such a manner that portions of the enclosure will not fall down during normal use.

Openings: It is not necessary that the structure be airtight; openings may be designed to direct air flow. Such openings should be located at a distance from active removal operations. They should be designed to draw air into the enclosure under all anticipated circumstances. In the event that negative pressure is lost, they should be fitted with either HEPA filters to trap dust or automatic trap doors that prevent dust from escaping the enclosure. Openings for exits should be controlled by an airlock or a vestibule.

Barrier Supports: Frames should be constructed to support all unsupported spans of sheeting.

Sheeting: Walls, barriers, ceilings, and floors should be lined with two layers of plastic sheeting having a thickness of at least 6 mil.

Seams: Seams in the sheeting material should be minimized to reduce the possibilities of accidental rips and tears in the adhesive or connections. All seams in the sheeting should overlap, be staggered and not be located at corners or wall-to-floor joints.

Areas Within an Enclosure: Each enclosure consists of a work area, a decontamination area, and waste storage area. The work area where the asbestos removal operations occur should be separated from both the waste storage area and the contamination control area by physical curtains, doors, and/or airflow patterns that force any airborne contamination back into the work area.

See WAC 296-62-07719 for requirements for hygiene facilities.

During egress from the work area, each worker should step into the equipment room, clean tools and equipment, and remove gross contamination from clothing by wet cleaning and HEPA vacuuming. Before entering the shower area, foot coverings, head coverings, hand coverings, and coveralls are removed and placed in impervious bags for disposal or cleaning. Airline connections from airline respirators with HEPA disconnects and power cables from powered air-purifying respirators (PAPRs) will be disconnected just prior to entering the shower room.

Establishing Negative Pressure Within the Enclosure

Negative Pressure: Air is to be drawn into the enclosure under all anticipated conditions and exhausted through a HEPA filter for 24 hours a day during the entire duration of the project.

Air Flow Tests: Air flow patterns will be checked before removal operations begin, at least once per operating shift and any time there is a question regarding the integrity of the enclosure. The primary test for air flow is to trace air currents with smoke tubes or other visual methods. Flow checks are made at each opening and at each doorway to demonstrate that air is being drawn into the enclosure and at each worker's position to show that air is being drawn away from the breathing zone.

Monitoring Pressure Within the Enclosure: After the initial air flow patterns have been checked, the static pressure must be monitored within the enclosure. Monitoring may be made using manometers, pressure gauges, or combinations of these devices. It is recommended that they be attached to alarms and strip chart recorders at points identified by the design engineer.

Corrective Actions: If the manometers or pressure gauges demonstrate a reduction in pressure differential below the required level, work should cease and the reason for the change investigated and appropriate changes made. The air flow patterns should be retested before work begins again.

Pressure Differential: The design parameters for static pressure differentials between the inside and outside of enclosures typically range from 0.02 to 0.10 inches of water gauge, depending on conditions. All zones inside the enclosure must have less pressure than the ambient pressure outside of the enclosure (-0.02 inches water gauge differential). Design specifications for the differential vary according to the size, configuration, and shape of the enclosure as well as ambient and mechanical air pressure conditions around the enclosure.

Air Flow Patterns: The flow of air past each worker shall be enhanced by positioning the intakes and exhaust ports to remove contaminated air from the worker's breathing zone, by positioning HEPA vacuum cleaners to draw air from the worker's breathing zone, by forcing relatively uncontaminated air past the worker toward an exhaust port, or by using a combination of methods to reduce the worker's exposure.

Air Handling Unit Exhaust: The exhaust plume from air handling units should be located away from adjacent personnel and intakes for HVAC systems.

Air Flow Volume: The air flow volume (cubic meters per minute) exhausted (removed) from the workplace must exceed the amount of makeup air supplied to the enclosure. The rate of air exhausted from the enclosure should be designed to maintain a negative pressure in the enclosure and air movement past each worker. The volume of air flow removed from the enclosure should replace the volume of the container at every 5 to 15 minutes. Air flow volume will need to be relatively high for large enclosures, enclosures with awkward shapes, enclosures with multiple openings, and operations employing several workers in the enclosure.

Air Flow Velocity: At each opening, the air flow velocity must visibly "drag" air into the enclosure. The velocity of air flow within the enclosure must be adequate to remove airborne contamination from each worker's breathing zone without disturbing the asbestos-containing material on surfaces.

Airlocks: Airlocks are mechanisms on doors and curtains that control the air flow patterns in the doorways. If air flow occurs, the patterns through doorways must be such that the air flows toward the inside of the enclosure. Sometimes vestibules, double doors, or double curtains are used to prevent air movement through the doorways. To use a vestibule, a worker enters a chamber by opening the door or curtain and then closing the entry before opening the exit door or curtain.

Airlocks should be located between the equipment room and shower room, between the shower room and the clean room, and between the waste storage area and the outside of the enclosure. The air flow between adjacent rooms must be checked using smoke tubes or other visual tests to ensure the flow patterns draw air toward the work area without producing eddies.

Monitoring for Airborne Concentrations

In addition to the breathing zone samples taken as outlined in WAC 296-62-07709, samples of air should be taken to demonstrate the integrity of the enclosure, the cleanliness of the clean room and shower area, and the effectiveness of the HEPA filter. If the clean room is shown to be contaminated, the room must be relocated to an uncontaminated area.

Samples taken near the exhaust of portable ventilation systems must be done with care.

General Work Practices

Preventing dust dispersion is the primary means of controlling the spread of asbestos within the enclosure. Whenever practical, the point of removal should be isolated, enclosed, covered, or shielded from the workers in the area. Waste asbestos containing materials must be bagged during or immediately after removal; the material must remain saturated until the waste container is sealed.

Waste material with sharp points or corners must be placed in hard air-tight containers rather than bags.

Whenever possible, large components should be sealed in plastic sheeting and removed intact.

Bags or containers of waste will be moved to the waste holding area, washed, and wrapped in a bag with the appropriate labels.

Cleaning the Work Area

Surfaces within the work area should be kept free of visible dust and debris to the extent feasible. Whenever visible dust appears on surfaces, the surfaces within the enclosure must be cleaned by wiping with a wet sponge, brush, or cloth and then vacuumed with a HEPA vacuum.

All surfaces within the enclosure should be cleaned before the exhaust ventilation system is deactivated and the enclosure is disassembled. An approved encapsulant may be sprayed onto areas after the visible dust has been removed.

WAC 296-62-07753 Appendix J--Polarized light microscopy of asbestos--Nonmandatory.

Method number: ID-191

Matrix: Bulk

Collection Procedure

Collect approximately 1 to 2 grams of each type of material and place into separate 20 mL scintillation vials.

Analytical Procedure

A portion of each separate phase is analyzed by gross examination, phase-polar examination, and central stop dispersion microscopy.

Commercial manufacturers and products mentioned in this method are for descriptive use only and do not constitute endorsements by USDOL-WISHA. Similar products from other sources may be substituted.

(1) **Introduction**

This method describes the collection and analysis of asbestos bulk materials by light microscopy techniques including phase- polar illumination and central-stop dispersion microscopy. Some terms unique to asbestos analysis are defined below:

Amphibole: A family of minerals whose crystals are formed by long, thin units which have two thin ribbons of double chain silicate with a brucite ribbon in between. The shape of each unit is similar to an "I beam." Minerals important in asbestos analysis include cummingtonite-grunerite, crocidolite, tremolite-actinolite and anthophyllite.

Asbestos: A term for naturally occurring fibrous minerals. Asbestos includes chrysotile, cummingtonite-grunerite asbestos (amosite), anthophyllite asbestos, tremolite asbestos, crocidolite, actinolite asbestos and any of these minerals which have been chemically treated or altered. The precise chemical formulation of each species varies with the location from which it was mined. Nominal compositions are listed:

Chrysotile	$Mg_3Si_2O_5(OH)_4$
Crocidolite (Riebeckite asbestos)	$Na_2Fe_3^{2+}Fe_2^{3+}Si_8O_{22}(OH)_2$
Cummingtonite-Grunerite asbestos (Amosite)	$(Mg,Fe)_7Si_8O_{22}(OH)_2$
Tremolite-Actinolite asbestos	$Ca_2(Mg,Fe)_5Si_8O_{22}(OH)_2$
Anthophyllite asbestos	$(Mg,Fe)_7Si_8O_{22}(HO)_2$

Asbestos Fiber: A fiber of asbestos meeting the criteria for

a fiber. (See section (3)(e))

Aspect Ratio: The ratio of the length of a fiber to its diameter usually defined as "length: width", e.g. 3:1.

Brucite: A sheet mineral with the composition $mg(OH)_2$.

Central Stop Dispersion Staining (microscope): This is a dark field microscope technique that images particles using only light refracted by the particle, excluding light that travels through the particle unrefracted. This is usually accomplished with a McCrone objective or other arrangement which places a circular stop with apparent aperture equal to the objective aperture in the back focal plane of the microscope.

Cleavage Fragments: Mineral particles formed by the comminution of minerals, especially those characterized by relatively parallel sides and moderate aspect ratio.

Differential Counting: The term applied to the practice of excluding certain kinds of fibers from a phase contrast asbestos count because they are not asbestos.

Fiber: A particle longer than or equal to 5 microns with a length to width ratio greater than or equal to 3:1. This may include cleavage fragments. (See section (3)(e) of this appendix).

Phase Contrast: Contrast obtained in the microscope by causing light scattered by small particles to destructively interfere with unscattered light, thereby enhancing the visibility of very small particles and particles with very low intrinsic contrast.

Phase Contrast Microscope: A microscope configured with a phase mask pair to create phase contrast. The technique which uses this is called Phase Contrast Microscopy (PCM).

Phase-Polar Analysis: This is the use of polarized light in a phase contrast microscope. It is used to see the same size fibers that are visible in air filter analysis. Although fibers finer than 1 micron are visible, analysis of these is inferred from analysis of larger bundles that are usually present.

Phase-Polar Microscope: The phase-polar microscope is a phase contrast microscope which has an analyzer, a polarizer, a first order red plate and a rotating phase condenser all in place so that the polarized light image is enhanced by phase contrast.

Sealing Encapsulant: This is a product which can be applied, preferably by spraying, onto an asbestos surface which will seal the surface so that fibers cannot be released.

Serpentine: A mineral family consisting of minerals with the general composition $Mg_3(Si_2O_5(OH)_4$ having the magnesium in brucite layer over a silicate layer. Minerals important in asbestos analysis included in this family are chrysotile, lizardite, antigorite.

(a) History

Light microscopy has been used for well over 100 years for the determination of mineral species. This analysis is carried out using specialized polarizing microscopes as well as bright field microscopes. The identification of minerals is an on-going process with many new minerals described each year. The first recorded use of asbestos was in Finland about 2500 B.C. where the material was used in the mud wattle for the wooden huts the people lived in as well as strengthening for pottery. Adverse health aspects of the mineral were noted nearly 2000 years ago when Pliny the Younger wrote about the poor health of slaves in the asbestos mines. Although known to be injurious for centuries, the first modern references to its toxicity were by the British Labor Inspectorate when it banned asbestos dust from the workplace in 1898. Asbestosis cases were described in the literature after the turn of the century.

Cancer was first suspected in the mid 1930's and a causal link to mesothelioma was made in 1965. Because of the public concern for worker and public safety with the use of this material, several different types of analysis were applied to the determination of asbestos content. Light microscopy requires a great deal of experience and craft. Attempts were made to apply less subjective methods to the analysis. X-ray diffraction was partially successful in determining the mineral types but was unable to separate out the fibrous portions from the nonfibrous portions. Also, the minimum detection limit for asbestos analysis by X-ray diffraction (XRD) is about 1%. Differential Thermal Analysis (DTA) was no more successful. These provide useful corroborating information when the presence of asbestos has been shown by microscopy; however, neither can determine the difference between fibrous and nonfibrous minerals when both habits are present. The same is true of Infrared Absorption (IR).

When electron microscopy was applied to asbestos analysis, hundreds of fibers were discovered present too small to be visible in any light microscope. There are two different types of electron microscopes used for asbestos analysis: Scanning Electron Microscope (SEM) and Transmission Electron Microscope (TEM). Scanning Electron Microscopy is useful in identifying minerals. The SEM can provide two of the three pieces of information required to identify fibers by electron microscopy: Morphology and chemistry. The third is structure as determined by Selected Area Electron Diffraction-SAED which is performed in the TEM. Although the resolution of the SEM is sufficient for very fine fibers to be seen, accuracy of chemical analysis that can be performed on the fibers varies with fiber diameter in fibers of less than 0.2 micron diameter. The TEM is a powerful tool to identify fibers too small to be resolved by light microscopy and should be used in conjunction with this method when necessary. The TEM can provide all three pieces of information required for fiber identification. Most fibers thicker than 1 micron can adequately be defined in the light microscope. The light microscope remains as the best instrument for the determination of mineral type. This is because the minerals under investigation were first described analytically with the light microscope. It is inexpensive and gives positive identification for most samples analyzed. Further, when optical techniques are inadequate, there is ample indication that alternative techniques should be used for complete identification of the sample.

(b) Principle

Minerals consist of atoms that may be arranged in random order or in a regular arrangement. Amorphous materials have atoms in random order while crystalline materials have long range order. Many materials are transparent to light, at least for small particles or for thin sections. The properties of these materials can be investigated by the effect that the material has on light passing through it. The six asbestos minerals are all crystalline with particular properties that have been identified and cataloged. These six minerals are anisotropic. They have a regular array of atoms, but the arrangement is not the same in all directions. Each major direction of the crystal presents a different regularity. Light photons traveling in each of these main directions will encounter different electrical neighborhoods, affecting the path and time of travel. The techniques outlined in this method use the fact that light traveling through fibers or crystals in different directions will behave differently,

but predictably. The behavior of the light as it travels through a crystal can be measured and compared with known or determined values to identify the mineral species. Usually, Polarized Light Microscopy (PLM) is performed with strain-free objectives on a bright-field microscope platform. This would limit the resolution of the microscope to about 0.4 micron. Because WISHA requires the counting and identification of fibers visible in phase contrast, the phase contrast platform is used to visualize the fibers with the polarizing elements added into the light path. Polarized light methods cannot identify fibers finer than about 1 micron in diameter even though they are visible. The finest fibers are usually identified by inference from the presence of larger, identifiable fiber bundles. When fibers are present, but not identifiable by light microscopy, use either SEM or TEM to determine the fiber identity.

(c) Advantages and Disadvantages

The advantages of light microscopy are:

(i) Basic identification of the materials was first performed by light microscopy and gross analysis. This provides a large base of published information against which to check analysis and analytical technique.

(ii) The analysis is specific to fibers. The minerals present can exist in asbestiform, fibrous, prismatic, or massive varieties all at the same time. Therefore, bulk methods of analysis such as X-ray diffraction, IR analysis, DTA, etc. are inappropriate where the material is not known to be fibrous.

(iii) The analysis is quick, requires little preparation time, and can be performed on-site if a suitably equipped microscope is available.

The disadvantages are:

(iv) Even using phase-polar illumination, not all the fibers present may be seen. This is a problem for very low asbestos concentrations where agglomerations or large bundles of fibers may not be present to allow identification by inference.

(v) The method requires a great degree of sophistication on the part of the microscopist. An analyst is only as useful as his mental catalog of images. Therefore, a microscopist's accuracy is enhanced by experience. The mineralogical training of the analyst is very important. It is the basis on which subjective decisions are made.

(vi) The method uses only a tiny amount of material for analysis. This may lead to sampling bias and false results (high or low). This is especially true if the sample is severely inhomogeneous.

(vii) Fibers may be bound in a matrix and not distinguishable as fibers so identification cannot be made.

(d) Method Performance

(i) This method can be used for determination of asbestos content from 0 to 100% asbestos. The detection limit has not been adequately determined, although for selected samples, the limit is very low, depending on the number of particles examined. For mostly homogeneous, finely divided samples, with no difficult fibrous interferences, the detection limit is below 1%. For inhomogeneous samples (most samples), the detection limit remains undefined. NIST has conducted proficiency testing of laboratories on a national scale. Although each round is reported statistically with an average, control limits, etc., the results indicate a difficulty in establishing precision especially in the low concentration range. It is suspected that there is significant bias in the low range especially near 1%. EPA tried to remedy this by requiring a mandatory point counting scheme for samples less than 10%. The point counting procedure is tedious, and may introduce significant biases of its own. It has not been incorporated into this method.

(ii) The precision and accuracy of the quantitation tests performed in this method are unknown. Concentrations are easier to determine in commercial products where asbestos was deliberately added because the amount is usually more than a few percent. An analyst's results can be “calibrated” against the known amounts added by the manufacturer. For geological samples, the degree of homogeneity affects the precision.

(iii) The performance of the method is analyst dependent. The analyst must choose carefully and not necessarily randomly the portions for analysis to assure that detection of asbestos occurs when it is present. For this reason, the analyst must have adequate training in sample preparation, and experience in the location and identification of asbestos in samples. This is usually accomplished through substantial on-the-job training as well as formal education in mineralogy and microscopy.

(e) Interferences

Any material which is long, thin, and small enough to be viewed under the microscope can be considered an interference for asbestos. There are literally hundreds of interferences in workplaces. The techniques described in this method are normally sufficient to eliminate the interferences. An analyst's success in eliminating the interferences depends on proper training.

Asbestos minerals belong to two mineral families: The serpentines and the amphiboles. In the serpentine family, the only common fibrous mineral is chrysotile. Occasionally, the mineral antigorite occurs in a fibril habit with morphology similar to the amphiboles. The amphibole minerals consist of a score of different minerals of which only five are regulated by federal standard: Amosite, crocidolite, anthophyllite asbestos, tremolite asbestos and actinolite asbestos. These are the only amphibole minerals that have been commercially exploited for their fibrous properties; however, the rest can and do occur occasionally in asbestiform habit.

In addition to the related mineral interferences, other minerals common in building material may present a problem for some microscopists: Gypsum, anhydrite, brucite, quartz fibers, talc fibers or ribbons, wollastonite, perlite, attapulgite, etc. Other fibrous materials commonly present in workplaces are: Fiberglass, mineral wool, ceramic wool, refractory ceramic fibers, kevlar, nomex, synthetic fibers, graphite or carbon fibers, cellulose (paper or wood) fibers, metal fibers, etc.

Matrix embedding material can sometimes be a negative interference. The analyst may not be able to easily extract the fibers from the matrix in order to use the method. Where possible, remove the matrix before the analysis, taking careful note of the loss of weight. Some common matrix materials are: Vinyl, rubber, tar, paint, plant fiber, cement, and epoxy. A further negative interference is that the asbestos fibers themselves may be either too small to be seen in Phase Contrast Microscopy (PCM) or of a very low fibrous quality, having the appearance of plant fibers. The analyst's ability to deal with these materials increases with experience.

(f) Uses and Occupational Exposure

Asbestos is ubiquitous in the environment. More than 40% of the land area of the United States is composed of minerals which may contain asbestos. Fortunately, the actual formation of great amounts of asbestos is relatively rare. Nonetheless, there are locations in which environmental exposure can be severe such as in the Serpentine Hills of California.

There are thousands of uses for asbestos in industry and the home. Asbestos abatement workers are the most current segment of the population to have occupational exposure to great amounts of asbestos. If the material is undisturbed, there is no exposure. Exposure occurs when the asbestos-containing material is abraded or otherwise disturbed during maintenance operations or some other activity. Approximately 95% of the asbestos in place in the United States is chrysotile.

Amosite and crocidolite make up nearly all the difference. Tremolite and anthophyllite make up a very small percentage. Tremolite is found in extremely small amounts in certain chrysotile deposits. Actinolite exposure is probably greatest from environmental sources, but has been identified in vermiculite containing, sprayed-on insulating materials which may have been certified as asbestos-free.

(g) Physical and Chemical Properties

The nominal chemical compositions for the asbestos minerals were given in subsection (1). Compared to cleavage fragments of the same minerals, asbestiform fibers possess a high tensile strength along the fiber axis. They are chemically inert, noncombustible, and heat resistant.

Except for chrysotile, they are insoluble in Hydrochloric acid (HCl). Chrysotile is slightly soluble in HCl. Asbestos has high electrical resistance and good sound absorbing characteristics. It can be woven into cables, fabrics or other textiles, or matted into papers, felts, and mats.

(h) Toxicology (This Section is for Information Only and Should Not Be Taken as WISHA Policy).

Possible physiologic results of respiratory exposure to asbestos are mesothelioma of the pleura or peritoneum, interstitial fibrosis, asbestosis, pneumoconiosis, or respiratory cancer. The possible consequences of asbestos exposure are detailed in the NIOSH Criteria Document or in the WISHA Asbestos Standards, WAC 296-62-077.

(2) **Sampling Procedure**

(a) Equipment for Sampling

(i) Tube or cork borer sampling device

(ii) Knife

(iii) 20 mL scintillation vial or similar vial

(iv) Sealing encapsulant

(b) Safety Precautions

Asbestos is a known carcinogen. Take care when sampling. While in an asbestos-containing atmosphere, a properly selected and fit-tested respirator should be worn. Take samples in a manner to cause the least amount of dust. Follow these general guidelines:

(i) Do not make unnecessary dust.

(ii) Take only a small amount (1 to 2 g).

(iii) Tightly close the sample container.

(iv) Use encapsulant to seal the spot where the sample was taken, if necessary.

(c) Sampling procedure

Samples of any suspect material should be taken from an inconspicuous place. Where the material is to remain, seal the sampling wound with an encapsulant to eliminate the potential for exposure from the sample site. Microscopy requires only a few milligrams of material. The amount that will fill a 20 mL scintillation vial is more than adequate. Be sure to collect samples from all layers and phases of material. If possible, make separate samples of each different phase of the material. This will aid in determining the actual hazard. do not use envelopes, plastic or paper bags of any kind to collect samples. The use of plastic bags presents a contamination hazard to laboratory personnel and to other samples. When these containers are opened, a bellows effect blows fibers out of the container onto everything, including the person opening the container.

If a cork-borer type sampler is available, push the tube through the material all the way, so that all layers of material are sampled. Some samplers are intended to be disposable. These should be capped and sent to the laboratory. If a nondisposable cork borer is used, empty the contents into a scintillation vial and send to the laboratory. Vigorously and completely clean the cork borer between samples.

(d) Shipment

Samples packed in glass vials must not touch or they might break in shipment.

(i) Seal the samples with a sample seal over the end to guard against tampering and to identify the sample.

(ii) Package the bulk samples in separate packages from the air samples. They may cross-contaminate each other and will invalidate the results of the air samples.

(iii) Include identifying paperwork with the samples, but not in contact with the suspected asbestos.

(iv) To maintain sample accountability, ship the samples by certified mail, overnight express, or hand carry them to the laboratory.

(3) **Analysis**

The analysis of asbestos samples can be divided into two major parts: Sample preparation and microscopy. Because of the different asbestos uses that may be encountered by the analyst, each sample may need different preparation steps. The choices are outlined below. There are several different tests that are performed to identify the asbestos species and determine the percentage. They will be explained below.

(a) Safety

(i) Do not create unnecessary dust. Handle the samples in HEPA-filter equipped hoods. If samples are received in bags, envelopes or other inappropriate container, open them only in a hood having a face velocity at or greater than 100 fpm. Transfer a small amount to a scintillation vial and only handle the smaller amount.

(ii) Open samples in a hood, never in the open lab area.

(iii) Index of refraction oils can be toxic. Take care not to get this material on the skin. Wash immediately with soap and water if this happens.

(iv) Samples that have been heated in the muffle furnace or the drying oven may be hot. Handle them with tongs until they are cool enough to handle.

(v) Some of the solvents used, such as THF (tetrahydrofuran), are toxic and should only be handled in an appropriate fume hood and according to instructions given in the Safety Data Sheet (SDS).

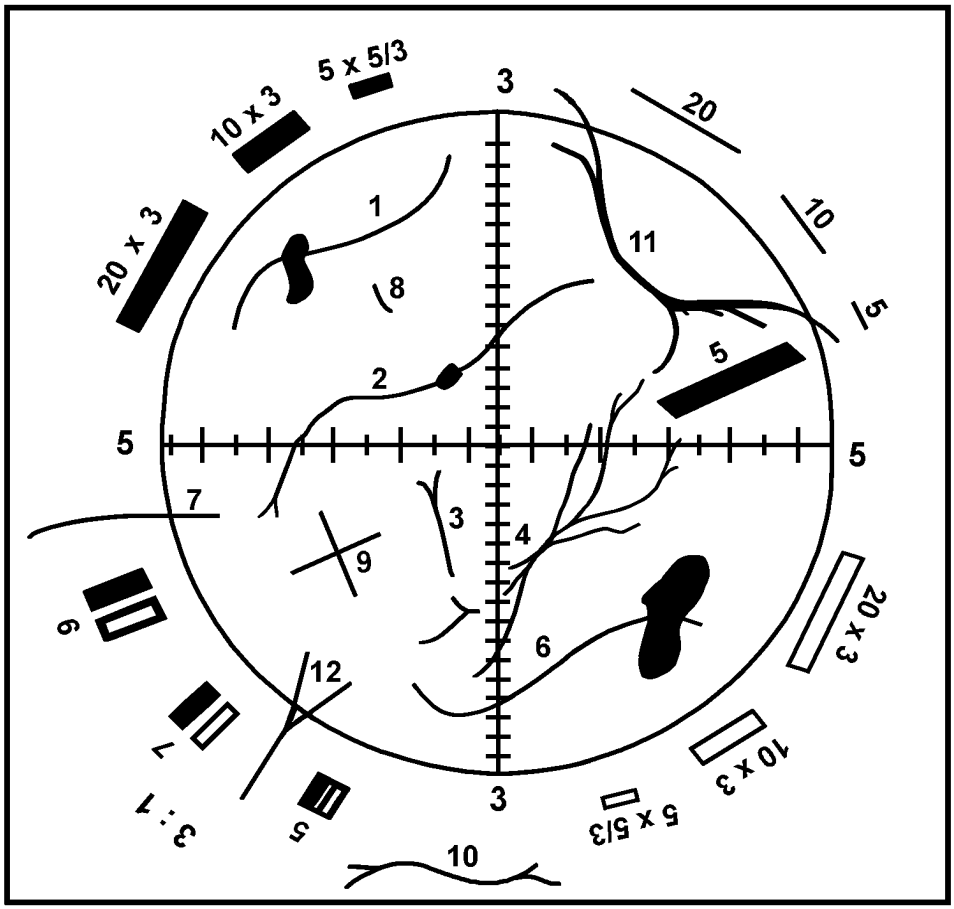

Figure 1: Walton-Beckett Graticule with some explanatory fibers.
Counts for the Fibers in the Figure

Structure No.	*Count*	*Explanation*
1 to 6	1	Single fibers all contained within the circle.
7	1/2	Fiber crosses circle once.
8	0	Fiber too short.
9	2	Two crossing fibers.
10	0	Fiber outside graticule.
11	0	Fiber crosses graticule twice.
12	1/2	Although split, fiber only crosses once.

(b) Equipment

(i) Phase contrast microscope with 10x, 16x and 40x objectives, 10x wide-field eyepieces, G-22 Walton-Beckett graticule, Whipple disk, polarizer, analyzer and first order red or gypsum plate, 100 Watt illuminator, rotating position condenser with oversize phase rings, central stop dispersion objective, Kohler illumination and a rotating mechanical stage. (See Figure 1).

(ii) Stereo microscope with reflected light illumination, transmitted light illumination, polarizer, analyzer and first order red or gypsum plate, and rotating stage.

(iii) Negative pressure hood for the stereo microscope

(iv) Muffle furnace capable of 600 degrees C

(v) Drying oven capable of 50-150 degrees C

(vi) Aluminum specimen pans

(vii) Tongs for handling samples in the furnace

(viii) High dispersion index of refraction oils (Special for dispersion staining.)

n = 1.550
n = 1.585
n = 1.590
n = 1.605
n = 1.620
n = 1.670
n = 1.680
n = 1.690

(ix) A set of index of refraction oils from about n = 1.350 to n = 2.000 in n = 0.005 increments. (Standard for Becke line analysis.)

(x) Glass slides with painted or frosted ends 1 x 3 inches 1mm thick, precleaned.

(xi) Cover Slips 22 x 22 mm, #1 1/2

(xii) Paper clips or dissection needles

(xiii) Hand grinder

(xiv) Scalpel with both #10 and #11 blades

(xv) 0.1 molar HCl

(xvi) Decalcifying solution (Baxter Scientific Products) Ethylenediaminetetraacetic Acid,

(xvii) Tetrasodium....0.7 g/l

Sodium Potassium Tartrate....8.0 mg/liter
Hydrochloric Acid....99.2 g/liter
Sodium Tartrate....0.14 g/liter
Tetrahydrofuran (THF)

(xviii) Hotplate capable of 60 degrees C

(xix) Balance

(xx) Hacksaw blade

(xxi) Ruby mortar and pestle

(c) Sample Pre-Preparation

Sample preparation begins with pre-preparation which may include chemical reduction of the matrix, heating the sample to dryness or heating in the muffle furnace. The end result is a sample which has been reduced to a powder that is sufficiently fine to fit under the cover slip. Analyze different phases of samples separately, e.g., tile and the tile mastic should be analyzed separately as the mastic may contain asbestos while the tile may not.

(i) Wet Samples

Samples with a high water content will not give the proper dispersion colors and must be dried prior to sample mounting. Remove the lid of the scintillation vial, place the bottle in the drying oven and heat at 100 degrees C to dryness (usually about 2 h). Samples which are not submitted to the lab in glass must be removed and placed in glass vials or aluminum weighing pans before placing them in the drying oven.

(ii) Samples With Organic Interference-Muffle Furnace

These may include samples with tar as a matrix, vinyl asbestos tile, or any other organic that can be reduced by heating. Remove the sample from the vial and weigh in a balance to determine the weight of the submitted portion. Place the sample in a muffle furnace at 500 degrees C for 1 to 2 h or until all obvious organic material has been removed. Retrieve, cool and weigh again to determine the weight loss on ignition. This is necessary to determine the asbestos content of the submitted sample, because the analyst will be looking at a reduced sample.

Notes: Heating above 600 degrees C will cause the sample to undergo a structural change which, given sufficient time, will convert the chrysotile to forsterite. Heating even at lower temperatures for 1 to 2 h may have a measurable effect on the optical properties of the minerals. If the analyst is unsure of what to expect, a sample of standard asbestos should be heated to the same temperature for the same length of time so that it can be examined for the proper interpretation.

(iii) Samples With Organic Interference-THF

Vinyl asbestos tile is the most common material treated with this solvent, although, substances containing tar will sometimes yield to this treatment. Select a portion of the material and then grind it up if possible. Weigh the sample and place it in a test tube. Add sufficient THF to dissolve the organic matrix. This is usually about 4 to 5 mL. Remember, THF is highly flammable. Filter the remaining material through a tared silver membrane, dry and weigh to determine how much is left after the solvent extraction. Further process the sample to remove carbonate or mount directly.

(iv) Samples With Carbonate Interference

Carbonate material is often found on fibers and sometimes must be removed in order to perform dispersion microscopy. Weigh out a portion of the material and place it in a test tube. Add a sufficient amount of 0.1 M HCl or decalcifying solution in the tube to react all the carbonate as evidenced by gas formation; i.e., when the gas bubbles stop, add a little more solution. If no more gas forms, the reaction is complete. Filter the material out through a tared silver membrane, dry and weigh to determine the weight lost.

(d) Sample Preparation

Samples must be prepared so that accurate determination can be made of the asbestos type and amount present. The following steps are carried out in the low-flow hood (a low-flow hood has less than 50 fpm flow):

(i) If the sample has large lumps, is hard, or cannot be made to lie under a cover slip, the grain size must be reduced. Place a small amount between two slides and grind the material between them or grind a small amount in a clean mortar and pestle. The choice of whether to use an alumina, ruby, or diamond mortar depends on the hardness of the material. Impact damage can alter the asbestos mineral if too much mechanical shock occurs. (Freezer mills can completely destroy the observable crystallinity of asbestos and should not be used). For some samples, a portion of material can be shaved off with a scalpel, ground off with a hand grinder or hacksaw blade.

The preparation tools should either be disposable or cleaned thoroughly. Use vigorous scrubbing to loosen the fibers during the washing. Rinse the implements with copious amounts of water and air-dry in a dust-free environment.

(ii) If the sample is powder or has been reduced as in (i) above, it is ready to mount. Place a glass slide on a piece of optical tissue and write the identification on the painted or frosted end. Place two drops of index of refraction medium n = 1.550 on the slide. (The medium n = 1.550 is chosen because it is the matching index for chrysotile.) Dip the end of a clean paper-clip or dissecting needle into the droplet of refraction medium on the slide to moisten it. Then dip the probe into the powder sample. Transfer what sticks on the probe to the slide. The material on the end of the probe should have a diameter of about 3 mm for a good mount. If the material is very fine, less sample may be appropriate. For nonpowder samples such as fiber mats, forceps should be used to transfer a small amount of material to the slide. Stir the material in the medium on the slide, spreading it out and making the preparation as uniform as possible. Place a cover-slip on the preparation by gently lowering onto the slide and allowing it to fall “trapdoor fashion” on the preparation to push out any bubbles. Press gently on the cover slip to even out the distribution of particulate on the slide. If there is insufficient mounting oil on the slide, one or two drops may be placed near the edge of the coverslip on the slide. Capillary action will draw the necessary amount of liquid into the preparation. Remove excess oil with the point of a laboratory wiper.

Treat at least two different areas of each phase in this fashion. Choose representative areas of the sample. It may be useful to select particular areas or fibers for analysis. This is useful to identify asbestos in severely inhomogeneous samples.

When it is determined that amphiboles may be present, repeat the above process using the appropriate high-dispersion oils until an identification is made or all six asbestos minerals have been ruled out. Note that percent determination must be done in the index medium 1.550 because amphiboles tend to disappear in their matching mediums.

(e) Analytical procedure

Note: This method presumes some knowledge of mineralogy and optical petrography.

The analysis consists of three parts: The determination of whether there is asbestos present, what type is present and the determination of how much is present. The general flow of the analysis is:

(i) Gross examination.

(ii) Examination under polarized light on the stereo microscope.

(iii) Examination by phase-polar illumination on the compound phase microscope.

(iv) Determination of species by dispersion stain. Examination by Becke line analysis may also be used; however, this is usually more cumbersome for asbestos determination.

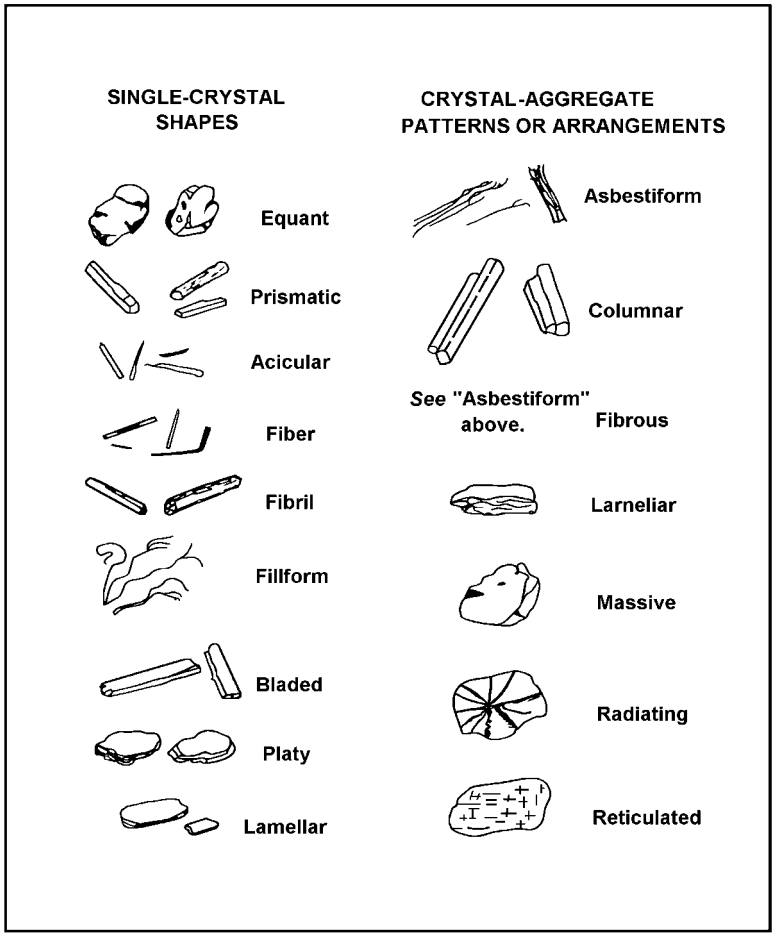

Figure 1. Particle definitions showing mineral growth habits. From the U.S. Bureau of Mines

(v) Difficult samples may need to be analyzed by SEM or TEM, or the results from those techniques combined with light microscopy for a definitive identification. Identification of a particle as asbestos requires that it be asbestiform. Description of particles should follow the suggestion of Campbell. (Figure 2)

For the purpose of regulation, the mineral must be one of the six minerals covered and must be in the asbestos growth habit. Large specimen samples of asbestos generally have the gross appearance of wood. Fibers are easily parted from it. Asbestos fibers are very long compared with their widths. The fibers have a very high tensile strength as demonstrated by bending without breaking. Asbestos fibers exist in bundles that are easily parted, show longitudinal fine structure and may be tufted at the ends showing “bundle of sticks morphology.

In the microscope some of these properties may not be observable. Amphiboles do not always show striations along their length even when they are asbestos. Neither will they always show tufting. They generally do not show a curved nature except for very long fibers. Asbestos and asbestiform minerals are usually characterized in groups by extremely high aspect ratios (greater than 100:1). While aspect ratio analysis is useful for characterizing populations of fibers, it cannot be used to identify individual fibers of intermediate to short aspect ratio. Observation of many fibers is often necessary to determine whether a sample consists of "cleavage fragments" or of asbestos fibers.

Most cleavage fragments of the asbestos minerals are easily distinguishable from true asbestos fibers. This is because true cleavage fragments usually have larger diameters than 1 micron. Internal structure of particles larger than this usually shows them to have no internal fibrillar structure. In addition, cleavage fragments of the monoclinic amphiboles show inclined extinction under crossed polars with no compensator. Asbestos fibers usually show extinction at zero degrees or ambiguous extinction if any at all. Morphologically, the larger cleavage fragments are obvious by their blunt or stepped ends showing prismatic habit. Also, they tend to be acicular rather than filiform.

Where the particles are less than 1 micron in diameter and have an aspect ratio greater than or equal to 3:1, it is recommended that the sample be analyzed by SEM or TEM if there is any question whether the fibers are cleavage fragments or asbestiform particles.

Care must be taken when analyzing by electron microscopy because the interferences are different from those in light microscopy and may structurally be very similar to asbestos. The classic interference is between anthophyllite and biopyribole or intermediate fiber. Use the same morphological clues for electron microscopy as are used for light microscopy, e.g. fibril splitting, internal longitudinal striation, fraying, curvature, etc.

(vi) Gross examination:

Examine the sample, preferably in the glass vial. Determine the presence of any obvious fibrous component. Estimate a percentage based on previous experience and current observation. Determine whether any pre-preparation is necessary. Determine the number of phases present. This step may be carried out or augmented by observation at 6x to 40x under a stereo microscope.

(vii) After performing any necessary pre-preparation, prepare slides of each phase as described above. Two preparations of the same phase in the same index medium can be made side-by-side on the same glass for convenience. Examine with the polarizing stereo microscope. Estimate the percentage of asbestos based on the amount of birefringent fiber present.

(viii) Examine the slides on the phase-polar microscopes at magnifications of 160x and 400x. Note the morphology of the fibers. Long, thin, very straight fibers with little curvature are indicative of fibers from the amphibole family. Curved, wavy fibers are usually indicative of chrysotile. Estimate the percentage of asbestos on the phase-polar microscope under conditions of crossed polars and a gypsum plate. Fibers smaller than 1.0 microns in thickness must be identified by inference to the presence of larger, identifiable fibers and morphology. If no larger fibers are visible, electron microscopy should be performed. At this point, only a tentative identification can be made. Full identification must be made with dispersion microscopy. Details of the tests are included in the appendices.

(ix) Once fibers have been determined to be present, they must be identified. Adjust the microscope for dispersion mode and observe the fibers. The microscope has a rotating stage, one polarizing element, and a system for generating dark-field dispersion microscopy (see subsection (4)(f) of this appendix). Align a fiber with its length parallel to the polarizer and note the color of the Becke lines. Rotate the stage to bring the fiber length perpendicular to the polarizer and note the color. Repeat this process for every fiber or fiber bundle examined. The colors must be consistent with the colors generated by standard asbestos reference materials for a positive identification. In n = 1.550, amphiboles will generally show a yellow to straw-yellow color indicating that the fiber indices of refraction are higher than the liquid. If long, thin fibers are noted and the colors are yellow, prepare further slides as above in the suggested matching liquids listed below:

Type of asbestos	*Index of refraction*
Chrysotile	n = 1.550.
Amosite	n = 1.670 or 1.680.
Crocidolite	n = 1.690.
Anthophyllite	n = 1.605 and 1.620.
Tremolite	n = 1.605 and 1.620.
Actinolite	n = 1.620.

Where more than one liquid is suggested, the first is preferred; however, in some cases this liquid will not give good dispersion color. Take care to avoid interferences in the other liquid; e.g., wollastonite in n = 1.620 will give the same colors as tremolite. In n = 1.605 wollastonite will appear yellow in all directions. Wollastonite may be determined under crossed polars as it will change from blue to yellow as it is rotated along its fiber axis by tapping on the cover slip. Asbestos minerals will not change in this way.

Determination of the angle of extinction may, when present, aid in the determination of anthophyllite from tremolite. True asbestos fibers usually have 0 degree extinction or ambiguous extinction, while cleavage fragments have more definite extinction.

Continue analysis until both preparations have been examined and all present species of asbestos are identified. If there are no fibers present, or there is less than 0.1% present, end the analysis with the minimum number of slides (2).

(x) Some fibers have a coating on them which makes dispersion microscopy very difficult or impossible. Becke line analysis or electron microscopy may be performed in those cases. Determine the percentage by light microscopy. TEM analysis tends to overestimate the actual percentage present.

(xi) Percentage determination is an estimate of occluded area, tempered by gross observation. Gross observation information is used to make sure that the high magnification microscopy does not greatly over- or under-estimate the amount of fiber present. This part of the analysis requires a great deal of experience. Satisfactory models for asbestos content analysis have not yet been developed, although some models based on metallurgical grain-size determination have found some utility. Estimation is more easily handled in situations where the grain sizes visible at about 160x are about the same and the sample is relatively homogeneous.

View all of the area under the cover slip to make the percentage determination. View the fields while moving the stage, paying attention to the clumps of material. These are not usually the best areas to perform dispersion microscopy because of the interference from other materials. But, they are the areas most likely to represent the accurate percentage in the sample. Small amounts of asbestos require slower scanning and more frequent analysis of individual fields.

Report the area occluded by asbestos as the concentration. This estimate does not generally take into consideration the difference in density of the different species present in the sample. For most samples this is adequate. Simulation studies with similar materials must be carried out to apply microvisual estimation for that purpose and is beyond the scope of this procedure.

(xii) Where successive concentrations have been made by chemical or physical means, the amount reported is the percentage of the material in the "as submitted" or original state. The percentage determined by microscopy is multiplied by the fractions remaining after pre-preparation steps to give the percentage in the original sample. For example:

Step 1. 60% remains after heating at 550 degrees C for 1 h.
Step 2. 30% of the residue of step 1 remains after dissolution of carbonate in 0.1 m
HCl.
Step 3. Microvisual estimation determines that 5% of the sample is chrysotile asbestos.
The reported result is:
R = (Microvisual result in percent)x(Fraction remaining after step 2)x(Fraction remaining of original sample after step 1)
R = (5)x(.30)x(.60) = 0.9%

(xiii) Report the percent and type of asbestos present. For samples where asbestos was identified, but is less than 1.0%, report "Asbestos present, less than 1.0%." There must have been at least two observed fibers or fiber bundles in the two preparations to be reported as present. For samples where asbestos was not seen, report as "None Detected."

(4) Auxiliary Information

Because of the subjective nature of asbestos analysis, certain concepts and procedures need to be discussed in more depth. This information will help the analyst understand why some of the procedures are carried out the way they are.

(a) Light

Light is electromagnetic energy. It travels from its source in packets called quanta. It is instructive to consider light as a plane wave. The light has a direction of travel. Perpendicular to this and mutually perpendicular to each other, are two vector components. One is the magnetic vector and the other is the electric vector. We shall only be concerned with the electric vector. In this description, the interaction of the vector and the mineral will describe all the observable phenomena. From a light source such a microscope illuminator, light travels in all different direction from the filament.

In any given direction away from the filament, the electric vector is perpendicular to the direction of travel of a light ray. While perpendicular, its orientation is random about the travel axis. If the electric vectors from all the light rays were lined up by passing the light through a filter that would only let light rays with electric vectors oriented in one direction pass, the light would then be polarized.

Polarized light interacts with matter in the direction of the electric vector. This is the polarization direction. Using this property it is possible to use polarized light to probe different materials and identify them by how they interact with light. The speed of light in a vacuum is a constant at about 2.99þ108 m/s. When light travels in different materials such as air, water, minerals or oil, it does not travel at this speed. It travels slower. This slowing is a function of both the material through which the light is traveling and the wavelength or frequency of the light. In general, the more dense the material, the slower the light travels. Also, generally, the higher the frequency, the slower the light will travel. The ratio of the speed of light in a vacuum to that in a material is called the index of refraction (n). It is usually measured at 589 nm (the sodium D line). If white light (light containing all the visible wavelengths) travels through a material, rays of longer wavelengths will travel faster than those of shorter wavelengths, this separation is called dispersion. Dispersion is used as an identifier of materials as described in Section (4)(f).

(b) Material Properties

Materials are either amorphous or crystalline. The difference between these two descriptions depends on the positions of the atoms in them. The atoms in amorphous materials are randomly arranged with no long range order. An example of an amorphous material is glass. The atoms in crystalline materials, on the other hand, are in regular arrays and have long range order. Most of the atoms can be found in highly predictable locations. Examples of crystalline material are salt, gold, and the asbestos minerals.

It is beyond the scope of this method to describe the different types of crystalline materials that can be found, or the full description of the classes into which they can fall. However, some general crystallography is provided below to give a foundation to the procedures described.

With the exception of anthophyllite, all the asbestos minerals belong to the monoclinic crystal type. The unit cell is the basic repeating unit of the crystal and for monoclinic crystals can be described as having three unequal sides, two 90 degrees angles and one angle not equal to 90 degrees. The orthorhombic group, of which anthophyllite is a member has three unequal sides and three 90 degrees angles. The unequal sides are a consequence of the complexity of fitting the different atoms into the unit cell. Although the atoms are in a regular array, that array is not symmetrical in all directions. There is long range order in the three major directions of the crystal. However, the order is different in each of the three directions. This has the effect that the index of refraction is different in each of the three directions. Using polarized light, we can investigate the index of refraction in each of the directions and identify the mineral or material under investigation. The indices alpha, beta, and gamma are used to identify the lowest, middle, and highest index of refraction respectively. The x direction, associated with alpha is called the fast axis. Conversely, the z direction is associated with gamma and is the slow direction. Crocidolite has alpha along the fiber length making it "length-fast." The remainder of the asbestos minerals have the gamma axis along the fiber length. They are called "length-slow." This orientation to fiber length is used to aid in the identification of asbestos.

(c) Polarized Light Technique

Polarized light microscopy as described in this section uses the phase-polar microscope described in Section (3)(b). A phase contrast microscope is fitted with two polarizing elements, one below and one above the sample. The polarizers have their polarization directions at right angles to each other. Depending on the tests performed, there may be a compensator between these two polarizing elements. Light emerging from a polarizing element has its electric vector pointing in the polarization direction of the element. The light will not be subsequently transmitted through a second element set at a right angle to the first element. Unless the light is altered as it passes from one element to the other, there is no transmission of light.

(d) Angle of Extinction

Crystals which have different crystal regularity in two or three main directions are said to be anisotropic. They have a different index of refraction in each of the main directions. When such a crystal is inserted between the crossed polars, the field of view is no longer dark but shows the crystal in color. The color depends on the properties of the crystal. The light acts as if it travels through the crystal along the optical axes. If a crystal optical axis were lined up along one of the polarizing directions (either the polarizer or the analyzer) the light would appear to travel only in that direction, and it would blink out or go dark. The difference in degrees between the fiber direction and the angle at which it blinks out is called the angle of extinction. When this angle can be measured, it is useful in identifying the mineral. The procedure for measuring the angle of extinction is to first identify the polarization direction in the microscope. A commercial alignment slide can be used to establish the polarization directions or use anthophyllite or another suitable mineral. This mineral has a zero degree angle of extinction and will go dark to

extinction as it aligns with the polarization directions. When a fiber of anthophyllite has gone to extinction, align the eyepiece reticle or graticule with the fiber so that there is a visual cue as to the direction of polarization in the field of view. Tape or otherwise secure the eyepiece in this position so it will not shift.

After the polarization direction has been identified in the field of view, move the particle of interest to the center of the field of view and align it with the polarization direction. For fibers, align the fiber along this direction. Note the angular reading of the rotating stage. Looking at the particle, rotate the stage until the fiber goes dark or "blinks out." Again note the reading of the stage. The difference in the first reading and the second is an angle of extinction.

The angle measured may vary as the orientation of the fiber changes about its long axis. Tables of mineralogical data usually report the maximum angle of extinction. Asbestos forming minerals, when they exhibit an angle of extinction, usually do show an angle of extinction close to the reported maximum, or as appropriate depending on the substitution chemistry.

(e) Crossed Polars With Compensator

When the optical axes of a crystal are not lined up along one of the polarizing directions (either the polarizer or the analyzer) part of the light travels along one axis and part travels along the other visible axis. This is characteristic of birefringent materials.

The color depends on the difference of the two visible indices of refraction and the thickness of the crystal. The maximum difference available is the difference between the alpha and the gamma axises. This maximum difference is usually tabulated as the birefringence of the crystal.

For this test, align the fiber at 45 degrees to the polarization directions in order to maximize the contribution to each of the optical axes. The colors seen are called retardation colors. They arise from the recombination of light which has traveled through the two separate directions of the crystal. One of the rays is retarded behind the other since the light in that direction travels slower. On recombination, some of the colors which make up white light are enhanced by constructive interference and some are suppressed by destructive interference. The result is a color dependent on the difference between the indices and the thickness of the crystal. The proper colors, thicknesses, and retardations are shown on a Michel-Levy chart. The three items, retardation, thickness and birefringence are related by the following relationship: Lambda

$$R = t(n\gamma - \alpha)$$

R = retardation,

t = crystal thickness in micron, and

alpha, gamma = indices of refraction.

Examination of the equation for asbestos minerals reveals that the visible colors for almost all common asbestos minerals and fiber sizes are shades of gray and black. The eye is relatively poor at discriminating different shades of gray. It is very good at discriminating different colors. In order to compensate for the low retardation, a compensator is added to the light train between the polarization elements. The compensator used for this test is a gypsum plate of known thickness and birefringence. Such a compensator when oriented at 45 degrees to the polarizer direction, provides a retardation of 530 nm of the 530 nm wavelength color. This enhances the red color and gives the background a characteristic red to red-magenta color. If this "full-wave" compensator is in place when the asbestos preparation is inserted into the light train, the colors seen on the fibers are quite different. Gypsum, like asbestos has a fast axis and a slow axis. When a fiber is aligned with its fast axis in the same direction as the fast axis of the gypsum plate, the ray vibrating in the slow direction is retarded by both the asbestos and the gypsum. This results in a higher retardation than would be present for either of the two minerals. The color seen is a second order blue. When the fiber is rotated 90 degrees using the rotating stage, the slow direction of the fiber is now aligned with the fast direction of the gypsum and the fast direction of the fiber is aligned with the slow direction of the gypsum. Thus, one ray vibrates faster in the fast direction of the gypsum, and slower in the slow direction of the fiber; the other ray will vibrate slower in the slow direction of the gypsum and faster in the fast direction of the fiber. In this case, the effect is subtractive and the color seen is a first order yellow. As long as the fiber thickness does not add appreciably to the color, the same basic colors will be seen for all asbestos types except crocidolite. In crocidolite the colors will be weaker, may be in the opposite directions, and will be altered by the blue absorption color natural to crocidolite. Hundreds of other materials will give the same colors as asbestos, and therefore, this test is not definitive for asbestos. The test is useful in discriminating against fiberglass or other amorphous fibers such as some synthetic fibers. Certain synthetic fibers will show retardation colors different than asbestos; however, there are some forms of polyethylene and aramid which will show morphology and retardation colors similar to asbestos minerals. This test must be supplemented with a positive identification test when birefringent fibers are present which cannot be excluded by morphology. This test is relatively ineffective for use on fibers less than 1 micron in diameter. For positive confirmation TEM or SEM should be used if no larger bundles or fibers are visible.

(f) Dispersion Staining

Dispersion microscopy or dispersion staining is the method of choice for the identification of asbestos in bulk materials. Becke line analysis is used by some laboratories and yields the same results as does dispersion staining for asbestos and can be used in lieu of dispersion staining. Dispersion staining is performed on the same platform as the phase-polar analysis with the analyzer and compensator removed. One polarizing element remains to define the direction of the light so that the different indices of refraction of the fibers may be separately determined.

Dispersion microscopy is a dark-field technique when used for asbestos. Particles are imaged with scattered light. Light which is unscattered is blocked from reaching the eye either by the back field image mask in a McCrone objective or a back field image mask in the phase condenser. The most convenient method is to use the rotating phase condenser to move an oversized phase ring into place.

The ideal size for this ring is for the central disk to be just larger than the objective entry aperture as viewed in the back focal plane. The larger the disk, the less scattered light reaches the eye. This will have the effect of diminishing the intensity of dispersion color and will shift the actual color seen. The colors seen vary even on microscopes from the same manufacturer. This is due to the different bands of wavelength exclusion by different mask sizes. The mask may either reside in the condenser or in the objective back focal plane. It is imperative that the analyst determine by experimentation with asbestos standards what the appropriate colors should be for each asbestos type. The colors depend also on the temperature of the preparation and the exact chemistry of the asbestos. Therefore, some slight differences from the standards should be allowed. This is not a serious problem for commercial asbestos uses. This technique is used for identification of the indices of refraction for fibers by recognition of color. There is no direct numerical readout of the index of refraction. Correlation of color to actual index of refraction is possible by referral to published conversion tables. This is not necessary for the analysis of asbestos. Recognition of appropriate colors along with the proper morphology are deemed sufficient to identify the commercial asbestos minerals. Other techniques including SEM, TEM, and XRD may be required to provide additional information in order to identify other types of asbestos.

Make a preparation in the suspected matching high dispersion oil, e.g., n = 1.550 for chrysotile. Perform the preliminary tests to determine whether the fibers are birefringent or not. Take note of the morphological character. Wavy fibers are indicative of chrysotile while long, straight, thin, frayed fibers are indicative of amphibole asbestos. This can aid in the selection of the appropriate matching oil. The microscope is set up and the polarization direction is noted as in Section (4)(d). Align a fiber with the polarization direction. Note the color. This is the color parallel to the polarizer. Then rotate the fiber rotating the stage 90 degrees so that the polarization direction is across the fiber. This is the perpendicular position. Again note the color. Both colors must be consistent with standard asbestos minerals in the correct direction for a positive identification of asbestos. If only one of the colors is correct while the other is not, the identification is not positive. If the colors in both directions are bluish-white, the analyst has chosen a matching index oil which is higher than the correct matching oil, e.g. the analyst has used n = 1.620 where chrysotile is present. The next lower oil (Section (3)(e)) should be used to prepare another specimen. If the color in both directions is yellow-white to straw-yellow-white, this indicates that the index of the oil is lower than the index of the fiber, e.g. the preparation is in n = 1.550 while anthophyllite is present. Select the next higher oil (Section (3)(e)) and prepare another slide. Continue in this fashion until a positive identification of all asbestos species present has been made or all possible asbestos

species have been ruled out by negative results in this test. Certain plant fibers can have similar dispersion colors as asbestos. Take care to note and evaluate the morphology of the fibers or remove the plant fibers in pre-preparation. Coating material on the fibers such as carbonate or vinyl may destroy the dispersion color. Usually, there will be some outcropping of fiber which will show the colors sufficient for identification. When this is not the case, treat the sample as described in Section (3)(c) and then perform dispersion staining. Some samples will yield to Becke line analysis if they are coated or electron microscopy can be used for identification.

(5) **References**

Crane, D.T., Asbestos in Air, OSHA method ID160, Revised November 1992.

Ford, W.E., Dana's Textbook of Mineralogy; Fourth Ed.; John Wiley and Son, New York, 1950, p. vii.

Selikoff,.I.J., Lee, D.H.K., Asbestos and Disease, Academic Press, New York, 1978, pp. 3, 20.

Women Inspectors of Factories. Annual Report for 1898, H.M. Statistical Office, London, p. 170 (1898).

Selikoff,.I.J., Lee, D.H.K., Asbestos and Disease, Academic Press, New York, 1978, pp. 26, 30.

Campbell, W.J., et al, Selected Silicate Minerals and Their Asbestiform Varieties, United States Department of the Interior, Bureau of Mines, Information Circular 8751, 1977.

Asbestos, Code of Federal Regulations, 29 CFR 1910.1001 and 29 CFR 1926.58.

National Emission Standards for Hazardous Air Pollutants; Asbestos NESHAP Revision, Federal Register, Vol. 55, No. 224, 20 November 1990, p. 48410.

Ross, M. The Asbestos Minerals: Definitions, Description, Modes of Formation, Physical and Chemical Properties and Health Risk to the Mining Community, Nation Bureau of Standards Special Publication, Washington, D.C., 1977.

Lilis, R., Fibrous Zeolites and Endemic Mesothelioma in Cappadocia, Turkey, J. Occ Medicine, 1981, 23, (8), 548-550.

Occupational Exposure to Asbestos-1972, U.S. Department of Health Education and Welfare, Public Health Service, Center for Disease Control, National Institute for Occupational Safety and Health, HSM-72-10267.

Campbell, W.J., et al, Relationship of Mineral Habit to Size Characteristics for Tremolite Fragments and Fibers, United States Department of the Interior, Bureau of Mines, Information Circular 8367, 1979.

Mefford, D., DCM Laboratory, Denver, private communication, July 1987.

Deer, W.A., Howie, R.A., Zussman, J., Rock Forming Minerals, Longman, Thetford, UK, 1974.

Kerr, P.F., Optical Mineralogy; Third Ed. McGraw-Hill, New York, 1959.

Veblen, D.R. (Ed.), Amphiboles and Other Hydrous Pyriboles-Mineralogy, Reviews in Mineralogy, Vol. 9A, Michigan, 1982, pp 1-102.

Dixon, W.C., Applications of Optical Microscopy in the Analysis of Asbestos and Quartz, ACS Symposium Series, No. 120, Analytical Techniques in Occupational Health Chemistry, 1979.

Polarized Light Microscopy, McCrone Research Institute, Chicago, 1976.

Asbestos Identification, McCrone Research Institute, G & G printers, Chicago, 1987.

McCrone, W.C., Calculation of Refractive Indices from Dispersion Staining Data, The Microscope, No. 37, Chicago, 1989.

Levadie, B. (Ed.), Asbestos and Other Health Related Silicates, ASTM Technical Publication 834, ASTM, Philadelphia 1982.

Steel, E. and Wylie, A., Riordan, P.H. (Ed.), Mineralogical Characteristics of Asbestos, Geology of Asbestos Deposits, pp. 93-101, SME-AIME, 1981.

Zussman, J., The Mineralogy of Asbestos, Asbestos: Properties, Applications and Hazards, pp. 45-67 Wiley, 1979.

WAC 296-62-07755 Appendix K--Smoking cessation program information for asbestos, tremolite, anthophyllite, and actinolite--Nonmandatory.

The following organizations provide smoking cessation information and program material:

(1) The National Cancer Institute operates a toll-free Cancer Information Service (CIS) with trained personnel to help you. Call 1-800-4-CANCER* to reach the CIS office serving your area, or write: Office of Cancer Communications, National Cancer Institute, National Institutes of Health, Building 31, Room 10A24, Bethesda, Maryland 20892.

(2) American Cancer Society, 3340 Peachtree Road, N.E., Atlanta, Georgia 30062, (404) 320-3333. The American Cancer Society (ACS) is a voluntary organization composed of 58 divisions and 3,100 local units. Through "The Great American Smokeout" in November, the annual Cancer Crusade in April, and numerous educational materials, ACS helps people learn about the health hazards of smoking and become successful ex-smokers.

(3) American Heart Association, 7320 Greenville Avenue, Dallas, Texas 75231, (214) 750-5300. The American Heart Association (AHA) is a voluntary organization with 130,000 members (physicians, scientists, and laypersons) in 55 states and regional groups. AHA produces a variety of publications and audiovisual materials about the effects of smoking on the heart. AHA also has developed a guidebook for incorporating a weight-control component into smoking cessation programs.

(4) American Lung Association, 1740 Broadway, New York, New York 10019, (212) 245-8000. A voluntary organization of 7,500 members (physicians, nurses, and laypersons), the American Lung Association (ALA) conducts numerous public information programs about the health effect of smoking. ALA has 59 state and 85 local units. The organization actively supports legislation and information campaigns for nonsmokers' rights and provides help for smokers who want to quit, for example, through "Freedom From Smoking," a self-help smoking cessation program.

(5) Office on Smoking and Health, United States Department of Health and Human Services, 5600 Fishers Lane, Park Building, Room 110, Rockville, Maryland 20857. The Office on Smoking and Health (OSH) is the Department of Health and Human Services' lead agency in smoking control. OSH has sponsored distribution of publications on smoking-related topics, such as free flyers on relapse after initial quitting, helping a friend or family member quit smoking, the health hazards of smoking, and the effects of parental smoking on teenagers.

*In Hawaii, on Oahu call 524-1234 (call collect from neighboring islands), Spanish-speaking staff members are available during daytime hours to callers from the following areas: California, Florida, Georgia, Illinois, New Jersey (area code 210), New York, and Texas. Consult your local telephone directory for listings of local chapters.

PART I-2
HEXAVALENT CHROMIUM

WAC	Page
WAC 296-62-080 Hexavalent chromium	***1***
WAC 296-62-08003 Hexavalent chromium. Scope.	**1**
WAC 296-62-08005 Definitions.	**1**
WAC 296-62-08007 Permissible exposure limit (PEL)	**2**
WAC 296-62-08009 Exposure determination.	**2**
WAC 296-62-08011 Regulated areas.	**4**
WAC 296-62-08013 Methods of compliance.	**4**
WAC 296-62-08015 Respiratory protection.	**5**
WAC 296-62-08017 Protective work clothing and equipment.	**5**
WAC 296-62-08019 Hygiene areas and practices.	**6**
WAC 296-62-08021 Housekeeping.	**7**
WAC 296-62-08023 Medical surveillance.	**8**
WAC 296-62-08025 Communication of chromium (VI) hazards.	**10**
WAC 296-62-08027 Recordkeeping.	**10**
WAC 296-62-08029 Dates.	**12**

WAC 296-62-080 Hexavalent chromium.

WAC 296-62-08003 Hexavalent chromium. Scope.

This standard applies to occupational exposures to chromium (VI) in all forms and compounds in general industry; construction; shipyards, marine terminals, and long shoring, except:

(1) Agricultural operations covered by chapter 296-307 WAC, Safety standards for agriculture;

(2) Exposures that occur in the application of pesticides regulated by the Washington state department of agriculture or another federal government agency (e.g., the treatment of wood with preservatives);

(3) Exposures to portland cement; or

(4) Where the employer has objective data demonstrating that a material containing chromium or a specific process, operation, or activity involving chromium cannot release dusts, fumes, or mists of chromium (VI) in concentrations at or above 0.5 (mu)g/m\3\ as an 8-hour time-weighted average (TWA) under any expected conditions of use.

WAC 296-62-08005 Definitions.

For the purposes of this section the following definitions apply:

Action level. A concentration of airborne chromium (VI) of 2.5 micrograms per cubic meter of air (2.5 (mu)g/m\3\) calculated as an 8-hour time-weighted average (TWA).

Chromium (VI) (hexavalent chromium or Cr(VI). Chromium with a valence of positive six, in any form and in any compound.

Emergency. Any occurrence that results, or is likely to result, in an uncontrolled release of chromium (VI). If an incidental release of chromium (VI) can be controlled at the time of release by employees in the immediate release area, or by maintenance personnel, it is not an emergency.

Employee exposure. The exposure to airborne chromium (VI) that would occur if the employee were not using a respirator.

High-efficiency particulate air (HEPA) filter. A filter that is at least 99.97 percent efficient in removing mono-dispersed particles of 0.3 micrometers in diameter or larger.

Historical monitoring data. Data from chromium (VI) monitoring conducted prior to July 31, 2006, obtained during work operations conducted under workplace conditions closely resembling the processes, types of material, control methods, work practices, and environmental conditions in the employer's current operations.

Objective data. Information such as air monitoring data from industry-wide surveys or calculations based on the composition or chemical and physical properties of a substance demonstrating the employee exposure to chromium (VI) associated with a particular product or material or a specific process, operation, or activity. The data must reflect workplace conditions closely resembling the processes, types of material, control methods, work practices, and environmental conditions in the employer's current operations.

Physician or other licensed health care professional (PLHCP). An individual whose legally permitted scope of practice (i.e., license, registration, or certification) allows him or her to independently provide or be delegated the responsibility to provide some or all of the particular health care services required by WAC 296-62-08023.

Regulated area. An area, demarcated by the employer, where an employee's exposure to airborne concentrations of chromium (VI) exceeds, or can reasonably be expected to exceed, the PEL.

WAC 296-62-08007 Permissible exposure limit (PEL).

Permissible exposure limit (PEL). The employer must ensure that no employee is exposed to an airborne concentration of chromium (VI) in excess of 5 micrograms per cubic meter of air (5 (mu)g/m\3\), calculated as an 8-hour time-weighted average (TWA).

WAC 296-62-08009 Exposure determination.

(1) General. Each employer who has a workplace or work operation covered by this section must determine the 8-hour TWA exposure for each employee exposed to chromium (VI). This determination must be made in accordance with either subsection (2) or (3) of this section.

(2) Scheduled monitoring option.

(a) The employer must perform initial monitoring to determine the 8-hour TWA exposure for each employee on the basis of a sufficient number of personal breathing zone air samples to accurately characterize full shift exposure on each shift, for each job classification, in each work area. Where an employer does representative sampling instead of sampling all employees in order to meet this requirement, the employer must sample the employee(s) expected to have the highest chromium (VI) exposures.

(b) If initial monitoring indicates that employee exposures are below the action level, the employer may discontinue monitoring for those employees whose exposures are represented by such monitoring.

(c) If monitoring reveals employee exposures to be at or above the action level, the employer must perform periodic monitoring at least every six months.

(d) If monitoring reveals employee exposures to be above the PEL, the employer must perform periodic monitoring at least every three months.

(e) If periodic monitoring indicates that employee exposures are below the action level, and the result is confirmed by the result of another monitoring taken at least seven days later, the employer may discontinue the monitoring for those employees whose exposures are represented by such monitoring.

(f) The employer must perform additional monitoring when there has been any change in the production process, raw materials, equipment, personnel, work practices, or control methods that may result in new or additional exposures to chromium (VI), or when the employer has any reason to believe that new or additional exposures have occurred.

(3) Performance-oriented option. The employer must determine the 8-hour TWA exposure for each employee on the basis of any combination of air monitoring data, historical monitoring data, or objective data sufficient to accurately characterize employee exposure to chromium (VI).

(4) Employee notification of determination results.

(a) In general industry within five work days after making an exposure determination in accordance with subsection (2) or (3) of this section, the employer must individually notify each affected employee in writing of the results of that determination or post the results in an appropriate location accessible to all affected employees.

(b) In construction and shipyards, marine terminals, and longshoring within five work days after making an exposure determination in accordance with subsection (2) or (3) of this section, the employer must individually notify each affected employee in writing of the results of that determination or post the results in an appropriate location accessible to all affected employees.

(c) Whenever the exposure determination indicates that employee exposure is above the PEL, the employer must describe in the written notification the corrective action being taken to reduce employee exposure to or below the PEL.

(5) Accuracy of measurement. Where air monitoring is performed to comply with the requirements of this section, the employer must use a method of monitoring and analysis that can measure chromium (VI) to within an accuracy of plus or minus twenty-five percent and can produce accurate measurements to within a statistical confidence level of ninety-five percent for airborne concentrations at or above the action level.

(6) Observation of monitoring.

(a) Where air monitoring is performed to comply with the requirements of this section, the employer must provide affected employees or their designated representatives an opportunity to observe any monitoring of employee exposure to chromium (VI).

(b) When observation of monitoring requires entry into an area where the use of protective clothing or equipment is required, the employer must provide the observer with clothing and equipment and must ensure that the observer uses such clothing and equipment and complies with all other applicable safety and health procedures.

WAC 296-62-08011 Regulated areas.

EXEMPTION:
This section does not apply to construction, shipyards, marine terminals or long shoring.

(1) Establishment. The employer must establish a regulated area wherever an employee's exposure to airborne concentrations of chromium (VI) is, or can reasonably be expected to be, in excess of the PEL.

(2) Demarcation. The employer must ensure that regulated areas are demarcated from the rest of the workplace in a manner that adequately establishes and alerts employees of the boundaries of the regulated area.

(3) Access. The employer must limit access to regulated areas to:

(a) Persons authorized by the employer and required by work duties to be present in the regulated area;

(b) Any person entering such an area as a designated representative of employees for the purpose of exercising the right to observe monitoring procedures under WAC 296-62-08009;

(c) Any person authorized by the Washington Industrial Safety and Health Act (WISHA) or regulations issued under it to be in a regulated area.

WAC 296-62-08013 Methods of compliance.

(1) Engineering and work practice controls.

(a) Except as permitted in (c) of this subsection, the employer must use engineering and work practice controls to reduce and maintain employee exposure to chromium (VI) to or below the PEL unless the employer can demonstrate that such controls are not feasible. Wherever feasible engineering and work practice controls are not sufficient to reduce employee exposure to or below the PEL, the employer must use them to reduce employee exposure to the lowest levels achievable, and must supplement them by the use of respiratory protection that complies with the requirements of WAC 296-62-08015.

EXEMPTION:
This (b) does not apply to construction, shipyards, marine terminals and long shoring.

(b) Where painting of aircraft or large aircraft parts is performed in the aerospace industry, the employer must use engineering and work practice controls to reduce and maintain employee exposure to chromium (VI) to or below 25 (mu)g/m\3\ unless the employer can demonstrate that such controls are not feasible. The employer must supplement such engineering and work practice controls with the use of respiratory protection that complies with the requirements of WAC 296-62-08015 to achieve the PEL.

(c) Where the employer can demonstrate that a process or task does not result in any employee exposure to chromium (VI) above the PEL for thirty or more days per year (twelve consecutive months), the requirement to implement engineering and work practice controls to achieve the PEL does not apply to that process or task.

(2) Prohibition of rotation. The employer must not rotate employees to different jobs to achieve compliance with the PEL.

WAC 296-62-08015 Respiratory protection.

(1) General. Where respiratory protection is required by this section, the employer must provide each employee an appropriate respirator that complies with the requirements of this chapter. Respiratory protection is required during:

(a) Periods necessary to install or implement feasible engineering and work practice controls;

(b) Work operations, such as maintenance and repair activities, for which engineering and work practice controls are not feasible;

(c) Work operations for which an employer has implemented all feasible engineering and work practice controls and such controls are not sufficient to reduce exposures to or below the PEL;

(d) Work operations where employees are exposed above the PEL for fewer than thirty days per year, and the employer has elected not to implement engineering and work practice controls to achieve the PEL; or

(e) Emergencies.

(2) Respiratory protection program. Where respirator use is required by this section, the employer must institute a respiratory protection program in accordance with chapter 296-842 WAC, Respirators, which covers each employee required to use a respirator.

WAC 296-62-08017 Protective work clothing and equipment.

(1) Provision and use. Where a hazard is present or is likely to be present from skin or eye contact with chromium (VI), the employer must provide appropriate personal protective clothing and equipment at no cost to employees, and must ensure that employees use such clothing and equipment.

(2) Removal and storage.

(a) The employer must ensure that employees remove all protective clothing and equipment contaminated with chromium (VI) at the end of the work shift or at the completion of their tasks involving chromium (VI) exposure, whichever comes first.

(b) The employer must ensure that no employee removes chromium (VI) contaminated protective clothing or equipment from the workplace, except for those employees whose job it is to launder, clean, maintain, or dispose of such clothing or equipment.

(c) When contaminated protective clothing or equipment is removed for laundering, cleaning, maintenance, or disposal, the employer must ensure that it is stored and transported in sealed, impermeable bags or other closed, impermeable containers.

(d) The employer must ensure that bags or containers of contaminated protective clothing or equipment that are removed from change rooms for laundering, cleaning, maintenance, or disposal must be labeled in accordance with the requirements of the hazard communication standard, WAC 296-901-140.

(3) Cleaning and replacement.

(a) The employer must clean, launder, repair and replace all protective clothing and equipment required by this section as needed to maintain its effectiveness.

(b) The employer must prohibit the removal of chromium (VI) from protective clothing and equipment by blowing, shaking, or any other means that disperses chromium (VI) into the air or onto an employee's body.

(c) The employer must inform any person who launders or cleans protective clothing or equipment contaminated with chromium (VI) of the potentially harmful effects of exposure to chromium (VI) and that the clothing and equipment should be laundered or cleaned in a manner that minimizes skin or eye contact with chromium (VI) and effectively prevents the release of airborne chromium (VI) in excess of the PEL.

WAC 296-62-08019 Hygiene areas and practices.

(1) General.

(a) General industry, shipyards, marine terminals and long shoring. Where protective clothing and equipment is required, the employer must provide change rooms in conformance with WAC 296-800-230, Sanitation and hygiene facilities and procedures. Where skin contact with chromium (VI) occurs, the employer must provide washing facilities in conformance with WAC 296-800-230, Sanitation and hygiene facilities and procedures. Eating and drinking areas provided by the employer must also be in conformance with WAC 296-800-230, Sanitation and hygiene facilities and procedures.

(b) Construction. Where protective clothing and equipment is required, the employer must provide change rooms in conformance with WAC 296-155-17321, Hygiene facilities and practices. Where skin contact with chromium (VI) occurs, the employer must provide washing facilities in conformance with WAC 296-155-17321, Hygiene facilities and practices. Eating and drinking areas provided by the employer must also be in conformance with WAC 296-155-17321, Hygiene facilities and practices.

(2) Change rooms. The employer must ensure that change rooms are equipped with separate storage facilities for protective clothing and equipment and for street clothes, and that these facilities prevent cross-contamination.

(3) Washing facilities.

(a) The employer must provide readily accessible washing facilities capable of removing chromium (VI) from the skin, and must ensure that affected employees use these facilities when necessary.

(b) The employer must ensure that employees who have skin contact with chromium (VI) wash their hands and faces at the end of the work shift and prior to eating, drinking, smoking, chewing tobacco or gum, applying cosmetics, or using the toilet.

(4) Eating and drinking areas.

(a) Whenever the employer allows employees to consume food or beverages at a worksite where chromium (VI) is present, the employer must ensure that eating and drinking areas and surfaces are maintained as free as practicable of chromium (VI).

(b) The employer must ensure that employees do not enter eating and drinking areas with protective work clothing or equipment unless surface chromium (VI) has been removed from the clothing and equipment by methods that do not disperse chromium (VI) into the air or onto an employee's body.

(5) Prohibited activities. The employer must ensure that employees do not eat, drink, smoke, chew tobacco or gum, or apply cosmetics in areas where skin or eye contact with chromium (VI) occurs; or carry the products associated with these activities, or store such products in these areas.

WAC 296-62-08021 Housekeeping.

EXEMPTION:
This section does not apply to construction, shipyards, marine terminals and long shoring.

(1) General. The employer must ensure that:

(a) All surfaces are maintained as free as practicable of accumulations of chromium (VI).

(b) All spills and releases of chromium (VI) containing material are cleaned up promptly.

(2) Cleaning methods.

(a) The employer must ensure that surfaces contaminated with chromium (VI) are cleaned by HEPA-filter vacuuming or other methods that minimize the likelihood of exposure to chromium (VI).

(b) Dry shoveling, dry sweeping, and dry brushing may be used only where HEPA-filtered vacuuming or other methods that minimize the likelihood of exposure to chromium (VI) have been tried and found not to be effective.

(c) The employer must not allow compressed air to be used to remove chromium (VI) from any surface unless:

(i) The compressed air is used in conjunction with a ventilation system designed to capture the dust cloud created by the compressed air; or

(ii) No alternative method is feasible.

(d) The employer must ensure that cleaning equipment is handled in a manner that minimizes the reentry of chromium (VI) into the workplace.

(3) Disposal. The employer must ensure that:

(a) Waste, scrap, debris, and any other materials contaminated with chromium (VI) and consigned for disposal are collected and disposed of in sealed, impermeable bags or other closed, impermeable containers.

(b) Bags or containers of waste, scrap, debris, and any other materials contaminated with chromium (VI) that are consigned for disposal are labeled in accordance with the requirements of WAC 296-901-140 Hazard communication.

WAC 296-62-08023 Medical surveillance.

(1) General.

(a) The employer must make medical surveillance available at no cost to the employee, and at a reasonable time and place, for all employees:

(i) Who are or may be occupationally exposed to chromium (VI) at or above the action level for thirty or more days a year;

(ii) Experiencing signs or symptoms of the adverse health effects associated with chromium (VI) exposure; or

(iii) Exposed in an emergency.

(b) The employer must ensure that all medical examinations and procedures required by this section are performed by or under the supervision of a PLHCP.

(2) Frequency. The employer must provide a medical examination:

(a) Within thirty days after initial assignment, unless the employee has received a chromium (VI) related medical examination that meets the requirements of this paragraph within the last twelve months;

(b) Annually;

(c) Within thirty days after a PLHCP's written medical opinion recommends an additional examination;

(d) Whenever an employee shows signs or symptoms of the adverse health effects associated with chromium (VI) exposure;

(e) Within thirty days after exposure during an emergency which results in an uncontrolled release of chromium (VI); or

(f) At the termination of employment, unless the last examination that satisfied the requirements of WAC 296-62-08023, Medical surveillance was less than six months prior to the date of termination.

(3) Contents of examination. A medical examination consists of:

(a) A medical and work history, with emphasis on: Past, present, and anticipated future exposure to chromium (VI); any history of respiratory system dysfunction; any history of asthma, dermatitis, skin ulceration, or nasal septum perforation; and smoking status and history;

(b) A physical examination of the skin and respiratory tract; and

(c) Any additional tests deemed appropriate by the examining PLHCP.

(4) Information provided to the PLHCP. The employer must ensure that the examining PLHCP has a copy of this standard, and must provide the following information:

(a) A description of the affected employee's former, current, and anticipated duties as they relate to the employee's occupational exposure to chromium (VI);

(b) The employee's former, current, and anticipated levels of occupational exposure to chromium (VI);

(c) A description of any personal protective equipment used or to be used by the employee, including when and for how long the employee has used that equipment; and

(d) Information from records of employment-related medical examinations previously provided to the affected employee, currently within the control of the employer.

(5) PLHCP's written medical opinion.

(a) The employer must obtain a written medical opinion from the PLHCP, within thirty days for each medical examination performed on each employee, which contains:

(i) The PLHCP's opinion as to whether the employee has any detected medical condition(s) that would place the employee at increased risk of material impairment to health from further exposure to chromium (VI);

(ii) Any recommended limitations upon the employee's exposure to chromium (VI) or upon the use of personal protective equipment such as respirators;

(iii) A statement that the PLHCP has explained to the employee the results of the medical examination, including any medical conditions related to chromium (VI) exposure that require further evaluation or treatment, and any special provisions for use of protective clothing or equipment.

(b) The PLHCP must not reveal to the employer specific findings or diagnoses unrelated to occupational exposure to chromium (VI).

(c) The employer must provide a copy of the PLHCP's written medical opinion to the examined employee within two weeks after receiving it.

WAC 296-62-08025 Communication of chromium (VI) hazards.

(1) Hazard communication-General.

(a) Chemical manufacturers, importers, distributors, and employers must comply with all requirements of the hazard communication standard (HCS), WAC 296-901-140 for chromium (VI).

(b) In classifying the hazards of chromium (VI) at least the following hazards are to be addressed: Cancer, eye irritation, and skin sensitization.

(c) Employers must include chromium (VI) in the hazard communication program established to comply with the HCS, WAC 296-901-140. Employers must ensure that each employee has access to labels on containers of chromium (VI) and to safety date sheets, and is trained in accordance with the requirements of the HCS and subsection (2) of this section. The employer must ensure that at least the following hazards are addressed: Cancer, skin sensitization, and eye irritation.

(2) Employee information and training.

(a) The employer must ensure that each employee can demonstrate knowledge of at least the following:

(i) The contents of this section; and

(ii) The purpose and a description of the medical surveillance program required by (a)(i) of this subsection.

(b) The employer must make a copy of this section readily available without cost to all affected employees.

WAC 296-62-08027 Recordkeeping.

(1) Air monitoring data.

(a) The employer must maintain an accurate record of all air monitoring conducted to comply with the requirements of this section.

(b) This record must include at least the following information:

(i) The date of measurement for each sample taken;

(ii) The operation involving exposure to chromium (VI) that is being monitored;

(iii) Sampling and analytical methods used and evidence of their accuracy;

(iv) Number, duration, and the results of samples taken;

(v) Type of personal protective equipment, such as respirators worn; and

(vi) Name, Social Security number, and job classification of all employees represented by the monitoring, indicating which employees were actually monitored.

(c) The employer must ensure that exposure records are maintained and made available in accordance with chapter 296-802 WAC, Employee medical and exposure records.

(2) Historical monitoring data.

(a) Where the employer has relied on historical monitoring data to determine exposure to chromium (VI), the employer must establish and maintain an accurate record of the historical monitoring data relied upon.

(b) The record must include information that reflects the following conditions:

(i) The data were collected using methods that meet the accuracy requirements of WAC 296-62-08009(5);

(ii) The processes and work practices that were in use when the historical monitoring data were obtained are essentially the same as those to be used during the job for which exposure is being determined;

(iii) The characteristics of the chromium (VI) containing material being handled when the historical monitoring data were obtained are the same as those on the job for which exposure is being determined;

(iv) Environmental conditions prevailing when the historical monitoring data were obtained are the same as those on the job for which exposure is being determined; and

(v) Other data relevant to the operations, materials, processing, or employee exposures covered by the exception.

(c) The employer must ensure that historical exposure records are maintained and made available in accordance with chapter 296-802 WAC, Employee medical and exposure records.

(3) Objective data.

(a) The employer must maintain an accurate record of all objective data relied upon to comply with the requirements of this section.

(b) This record must include at least the following information:

(i) The chromium (VI) containing material in question;

(ii) The source of the objective data;

(iii) The testing protocol and results of testing, or analysis of the material for the release of chromium (VI);

(iv) A description of the process, operation, or activity and how the data support the determination; and

(v) Other data relevant to the process, operation, activity, material, or employee exposures.

(c) The employer must ensure that objective data are maintained and made available in accordance with chapter 296-802 WAC, Employee medical and exposure records.

(4) Medical surveillance.

(a) The employer must establish and maintain an accurate record for each employee covered by medical surveillance under WAC 296-62-08023, Medical surveillance.

(b) The record must include the following information about the employee:

(i) Name and Social Security number;

(ii) A copy of the PLHCP's written opinions;

(iii) A copy of the information provided to the PLHCP as required by WAC 296-62-08023(4).

(c) The employer must ensure that medical records are maintained and made available in accordance with chapter 296-802 WAC, Employee medical and exposure records.

WAC 296-62-08029 Dates.

(1) For employers with twenty or more employees, all obligations of this section, except engineering controls required by WAC 296-62-08013, commence November 27, 2006.

(2) For employers with nineteen or fewer employees, all obligations of this section, except engineering controls required by WAC 296-62-08013, commence May 30, 2007.

(3) For all employers, engineering controls required by WAC 296-62-08013 must be implemented no later than May 31, 2010.

Part J-1
PHYSICAL AGENTS

WAC		Page
WAC 296-62-090	***Physical agents.***	***1***
WAC 296-62-09001	**Definitions.**	**1**
WAC 296-62-09004	**Ionizing radiation.**	**2**
WAC 296-62-09005	**Nonionizing radiation.**	**16**
WAC 296-62-09007	**Pressure.**	**24**
WAC 296-62-09009	**Vibration**	**24**
WAC 296-62-09013	**Temperature, radiant heat, or temperature humidity combinations.**	**24**
WAC 296-62-095	***Outdoor heat exposure***	***25***
WAC 296-62-09510	**Scope and application.**	**25**
WAC 296-62-09520	**Definitions.**	**26**
WAC 296-62-09530	**Employer and employee responsibility.**	**26**
WAC 296-62-09540	**Drinking water.**	**27**
WAC 296-62-09550	**Responding to signs and symptoms of heat-related Illness.**	**27**
WAC 296-62-09560	**Information and training.**	**27**

WAC 296-62-090 Physical agents.

WAC 296-62-09001 Definitions.

Noise. Unwanted sound or loud discordant or disagreeable sound or sounds.

Nonionizing radiation. As related to industrial sources, means electromagnetic radiation within the spectral range of approximately 200 nanometers to 3 kilometers including ultraviolet, visible, infrared and radiofrequency/microwave radiation. The electromagnetic spectrum is shown graphically in Figure 1 below.

ELECTROMAGNETIC SPECTRUM

Figure 1

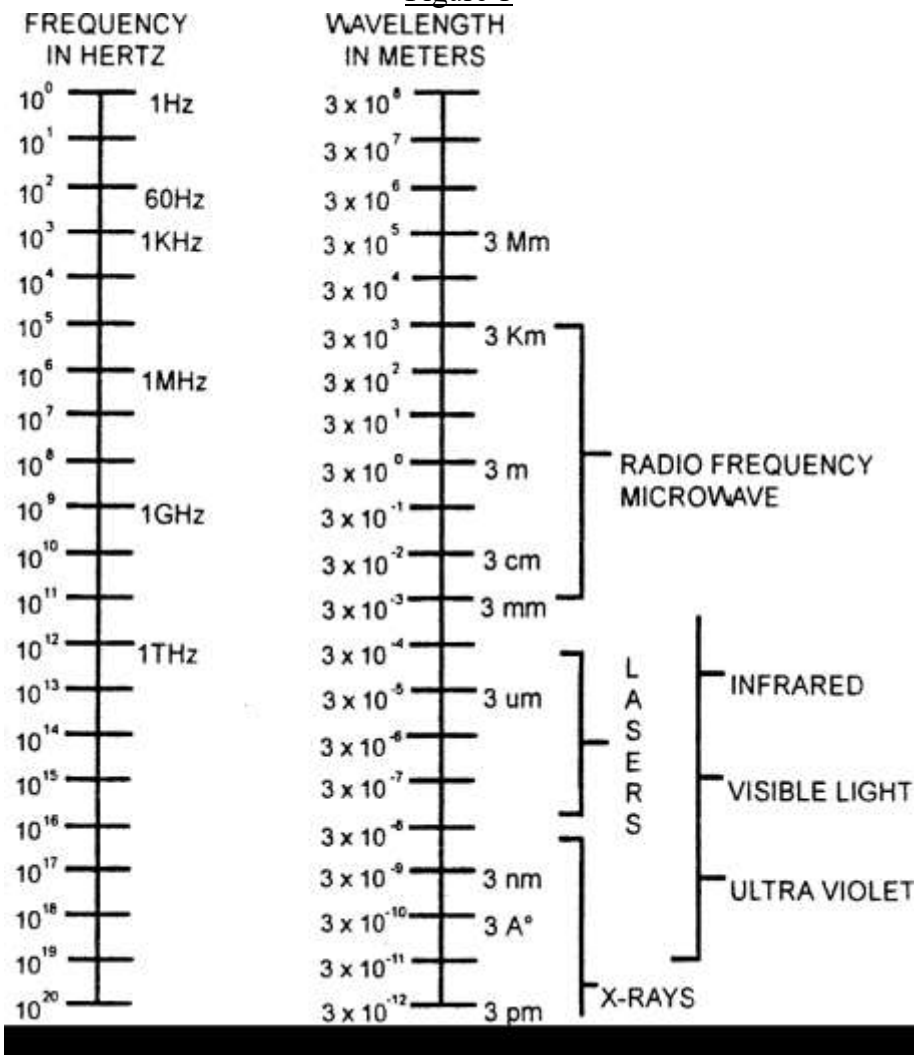

Physical agents. Must mean, but are not limited to: Illumination, ionizing radiation, nonionizing radiation, pressure, vibration, temperature and humidity, and noise.

Pressure is a barometric force. Positive pressure would be that above 14.7 lbs. per square inch absolute and negative pressure would be that below 14.7 lbs. per square inch absolute. 14.7 lbs. per square inch equals 760 mm. mercury.

Radiant heat. Infrared radiation emitted from hot surfaces.

Relative humidity. The percent of moisture in the air compared to the maximum amount of moisture the air could contain at the same temperature.

Temperature. The degree of hotness or coldness measured by use of a thermometer.

Vibration. Rapid movement to and fro or oscillating movement.

WAC 296-62-09004 Ionizing radiation.

(1) **Definitions applicable to this section.**

Note: Definitions also appear in some subsections.

(a) **Radiation**. Includes alpha rays, beta rays, gamma rays, x-rays, neutrons, high-speed electrons, high-speed protons, and other atomic particles; but such term does not include sound or radio waves, or visible light, or infrared or ultraviolet light.

(b) **Radioactive material**. Any material which emits, by spontaneous nuclear disintegration, corpuscular or electromagnetic emanations.

(c) **Restricted area**. Any area access to which is controlled by the employer for purposes of protection of individuals from exposure to radiation or radioactive materials.

(d) **Unrestricted area**. Any area access to which is not controlled by the employer for purposes of protection of individuals from exposure to radiation or radioactive materials.

(e) **Dose**. The quantity of ionizing radiation absorbed, per unit of mass, by the body or by any portion of the body. When the provisions in this section specify a dose during a period of time, the dose is the total quantity of radiation absorbed, per unit of mass, by the body or by any portion of the body during such period of time. Several different units of dose are in current use. Definitions of units used in this section are set forth in subdivisions (f) and (g) of this subsection.

(f) **Rad**. A measure of the dose of any ionizing radiation to body tissues in terms of the energy absorbed per unit of mass of the tissue. One rad is the dose corresponding to the absorption of 100 ergs per gram of tissue (1 millirad (mrad) = 0.001 rad).

(g) **Rem**. A measure of the dose of any ionizing radiation to body tissue in terms of its estimated biological effect relative to a dose of 1 roentgen (r) of x-rays (1 millirem (mrem) = 0.001 rem). The relation of the rem to other dose units depends upon the biological effect under consideration and upon the conditions for irradiation. Each of the following is considered to be equivalent to a dose of 1 rem:

(i) A dose of 1 roentgen due to x- or gamma radiation;

(ii) A dose of 1 rad due to x-, gamma, or beta radiation;

(iii) A dose of 0.1 rad due to neutrons or high energy protons;

(iv) A dose of 0.05 rad due to particles heavier than protons and with sufficient energy to reach the lens of the eye;

(v) If it is more convenient to measure the neutron flux, or equivalent, than to determine the neutron dose in rads, as provided in item (iii) of this subdivision, 1 rem of neutron radiation may, for purposes of the provisions in this section be assumed to be equivalent to 14 million neutrons per square centimeter incident upon the body; or, if there is sufficient information to estimate with reasonable accuracy the approximate distribution in energy of the neutrons, the incident number of neutrons per square centimeter equivalent to 1 rem may be estimated from the following table:

Neutron Flux Dose Equivalents		
Neutron Energy (millon electron volts (Mev))	**Number of Neutrons per Square centimeter Equivalent to a Dose of 1 rem (neutron/cm^2)**	**Average flux To deliver 100 millirem in 40 hours (neutrons/cm^2 per sec.)**
Thermal	970 X 10(6)	670
0.0001	720 X 10(6)	500
0.005	820 X 10(6)	570
0.02	400 X 10(6)	280
0.1	120 X 10(6)	80
0.5	43 X 10(6)	30
1.0	26 X 10(6)	18
2.5	29 X 19(6)	20
5.0	26 X 10(6)	18
7.5	24 X 10(6)	17
10	24 X 10(6)	17
10 to 30	14 X 10(6)	10

(h) For determining exposures to x- or gamma rays up to 3 Mev., the dose limits specified in this section may be assumed to be equivalent to the "air dose." For the purpose of this section **"air dose"** means that the dose is measured by a properly calibrated appropriate instrument in air at or near the body surface in the region of the highest dosage rate.

(i) **Curie**. A unit of measurement of radioactivity. One curie (Ci) is that quantity of radioactive material which decays at the rate of 2.2×10^{12} disintegrations per minute (dpm).

(i) One millicurie (mCi) = 10^{-3}Ci

(ii) One microcurie (uCi) = 10^{-6}Ci

(iii) One nanocurie (nCi) = 10^{-9}Ci

(iv) One picocurie (pCi) = 10^{-12}Ci

(2) **Nuclear Regulatory Commission licensees**--NRC contractors operating NRC plants and facilities.

(a) Any employer who possesses or uses source material, byproduct material, or special nuclear material, as defined in the Atomic Energy Act of 1954, as amended, under a license issued by the Nuclear Regulatory Commission and in accordance with the requirements of chapter 402-24 WAC must be deemed to be in compliance with the requirements of this section with respect to such possession and use.

(b) NRC contractors operating NRC plants and facilities: Any employer who possesses or uses source material, byproduct material, special nuclear material, or other radiation sources under a contract with the Nuclear Regulatory Commission for the operation of NRC plants and facilities and in accordance with the standards, procedures, and other requirements for radiation protection established by the commission for such contract pursuant to the Atomic Energy Act of 1954 as amended (42 U.S.C. 2011 et seq.) must be deemed to be in compliance with the requirements of this section with respect to such possession and use.

(c) State licensees or registrants:

(i) Atomic Energy Act sources. Any employer who possesses or uses source material, byproduct material, or special nuclear material, as defined in the Atomic Energy Act of 1954, as amended (42 U.S.C. 2011 et seq.), and has registered such sources with, the state must be deemed to be in compliance with the radiation requirements of this section, insofar as his possession and use of such material is concerned.

(ii) Other sources. Any employer who possesses or uses radiation sources other than source material, byproduct material, or special nuclear material, as defined in the Atomic Energy Act of 1954, as amended (42 U.S.C. 2011 et seq.), and has registered such sources with the state must be deemed to be in compliance with the radiation requirements of this section insofar as his possession and use of such material is concerned.

(3) **Exposure of individuals to radiation in restricted areas**.

(a) Except as provided in subdivision (b) of this subsection, no employer shall possess, use, or transfer sources of ionizing radiation in such a manner as to cause any individual in a restricted area to receive in any period of one calendar quarter from sources in the employer's possession or control a dose in excess of the limits specified in the following table:

Exposure in Restricted Areas	*Rems per Calendar Quarter*
Whole body. Head and trunk, active blood forming organs, lens of eyes, or gonads.	1-1/4
Hand and forearms, feet and ankles.	18-3/4
Skin of whole body.	7-1/2

(b) An employer may permit an individual in a restricted area to receive doses to the whole body greater than those permitted under subdivision (a) of this subsection, so long as:

(i) During any calendar quarter the dose to the whole body shall not exceed 3 rems; and

(ii) The dose to the whole body, when added to the accumulated occupational dose to the whole body, shall not exceed 5 (N-18) rems, where "N" equals the individual's age in years at his last birthday; and

(iii) The employer maintains adequate past and current exposure records which show that the addition of such a dose will not cause the individual to exceed the amount authorized in this subdivision. As used in this subdivision "Dose to the whole body" must be deemed to include any dose to the whole body, gonad, active blood-forming organs, head and trunk, or lens of the eye.

(c) No employer must permit any employee who is under 18 years of age to receive in any period of one calendar quarter a dose in excess of 10 percent of the limits specified in the preceding table entitled "exposure in restricted areas."

(d) **Calendar quarter**. Any 3-month period determined as follows:

(i) The first period of any year may begin on any date in January: Provided, That the second, third and fourth periods accordingly begin on the same date in April, July, and October, respectively, and that the fourth period extends into January of the succeeding year, if necessary to complete a 3-month quarter. During the first year of use of this method of determination, the first period for that year must also include any additional days in January preceding the starting date for the first period; or

(ii) The first period in a calendar year of 13 complete, consecutive calendar weeks; the second period in a calendar year of 13 complete consecutive weeks; the third period in a calendar year of 13 complete, consecutive calendar weeks; the fourth period in a calendar year of 13 complete, consecutive calendar weeks. If at the end of a calendar year there are any days not falling within a complete calendar week of that year, such days must be included within the last complete calendar week of that year. If at the beginning of any calendar year there are days not falling within a complete calendar week of that year, such days must be included within the last complete calendar week of the previous year; or

(iii) The four periods in a calendar year may consist of the first 14 complete, consecutive calendar weeks; the next 12 complete, consecutive calendar weeks, the next 14 complete, consecutive calendar weeks, and the last 12 complete, consecutive calendar weeks. If at the end of a calendar year there are any days not falling within a complete calendar week of that year, such days must be included (for purposes of this section) within the last complete calendar week of the year. If at the beginning of any calendar year there are days not falling within a complete calendar week of that year, such days must be included (for purposes of this section) within the last complete week of the previous year.

(e) No employer must change the method used by him to determine calendar quarters except at the beginning of a calendar year.

(4) **Exposure to airborne radioactive material**.

(a) No employer must possess, use or transport radioactive material in such a manner as to cause any employee, within a restricted area, to be exposed to airborne radioactive material in an average concentration in excess of the limits specified in Table I of WAC 402-24-220, Appendix A. The limits given in Table I are for exposure to the concentrations specified for 40 hours in any workweek of 7 consecutive days. In any such period where the number of hours of exposure is less than 40 the limits specified in the table may be increased proportionately. In any such period where the number of hours of exposure is greater than 40, the limits specified in the table shall be decreased proportionately.

(b) No employer shall possess, use, or transfer radioactive material in such a manner as to cause any individual within a restricted area, who is under 18 years of age, to be exposed to airborne radioactive material in an average concentration in excess of the limits specified in Table II of WAC 402-24-220, Appendix A.

For purposes of this subdivision, concentrations may be averaged over periods not greater than 1 week.

(c) **"Exposed"** as used in this subdivision means that the individual is present in an airborne concentration. No allowance shall be made for the use of protective clothing or equipment, or particle size.

(5) **Precautionary procedures and personal monitoring**.

(a) Every employer must make such surveys as may be necessary for him to comply with the provisions in this section. **"Survey"** means an evaluation of the radiation hazards incident to the production, use, release, disposal, or presence of radioactive materials or other sources of radiation under a specific set of conditions. When appropriate, such evaluation includes a physical survey of the location of materials and equipment, and measurements of levels of radiation or concentrations of radioactive material present.

(b) Every employer must supply appropriate personnel monitoring equipment, such as film badges, pocket chambers, pocket dosimeters, or film rings, to, and must require the use of such equipment by:

(i) Each employee who enters a restricted area under such circumstances that he receives, or is likely to receive, a dose in any calendar quarter in excess of 25 percent of the applicable value specified in subsection (3)(a) of this section; and

(ii) Each employee under 18 years of age who enters a restricted area under such circumstances that he receives, or is likely to receive a dose in any calendar quarter in excess of 5 percent of the applicable value specified in subsection (3)(a) of this section; and

(iii) Each employee who enters a high radiation area.

(c) As used in this section:

(i) **Personnel monitoring equipment**. Devices designed to be worn or carried by an individual for the purpose of measuring the dose received (e.g., film badges, pocket chambers, pocket dosimeters, film rings, etc.);

(ii) **Radiation area**. Any area, accessible to personnel, in which there exists radiation at such levels that a major portion of the body could receive in any 1 hour a dose in excess of 5 millirem, or in any 5 consecutive days a dose in excess of 100 millirem; and

(iii) **High radiation area**. Any area, accessible to personnel, in which there exists radiation at such levels that a major portion of the body could receive in any one hour a dose in excess of 100 millirem.

(6) **Caution signs, labels and signals**.

(a) General.

(i) Symbols prescribed by this subsection must use the conventional radiation caution colors (magenta or purple on yellow background). The symbol prescribed by this subsection is the conventional three-bladed design:

RADIATION SYMBOL

1. Cross-hatched area is to be magenta or purple.
2. Background is to be yellow.

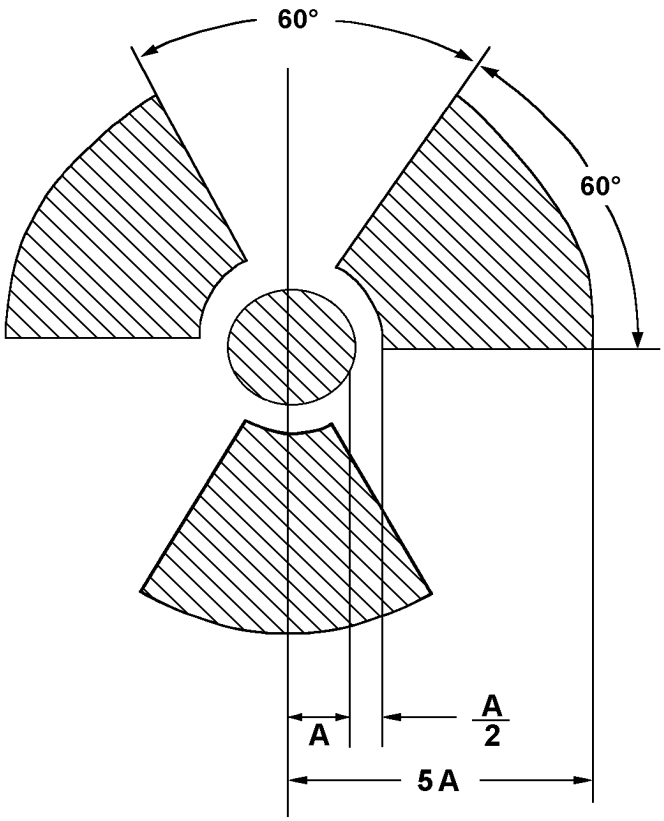

(ii) In addition to the contents of signs and labels prescribed in this subsection, employers may provide on or near such signs and labels any additional information which may be appropriate in aiding individuals to minimize exposure to radiation or to radioactive material.

(b) Radiation area. Each radiation area must be conspicuously posted with a sign or signs bearing the radiation caution symbol described in subdivision (a) of this subsection and the words:

CAUTION
RADIATION AREA

(c) High radiation area.

(i) Each high radiation area must be conspicuously posted with a sign or signs bearing the radiation caution symbol and the words:

CAUTION
HIGH RADIATION AREA

(ii) Each high radiation area must be equipped with a control device which must either cause the level of radiation to be reduced below that at which an individual might receive a dose of 100 millirems in 1 hour upon entry into the area or must energize a conspicuous visible or audible alarm signal in such a manner that the individual entering and the employer or a supervisor of the activity are made aware of the entry. In the case of a high radiation area established for a period of 30 days or less, such control device is not required.

(d) Airborne radioactivity area.

(i) As used in the provisions of this section, **"airborne radioactivity area"** means:

(A) Any room, enclosure, or operating area in which airborne radioactive materials, composed wholly or partly of radioactive material, exist in concentrations in excess of the amounts specified in column 1 of Table I of WAC 402-24-220, Appendix A.

(A) Any room, enclosure, or operating area in which airborne radioactive materials exist in concentrations which, averaged over the number of hours in any week during which individuals are in the area, exceed 25 percent of the amounts specified in column 1 of Table I of WAC 402-24-220, Appendix A.

(ii) Each airborne radioactivity area must be conspicuously posted with a sign or signs bearing the radiation caution symbol described in subdivision (a) of this subsection and the words:

CAUTION
AIRBORNE RADIOACTIVITY AREA

(e) Additional requirements.

(i) Each area or room in which radioactive material is used or stored and which contains any radioactive material (other than natural uranium or thorium) in any amount exceeding 10 times the quantity of such material specified in WAC 402-24-230, Appendix B must be conspicuously posted with a sign or signs bearing the radiation caution symbol described in subdivision (a) of this subsection and the words:

CAUTION
RADIOACTIVE MATERIALS

(ii) Each area or room in which natural uranium or thorium is used or stored in an amount exceeding 100 times the quantity of such material specified in chapter 402-24 WAC must be conspicuously posted with a sign or signs bearing the radiation caution symbol described in subdivision (a) of this subsection and the words:

CAUTION
RADIOACTIVE MATERIALS

(f) Containers.

(i) Each container in which is transported, stored, or used a quantity of any radioactive material (other than natural uranium or thorium) greater than the quantity of such material specified in WAC 402-24-230, Appendix B must bear a durable, clearly visible label bearing the radiation caution symbol described in subdivision (a) of this subsection and the words:

CAUTION
RADIOACTIVE MATERIALS

(ii) Each container in which natural uranium or thorium is transported, stored, or used in a quantity greater than 10 times the quantity specified in WAC 402-24-230, Appendix B must bear a durable, clearly visible label bearing the radiation caution symbol described in subdivision (a) of this subsection and the words:

CAUTION
RADIOACTIVE MATERIALS

(iii) Notwithstanding the provisions of items (i) and (ii) of this subdivision a label shall not be required:

(A) If the concentration of the material in the container does not exceed that specified in column 2 of Table I of WAC 402-24-220, Appendix A.

(A) For laboratory containers, such as beakers, flasks, and test tubes, used transiently in laboratory procedures, when the user is present.

(iv) Where containers are used for storage, the labels required in this subdivision must state also the quantities and kinds of radioactive materials in the containers and the date of measurement of the quantities.

(7) **Immediate evacuation warning signal**.

(a) Signal characteristics.

(i) The signal must be a midfrequency complex sound wave amplitude modulated at a subsonic frequency. The complex sound wave in free space must have a fundamental frequency f1 between 450 and 500 hertz (Hz) modulated at a subsonic rate between 4 and 5 hertz.

(ii) The signal generator must not be less than 75 decibels at every location where an individual may be present whose immediate, rapid, and complete evacuation is essential.

(iii) A sufficient number of signal units must be installed such that the requirements of item (i) of this subdivision are met at every location where an individual may be present whose immediate, rapid, and complete evacuation is essential.

(iv) The signal must be unique in the plant or facility in which it is installed.

(v) The minimum duration of the signal must be sufficient to ensure that all affected persons hear the signal.

(vi) The signal-generating system must respond automatically to an initiating event without requiring any human action to sound the signal.

(b) Design objectives.

(i) The signal-generating system must be designed to incorporate components which enable the system to produce the desired signal each time it is activated within one-half second of activation.

(ii) The signal-generating system must be provided with an automatically activated secondary power supply which is adequate to simultaneously power all emergency equipment to which it is connected, if operation during power failure is necessary, except in those systems using batteries as the primary source of power.

(iii) All components of the signal-generating system must be located to provide maximum practicable protection against damage in case of fire, explosion, corrosive atmosphere, or other environmental extremes consistent with adequate system performance.

(iv) The signal-generating system must be designed with the minimum number of components necessary to make it function as intended, and should utilize components which do not require frequent servicing such as lubrication or cleaning.

(v) Where several activating devices feed activating information to a central signal generator, failure of any activating device must not render the signal-generator system inoperable to activating information from the remaining devices.

(vi) The signal-generating system must be designed to enhance the probability that alarm occurs only when immediate evacuation is warranted. The number of false alarms must not be so great that the signal will come to be disregarded and shall be low enough to minimize personal injuries or excessive property damage that might result from such evacuation.

(c) Testing.

(i) Initial tests, inspections, and checks of the signal-generating system must be made to verify that the fabrication and installation were made in accordance with design plans and specifications and to develop a thorough knowledge of the performance of the system and all components under normal and hostile conditions.

(ii) Once the system has been placed in service, periodic tests, inspections, and checks must be made to minimize the possibility of malfunction.

(iii) Following significant alterations or revisions to the system, tests and checks similar to the initial installation tests must be made.

(iv) Tests must be designed to minimize hazards while conducting the tests.

(v) Prior to normal operation the signal-generating system shall be checked physically and functionally to ensures reliability and to demonstrate accuracy and performance. Specific tests must include:

(A) All power sources.

(A) Calibration and calibration stability.

(B) Trip levels and stability.

(C) Continuity of function with loss and return of required services such as AC or DC power, air pressure, etc.

(D) All indicators.

(E) Trouble indicator circuits and signals, where used.

(F) Air pressure (if used).

(G) Determine that sound level of the signal is within the limit of item (a)(ii) of this subsection at all points that require immediate evacuation.

(vi) In addition to the initial startup and operating tests, periodic scheduled performance tests and status checks must be made to ensure that the system is at all times operating within design limits and capable of the required response. Specific periodic tests or checks or both must include:

(A) Adequacy of signal activation device.

(A) All power sources.

(B) Function of all alarm circuits and trouble indicator circuits including trip levels.

(C) Air pressure (if used).

(D) Function of entire system including operation without power where required.

(E) Complete operational tests including sounding of the signal and determination that sound levels are adequate.

(vii) Periodic tests must be scheduled on the basis of need, experience, difficulty, and disruption of operations. The entire system should be operationally tested at least quarterly.

(viii) All employees whose work may necessitate their presence in an area covered by the signal shall be made familiar with the actual sound of the signal--preferably as it sounds at their work location. Before placing the system into operation, all employees normally working in the area must be made acquainted with the signal by actual demonstration at their work locations.

(8) **Exceptions from posting requirements.** Notwithstanding the provisions of subsection (6) of this section:

(a) A room or area is not required to be posted with a caution sign because of the presence of a sealed source, provided the radiation level 12 inches from the surface of the source container or housing does not exceed 5 millirem per hour.

(b) Rooms or other areas in onsite medical facilities are not required to be posted with caution signs because of the presence of patients containing radioactive material, provided that there are personnel in attendance who must take the precautions necessary to prevent the exposure of any individual to radiation or radioactive material in excess of the limits established in the provisions of this section.

(c) Caution signs are not required to be posted at areas or rooms containing radioactive materials for periods of less than 8 hours: Provided, that:

(i) The materials are constantly attended during such periods by an individual who must take the precautions necessary to prevent the exposure of any individual to radiation or radioactive materials in excess of the limits established in the provisions of this section; and

(ii) Such area or room is subject to the employer's control.

(9) **Exemptions for radioactive materials packaged for shipment**. Radioactive materials packaged and labeled in accordance with regulations of the Department of Transportation published in 49 CFR Chapter I, are exempt from the labeling and posting requirements of this section during shipment, provided that the inside containers are labeled in accordance with the provisions of subsection (6) of this section.

(10) **Instruction of personnel, posting.**

(a) Employers regulated by the Nuclear Regulatory Commission shall be governed by 10 CFR Part 20 standards. Employers conducting business in Washington state must be governed by the requirements of the laws and regulations of the state. All other employers must be regulated by the following:

(b) All individuals working in or frequenting any portion of a radiation area must be informed of the occurrence of radioactive materials or of radiation in such portions of the radiation area; must be instructed in the safety problems associated with exposure to such materials or radiation and in precautions or devices to minimize exposure; must be instructed in the applicable provisions of this section for the protection of employees from exposure to radiation or radioactive materials; and must be advised of reports of radiation exposure which employees may request pursuant to the regulations in this section.

(c) Each employer to whom this section applies must post a current copy of its provisions and a copy of the operating procedures applicable to the work conspicuously in such locations as to ensure that employees working in or frequenting radiation areas will observe these documents on the way to and from their place of employment, or must keep such documents available for examination of employees upon request.

(11) **Storage of radioactive materials.** Radioactive materials stored in a nonradiation area must be secured against unauthorized removal from the place of storage.

(12) **Waste disposal.** No employer must dispose of radioactive material except as provided for in WAC 402-24-130.

(13) **Notification of incidents.**

(a) Immediate notification. Each employer must immediately notify the industrial hygiene section, division of industrial safety and health for employees not protected by the Nuclear Regulatory Commission by means of 10 CFR Part 20; subsection (2)(b) of this section by telephone or telegraph of any incident involving radiation which may have caused or threatens to cause:

(i) Exposure of the whole body of any individual to 25 rems or more of radiation; exposure of the skin of the whole body of any individual to 150 rems or more of radiation; or exposure of the feet, ankles, hands, or forearms of any individual to 375 rems or more of radiation; or

(ii) The release of radioactive material in concentrations which, if averaged over a period of 24 hours, would exceed 5,000 times the limit specified for such materials in Table II of WAC 402-24-220, Appendix A.

(iii) A loss of 1 working week or more of the operation of any facilities affected; or

(iv) Damage to property in excess of $100,000.

(b) Twenty-four hour notification. Each employer must within 24 hours following its occurrence notify the industrial hygiene section, division of industrial safety and health, for employees not protected by the Nuclear Regulatory Commission by means of 10 CFR Part 20; subsection (2)(b) of this section, by telephone or telegraph of any incident involving radiation which may have caused or threatens to cause:

(i) Exposure of the whole body of any individual to 5 rems or more of radiation; exposure of the skin of the whole body of any individual to 30 rems or more of radiation; or exposure of the feet, ankles, hands, or forearms to 75 rems or more of radiation; or

(ii) A loss of 1 day or more of the operation of any facilities; or

(iii) Damage to property in excess of $10,000.

(14) **Reports of overexposure and excessive levels and concentrations**.

(a) In addition to any notification required by subsection (13) of this section each employer must make a report in writing within 30 days to the industrial hygiene section division of industrial safety and health, for employees not protected by the Nuclear Regulatory Commission by means of 10 CFR Part 20; or under subsection (2)(b) of this section, of each exposure of an individual to radiation or concentrations of radioactive material in excess of any applicable limit in this section. Each report required under this subdivision must describe the extent of exposure of persons to radiation or to radioactive material; levels of radiation and concentration of radioactive material involved, the cause of the exposure, levels of concentrations; and corrective steps taken or planned to ensure against a recurrence.

(b) In any case where an employer is required pursuant to the provisions of this subsection to report to the industrial hygiene section, division of industrial safety and health, any exposure of an individual to radiation or to concentrations of radioactive material, the employer must also notify such individual of the nature and extent of exposure. Such notice must be in writing and must contain the following statement: "You should preserve this report for future reference."

(15) **Records**.

(a) Every employer must maintain records of the radiation exposure of all employees for whom personnel monitoring is required under subsection (5) of this section and advise each of his employees of his individual exposure on at least an annual basis.

(b) Every employer must maintain records in the same units used in tables in subsection (2) of this section and WAC 402-24-220, Appendix A.

(16) **Disclosure to former employee of individual employee's record**.

(a) At the request of a former employee an employer must furnish to the employee a report of the employee's exposure to radiation as shown in records maintained by the employer pursuant to subdivision (15)(a) of this section. Such report must be furnished within 30 days from the time the request is made, and must cover each calendar quarter of the individual's employment involving exposure to radiation or such lesser period as may be requested by the employee. The report must also include the results of any calculations and analysis of radioactive material deposited in the body of the employee. The report must be in writing and contain the following statement: "You should preserve this report for future reference."

(b) The former employee's request should include appropriate identifying data, such as social security number and dates and locations of employment.

(17) (**Reserved**)

(18) **Radiation standards for mining**.

(a) For the purpose of this subsection, a "working level" is defined as any combination of radon daughters in 1 liter of air which will result in the ultimate emission of 1.3×10^5 million electron volts of potential alpha energy. The numerical value of the "working level" is derived from the alpha energy released by the total decay of short-lived radon daughter products in equilibrium with 100 picocuries of radon 222 per liter of air. A working level month is defined as the exposure received by a worker breathing air at one working level concentration for 4-1/3 weeks of 40 hours each.

(b) Occupational exposure to radon daughters in mines must be controlled so that no individual will receive an exposure of more than 2 working level months in any calendar quarter and no more than 4 working level months in any calendar year. Actual exposures must be kept as far below these values as practicable.

(c)

(i) For uranium mines, records of environmental concentrations in the occupied parts of the mine, and of the time spent in each area by each person involved in an underground work must be established and maintained. These records must be in sufficient detail to permit calculations of the exposures, in units of working level months, of the individuals and must be available for inspection by the industrial hygiene section, division of safety and health or their authorized representatives.

(ii) For other than uranium mines and for surface workers in all mines, item (i) of this subdivision will be applicable: Provided, however, That if no environmental sample shows a concentration greater than 0.33 working level in any occupied part of the mine, the maintenance of individual occupancy records and the calculation of individual exposures will not be required.

(d)

(i) At the request of an employee (or former employee) a report of the employee's exposure to radiation as shown in records maintained by the employer pursuant to subdivision (c) of this subsection must be furnished to them. The report must be in writing and contain the following statement:

"This report is furnished to you under the provisions of the state of Washington, Ionizing Radiation Safety and Health Standards (chapter 296-62 WAC). You should preserve this report for future reference."

(ii) The former employee's request should include appropriate identifying data, such as Social Security number and dates and locations of employment. See tables in WAC 402-24-220, Appendix A and 402-24-230, Appendix B.

WAC 296-62-09005 Nonionizing radiation.

(1) **Introduction**. Employees must be protected from exposure to hazardous levels of nonionizing radiation. Health standards have been established for ultraviolet, radiofrequency/microwave, and laser radiations which must be used to promote a healthful working environment. These standards refer to levels of nonionizing radiation and represent conditions under which it is believed that nearly all workers may be repeatedly exposed day after day without adverse effects. They are based on the best available information from experimental studies. Because of the wide variations in individual susceptibility, exposure of an occasional individual at, or even below, the permissible limit, may result in discomfort, aggravation of a preexisting condition, or physiological damage.

(a) Permissible exposure limits (PELs) refer to a time weighted average (TWA) of exposure for an 8-hour work day within a 40-hour workweek. Exceptions are those limits which are given a ceiling value.

(b) These PELs should be interpreted and applied only by technically qualified persons.

(c) Ceiling value. There are nonionizing radiations which produce physiological responses from short intense exposure and the PELs for these radiations are more appropriately based on this particular hazard. Nonionizing radiations with this type of hazard are best controlled by a ceiling value which is a maximum level of exposure which must not be exceeded.

(2) The employer must establish and maintain a program for the control and monitoring of nonionizing radiation hazards. This program must provide employees adequate supervision, training, facilities, equipment, and supplies, for the control and assessment of nonionizing radiation hazards.

(3) **Radiofrequency/microwave radiation permissible exposure limits**.

(a) Definition: **Partial body exposure**. The case in which only the hands and forearms or the feet and legs below the knee are exposed.

(b) Warning symbol.

(i) The warning symbol for radiofrequency/microwave radiation must consist of a red isosceles triangle above an inverted black isosceles triangle, separated and outlined by an aluminum color border. The words "Warning - Radiofrequency/microwave radiation hazard" must appear in the upper triangle. See Figure 1.

(ii) All areas where entry may result in an exposure to radiofrequency/microwave radiation in excess of the PEL must have a warning symbol prominently displayed at their entrance.

(iii) American National Standard Safety Color Code for Marking Physical Hazards and the Identification of Certain Equipment, Z53.1-1953, must be used for color specification. All lettering and the border must be of aluminum color.

(iv) The inclusion and choice of warning information or precautionary instructions is at the discretion of the user. If such information is included it must appear in the lower triangle of the warning symbol.

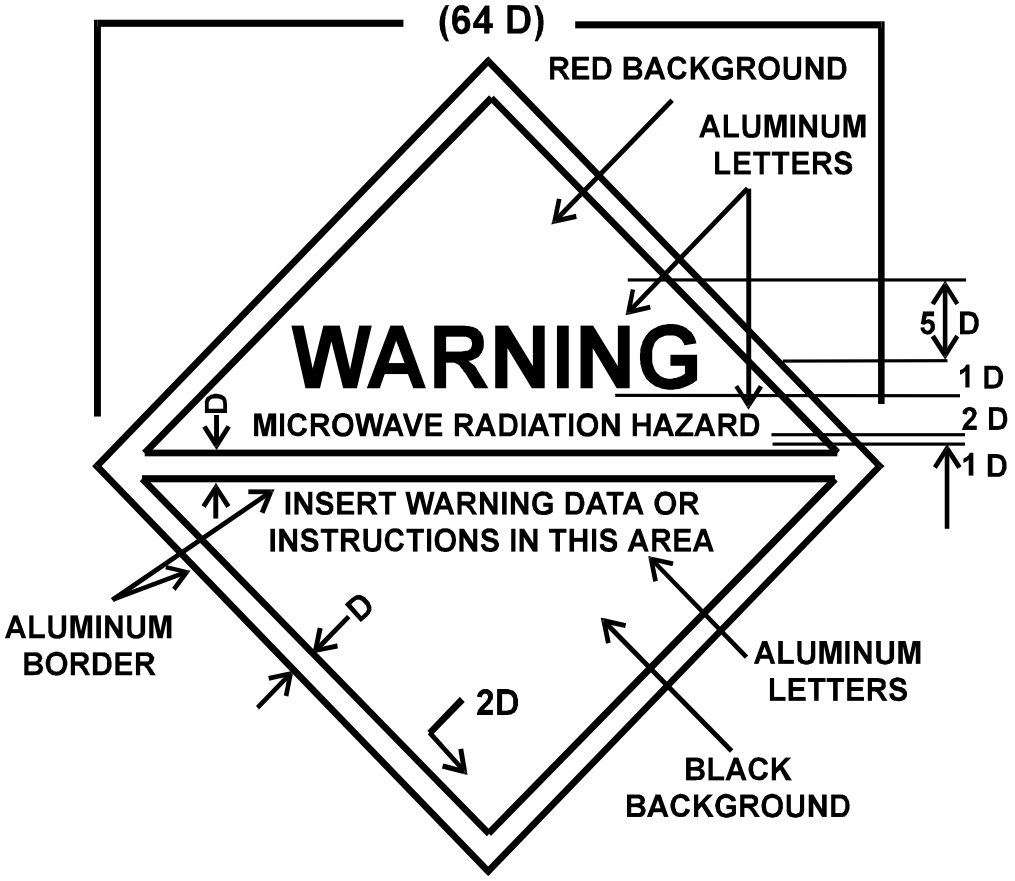

1. Place handling and mounting instructions on reverse side.
2. D = Scaling Unit.
3. Lettering: Ratio of letter height to thickness of letter lines.

Upper triangle:	5 to 1	Large
	6 to 1	Medium
Lower triangle:	4 to 1	Small
	6 to 1	Medium

4. Symbol is square, triangles are right-angle isosceles.

(c) These PELs refer to radiofrequency/microwave radiation exposures in the frequency range of 300 kHz to 100 GHz. Based on current knowledge, it is believed that workers may be exposed at these PELs without adverse health effects.

(i) Table I gives the PELs in terms of the mean squared electric (E^2) and magnetic (H^2) field strengths and in terms of the equivalent plane-wave free-space power density, as a function of frequency.

(ii) The average exposure for any 6 minute (0.1 hour) period must not exceed the PEL.

(iii) Measurements must be made at distances of 5 cm or greater from any object.

(iv) For mixed or broadband fields at a number of frequencies for which there are different PELs, the fraction of the PEL incurred within each frequency interval must be determined and the sum of these fractions must not exceed unity.

(v) PELs given in Table I for frequencies between 300 kHz and 1 GHz may be exceeded for partial body exposures if the output power of the radiating device is 7 watts or less.

Table I. Radiofrequency/Microwave Radiation Permissible Exposure Limits (PELs).

Frequency(f)	Power Density* mW/cm^2	Electric Field Strength Squared* V^2/m^2	Magnetic Field Strength Squared* A^2/m^2
0.3 to 3 MHz	100	400,000	2.5
3 to 30 MHz	$900/f^2$	$4000(900/f^2)$	$0.025(900/f^2)$
30 to 300 MHz	1.0	4000	0.025
300 to 1500 MHz	f/300	4000(f/300)	0.025(f/300)
1.5 to 100 GHz	5.0	20,0000	125

Note: f = frequency (MHz)

*Ceiling value`

(4) **Laser radiation permissible exposure limits**.

(a) Definitions.

(i) **Diffuse reflection**. A change of the spatial distribution of a beam of radiation when it is reflected in many directions by a surface or medium.

(ii) **Specular reflection**. A mirror like reflection.

(iii) **Accessible radiation**. **L**aser radiation to which human access is possible.

(b) All lasers and laser systems must be classified in accordance with the Federal Laser Product Performance Standards (21 CFR 1040.10) or, if manufactured prior to August 2, 1976, in accordance with ANSI Z136.1-1980.

(i) Class I. Laser systems that are considered to be incapable of producing damaging radiation levels and are thereby exempt from control measures. This is a no hazard category.

(ii) Class II. Visible wavelength laser systems that have a low hazard potential because of the expected aversion response. There is some possibility of injury if stared at. This is a low hazard category.

(iii) Class III. Laser systems in which intrabeam viewing of the direct beam or specular reflections of the beam may be hazardous. This class is further subdivided into IIIa and IIIb. This is a moderate hazard category.

(iv) Class IV. Laser systems whose direct or diffusely reflected radiation may be hazardous and where the beam may constitute a fire hazard. Class IV systems require the use of controls that prevent exposure of the eye and skin to specular or diffuse reflections of the beam. This is a high hazard category.

(c) Warning signs and classification labels shall be prepared in accordance with 21 CFR 1040.10 when classifying lasers and laser systems, and ANSI Z136.1 - 1980 when using classified lasers and laser systems. All signs and labels must be conspicuously displayed.

(i) The signal word "CAUTION" must be used with all signs and labels associated with Class II and Class IIIa lasers and laser systems.

(ii) The signal word "DANGER" MUST be used with all signs and labels associated with Class IIIb and Class IV lasers and laser systems.

(d) Personal protective equipment must be provided at no cost to the employee and must be worn whenever operational conditions or maintenance of lasers may result in a potentially hazardous exposure.

(i) Protective eyewear must be specifically designed for protection against radiation of the wavelength and radiant energy of the laser or laser system. Ocular exposure shall not exceed the recommendations of ANSI Z136.1 - 1980.

(ii) For Class IV lasers and laser systems protective eyewear must be worn for all operational conditions or maintenance which may result in exposures to laser radiation.

(e) Engineering controls must be used whenever feasible to reduce the accessible radiation levels for Class IV lasers and laser systems to a lower classification level. These controls may include, but are not limited to: Protective housings, interlocks, optical system attenuators, enclosed beam paths, remote controls, beam stops, and emission delays with audible warnings.

(f) All employees who may be exposed to laser radiation shall receive laser safety training. The training must ensure that the employees are knowledgeable of the potential hazards and control measures for the laser equipment in use.

(5) **Ultraviolet radiation**.

(a) These permissible exposure limits refer to ultraviolet radiation in the spectral region between 200 and 400 nanometer (nm) and represent conditions under which it is believed that nearly all workers may be repeatedly exposed without adverse effect. These values for exposure of the eye or the skin apply to ultraviolet radiation from arcs, gas, and vapor discharges, and incandescent sources, but do not apply to ultraviolet lasers or solar radiation. These levels should not be used for determining exposure of photosensitive individuals to ultraviolet radiation. These values must be used in the control of exposure to continuous sources where the exposure relation must not be less than 0.1 sec.

(b) The permissible exposure limit for occupational exposure to ultraviolet radiation incident upon skin or eye where irradiance values are known and exposure time is controlled are as follows:

(i) For the near ultraviolet spectral region (320 to 400 nanometer (nm)), total irradiance incident upon the unprotected skin or eye must not exceed 1.0 milliwatt/sq. centimeter for periods greater than 10_3 seconds (approximately 16 minutes) and for exposure times less than 10_3 seconds shall not exceed one Joule/sq. centimeter.

(ii) For the actinic ultraviolet spectral region (200 - 315 nm), radiant exposure incident upon the unprotected skin or eye must not exceed the values given in Table 4 within an 8-hour period.

(iii) To determine the effective irradiance of a broadband source weighted against the peak of the spectral effectiveness curve (270 nanometer (nm)), the following weighting formulas shall be used.

$E_{eff} = \Sigma$ (E-Lambda) (S-Lambda) (Delta-Lambda)

Where:

E_{eff} = effective irradiance relative to a monochromatic source at 270nm

E-Lambda = spectral irradiance in Watts/sq. centimeter/nanometer.

S-Lambda = relative spectral effectiveness (unitless)

Delta-Lambda = band width in nanometers

(iv) Permissible exposure time in seconds for exposure to actinic ultraviolet radiation incident upon the unprotected skin or eye may be computed by dividing 0.003 Joules/sq. centimeter by ^{E}eff in Watts/sq. centimeter. The exposure time may also be determined using Table 5 which provides exposure times corresponding to effective irradiances in $\mu W/cm^2$.

Table 4		
Relative PEL Wavelength Nanometer	**Spectral Millijoules/sq. Centimeters**	**Effectiveness S Lambda**
200	100	0.03
210	40	0.075
220	25	0.12
230	16	0.19
240	10	0.30
250	7.0	0.43
254	6.0	0.5
260	4.6	0.65
270	3.0	1.0
280	3.4	0.88
290	4.7	0.64
300	10	0.30
305	50	0.06
310	200	0.015
315	1000	0.003

Table 5	
Duration of Exposure Per Day	**Effective Irridance Eeff (μW/cm2)**
8 hrs.	0.1
4 hrs	0.2
2 hrs	0.4
1 hr.	0.8
1/2 hr.	1.7
15 min.	3.3
10 min.	5
5 min.	10
1 min.	50
30 sec.	100
10 sec.	300
1 sec.	3,000
0.5 sec.	6,000
0.1 sec.	30,000

TABLE 6

Densities and Transmissions (in Percent); also Tolerances in Densities and Transmissions of Various Shades of Glasses for Protection Against Injurious Rays

(Shades 3 to 8, inclusive, are for use in goggles, shades 10 to 14, inclusive, for welder's helmets and face shields)

[CODIFICATION NOTE: The graphic presentation of this table has been varied slightly in order that it would fall within the printing specifications for the Washington Administrative Code. In the following table, the original table had columns relating to (1) "Optical Density" which is now "Part 1," (2) "Total Visible Luminous Transmittance" and "Maximum total Infrared" which are now "Part 2," (3) "Maximum Ultraviolet Transmission" which is now "Part 3," and (4) "Recommended Uses" which is now "Part 4." These columns were all positioned side by side. In the new WAC format these are split up into four separate tables.]

Table 6--Part 1 Optical Density			
Shade No.	**Minimum O.D.**	**Standard O.D.**	**Maximum O.D.**
3.0	.64	.857	1.06
4.0	1.07	1.286	1.49
5.0	1.50	1.714	1.92
6.0	1.93	2.143	2.35
7.0	2.36	2.572	2.78
8	2.79	3.000	3.21
9	3.22	3.429	3.63
10	3.64	3.857	4.06
11	4.07	4.286	4.49
12	4.50	4.715	4.92
13	4.93	5.143	5.35
14	5.36	5.571	5.78

Table 6--Part 2 Total Visible Luminous Transmittance				
Shade No.	**Maximum %**	**Standard %**	**Minimum %**	**Maximum Total Infrared %**
3.0	22.9	13.9	8.70	9.0
4.0	8.51	5.18	3.24	5.0
5.0	3.16	1.93	1.20	2.5
6.0	1.18	.72	.45	1.5
7.0	.44	.27	.17	1.3
8	.162	.100	.062	1.0
9	.060	.037	.023	.8
10	.0229	.0139	.0087	.6
11	.0085	.0052	.0033	.5
12	.0032	.0019	.0012	.5
13	.00118	.00072	.00045	.4
14	.00044	.00027	.00017	.3

Table 6--Part 3 Maximum Ultraviolet Transmission				
Shade No.	**313mu %**	**334mu %**	**365mu %**	**405mu %**
3.0	.2	.2	.5	1.0
4.0	.2	.2	.5	1.0
5.0	.2	.2	.2	.5
6.0	.1	.1	.1	.5
7.0	.1	.1	.1	.5
8	.1	.1	.1	.5
9	.1	.1	.1	.5
10	.1	.1	.1	.5
11	.05	.05	.05	.1
12	.05	.05	.05	.1
13	.05	.05	.05	.1
14	.05	.05	.05	.1

Table 6--Part 4	
Shade No.	**Recommended Uses**
3.0	Glare of reflected sunlight from snow, water, sand, etc., stray light from cutting and welding metal pouring and work around furnaces and foundries.
4.0 5.0	Light acetylene cutting and welding, light electric spot welding.
6.0 7.0	Acetylene cutting and medium welding, arc welding up to 30 amperes.
8 9	Heavy acetylene welding, arc cutting and welding between 30 and 75 amperes.
10 11	Arc cutting and welding between 75 and 200 amperes.
12 13	Arc cutting and welding between 200 and 400 amperes.
14	Arc cutting and welding above 400 amperes.

a. American Standard Safety Code for the Protection of Heads, Eyes, and Respiratory Organs.

b. Standard density is defined as the logarithms (base 10) of the reciprocal of the transmission. Shade number is determined by the density according to the relations:

Shade number = 7/3 density + 1 with tolerances as given in the table.

> *Note: Safety glasses are available with lenses which protect the eyes against ultraviolet radiation.*

WAC 296-62-09007 Pressure.

(1) Employees exposed to pressures above normal atmospheric pressure which may produce physiological injury must adhere to decompression schedules or other tables as are or may be adopted by the department of labor and industries: for example, state of Washington "safety standards for compressed air work" and "safety standards for commercial diving operations." The employer must provide and supervise the use of decompression equipment and schedules in accordance with applicable requirements.

(2) If no specific requirements prevail for an unusual condition, a plan based on the recommendations of professionally qualified advisors, experienced with hazards associated with such exposures, must be followed by both the employer and employee.

WAC 296-62-09009 Vibration.

Reasonable precautions must be taken to protect workmen against the hazardous effects of unavoidable exposure to vibrations.

WAC 296-62-09013 Temperature, radiant heat, or temperature-humidity combinations.

Workmen subjected to temperature extremes, radiant heat, humidity, or air velocity combinations which, over a period of time, are likely to produce physiological responses which are harmful must be afforded protection by use of adequate controls, methods or procedures, or protective clothing. This must not be construed to apply to normal occupations under atmospheric conditions which may be expected in the area except that special provisions which are required by other regulations for certain areas or occupations must prevail.

WAC 296-62-095 Outdoor heat exposure.

WAC 296-62-09510 Scope and purpose.

(1) WAC 296-62-095 through 296-62-09560 applies to all employers with employees performing work in an outdoor environment.

(2) The requirements of WAC 296-62-095 through 296-62-09560 apply to outdoor work environments from May 1 through September 30, annually, only when employees are exposed to outdoor heat at or above an applicable temperature listed in Table 1.

To determine which temperature applies to each worksite, select the temperature associated with the general type of clothing or personal protective equipment (PPE) each employee is required to wear.

Table 1 Outdoor Temperature Action Levels	
All other clothing	89°
Double-layer woven clothes including coveralls, jackets and sweatshirts	77°
Nonbreathing clothes including vapor barrier clothing or PPE such as chemical resistant suits	52°

Note: There is no requirement to maintain temperature records. The temperatures in Table 1 were developed based on Washington state data and are not applicable to other states.

(3) WAC 296-62-095 through 296-62-09560 does not apply to incidental exposure which exists when an employee is not required to perform a work activity outdoors for more than fifteen minutes in any sixty-minute period. This exception may be applied every hour during the work shift.

(4) WAC 296-62-095 through 296-62-09560 supplement all industry-specific standards with related requirements. Where the requirements under these sections provide more specific or greater protection than the industry-specific standards, the employer must comply with the requirements under these sections. Additional related requirements are found in chapter 296-305 WAC, Safety standards for firefighters and chapter 296-307 WAC, Safety standards for agriculture.

WAC 296-62-09520 Definitions.

Acclimatization. The body's temporary adaptation to work in heat that occurs as a person is exposed to it over time.

Double-layer woven clothing. Clothing worn in two layers allowing air to reach the skin. For example, coveralls worn on top of regular work clothes.

Drinking water. Potable water that is suitable to drink. Drinking water packaged as a consumer product and electrolyte-replenishing beverages (i.e., sports drinks) that do not contain caffeine are acceptable.

Engineering controls. The use of devices to reduce exposure and aid cooling (i.e., air conditioning).

Environmental factors for heat-related illness. Working conditions that increase susceptibility for heat-related illness such as air temperature, relative humidity, radiant heat from the sun and other sources, conductive heat sources such as the ground, air movement, workload (i.e., heavy, medium, or low) and duration, and personal protective equipment worn by employees. Measurement of environmental factors is not required by WAC 296-62-095.

Heat-related illness. A medical condition resulting from the body's inability to cope with a particular heat load, and includes, but is not limited to, heat cramps, heat rash, heat exhaustion, fainting, and heat stroke.

Outdoor environment. An environment where work activities are conducted outside. Work environments such as inside vehicle cabs, sheds, and tents or other structures may be considered an outdoor environment if the environmental factors affecting temperature are not managed by engineering controls. Construction activity is considered to be work in an indoor environment when performed inside a structure after the outside walls and roof are erected.

Vapor barrier clothing. Clothing that significantly inhibits or completely prevents sweat produced by the body from evaporating into the outside air. Such clothing includes encapsulating suits, various forms of chemical resistant suits used for PPE, and other forms of nonbreathing clothing.

WAC 296-62-09530 Employer and employee responsibility.

(1) Employers of employees exposed at or above temperatures listed in WAC 296-62-09510(2) Table 1 must:

  (a) Address their outdoor heat exposure safety program in their written accident prevention program (APP); and

  (b) Encourage employees to frequently consume water or other acceptable beverages to ensure hydration.

(2) Employees are responsible for monitoring their own personal factors for heat-related illness including consumption of water or other acceptable beverages to ensure hydration.

WAC 296-62-09540 Drinking water.

(1) Keeping workers hydrated in a hot outdoor environment requires that more water be provided than at other times of the year. Federal OSHA and research indicate that employers should be prepared to supply at least one quart of drinking water per employee per hour. When employee exposure is at or above an applicable temperature listed in WAC 296-62-09510(2) Table 1:

(a) Employers must ensure that a sufficient quantity of drinking water is readily accessible to employees at all times; and

(b) Employers must ensure that all employees have the opportunity to drink at least one quart of drinking water per hour.

(2) Employers are not required to supply the entire quantity of drinking water needed to be supplied for all employees on a full shift at the beginning of the shift. Employers may begin the shift with smaller quantities of drinking water if effective procedures are established for replenishment during the shift.

WAC 296-62-09550 Responding to signs and symptoms of heat-related illness.

(1) Employees showing signs or demonstrating symptoms of heat-related illness must be relieved from duty and provided with a sufficient means to reduce body temperature.

(2) Employees showing signs or demonstrating symptoms of heat-related illness must be monitored to determine whether medical attention is necessary.

WAC 296-62-09560 Information and training.

All training must be provided to employees and supervisors, in a language the employee or supervisor understands, prior to outdoor work which exceeds a temperature listed in WAC 296-62-09510(2) Table 1, and at least annually thereafter.

(1) Employee training. Training on the following topics must be provided to all employees who may be exposed to outdoor heat at or above the temperatures listed in WAC 296-62-09510(2) Table 1:

(a) The environmental factors that contribute to the risk of heat-related illness;

(b) General awareness of personal factors that may increase susceptibility to heat-related illness including, but not limited to, an individual's age, degree of acclimatization, medical conditions, drinking water consumption, alcohol use, caffeine use, nicotine use, and use of medications that affect the body's responses to heat. This information is for the employee's personal use;

(c) The importance of removing heat-retaining personal protective equipment such as nonbreathable chemical resistant clothing during all breaks;

(d) The importance of frequent consumption of small quantities of drinking water or other acceptable beverages;

(e) The importance of acclimatization;

(f) The different types of heat-related illness, the common signs and symptoms of heat-related illness; and

(g) The importance of immediately reporting signs or symptoms of heat-related illness in either themselves or in co-workers to the person in charge and the procedures the employee must follow including appropriate emergency response procedures.

(2) Supervisor training. Prior to supervising employees working in outdoor environments with heat exposure at or above the temperature levels listed in WAC 296-62-09510(2) Table 1, supervisors must have training on the following topics:

(a) The information required to be provided to employees listed in subsection (1) of this section;

(b) The procedures the supervisor must follow to implement the applicable provisions of WAC 296-62-095 through 296-62-09560;

(c) The procedures the supervisor must follow if an employee exhibits signs or symptoms consistent with possible heat-related illness, including appropriate emergency response procedures; and

(d) Procedures for moving or transporting an employee(s) to a place where the employee(s) can be reached by an emergency medical service provider, if necessary.

PART L
ATMOSPHERES AND VENTILATION

WAC	Page
WAC 296-62-11015 Abrasive blasting.	1
WAC 296-62-11019 Spray-finishing operations.	1
WAC 296-62-135 Oxygen deficient atmospheres.	*9*
WAC 296-62-136 Ventilation.	*10*
296-62-13505 Definitions.	10
WAC 296-62-13610 Ventilation guide.	10
WAC 296-62-13615 Adequate system.	10
WAC 296-62-13620 Exhaust.	10
WAC 296-62-13625 Make-up air quality.	10
WAC 296-62-13630 Design and operation.	10
WAC 296-62-13635 Compatibility of systems.	11

WAC 296-62-11015 Abrasive blasting.

Abrasive blasting is covered in chapter 296-818 WAC, Abrasive blasting.

WAC 296-62-11019 Spray-finishing operations.

(1) Definitions.

(a) **Spray-finishing operations**. Employment of methods wherein organic or inorganic materials are utilized in dispersed form from deposit on surfaces to be coated, treated or cleaned. Such methods of deposit may involve either automatic, manual, or electrostatic deposition but do not include metal spraying or metallizing, dipping, flow coating, roller coating, tumbling, centrifuging, or spray washing and degreasing as conducted in self-contained washing and degreasing machines or systems.

(b) **Spray booth**. Spray booths are defined and described in WAC 296-24-370 through 296-24-37007. (See sections 103, 104, and 105 of the Standard for Spray Finishing Using Flammable and Combustible Materials, NFPA No. 33-1969.)

(c) **Spray room**. A room in which spray-finishing operations not conducted in a spray booth are performed separately from other areas.

(d) **Minimum maintained velocity**. The velocity of air movement which must be maintained in order to meet minimum specified requirements for health and safety.

(2) **Location and application.** Spray booths or spray rooms are to be used to enclose or confine all operations. Spray-finishing operations must be located as provided in sections 201 through 206 of the Standard for Spray Finishing Using Flammable and Combustible Materials, NFPA No. 33-1969.

(3) **Design and construction of spray booths**.

(a) Spray booths must be designed and constructed in accordance with WAC 296-24-370 through 296-24-37007 (see sections 301-304 and 306-310 of the Standard for Spray Finishing Using Flammable and Combustible Materials, NFPA No. 33-1969), for general construction specifications.

> *Note: For a more detailed discussion of fundamentals relating to this subject, see ANSI Z9.2-1960.*

(i) Lights, motors, electrical equipment and other sources of ignition must conform to the requirements of WAC 296-24-370. (See section 310 and chapter 4 of the Standard for Spray Finishing Using Flammable and Combustible Materials, NFPA No. 33-1969.)

(ii) In no case must combustible material be used in the construction of a spray booth and supply or exhaust duct connected to it.

(b) Unobstructed walkways must not be less than 6 1/2 feet high and must be maintained clear of obstruction from any work location in the booth to a booth exit or open booth front. In booths where the open front is the only exit, such exits must be not less than 3 feet wide. In booths having multiple exits, such exits must not be less than 2 feet wide, provided that the maximum distance from the work location to the exit is 25 feet or less. Where booth exits are provided with doors, such doors shall open outward from the booth.

(c) Baffles, distribution plates, and dry-type overspray collectors must conform to the requirements of WAC 296-24-370. (See sections 304 and 305 of the Standard for Spray Finishing Using Flammable and Combustible Materials, NFPA No. 33-1969.)

(i) Overspray filters must be installed and maintained in accordance with the requirements of WAC 296-24-370, (See section 305 of the Standard for Spray Finishing Using Flammable and Combustible Materials, NFPA No. 33-1969), and must only be in a location easily accessible for inspection, cleaning, or replacement.

(ii) Where effective means, independent of the overspray filters are installed which will result in design air distribution across the booth cross section, it is permissible to operate the booth without the filters in place.

(d)

(i) For wet or water-wash spray booths, the water-chamber enclosure, within which intimate contact of contaminated air and cleaning water or other cleaning medium is maintained, if made of steel, must be 18 gauge or heavier and adequately protected against corrosion.

(ii) Chambers may include scrubber spray nozzles, headers, troughs, or other devices. Chambers must be provided with adequate means for creating and maintaining scrubbing action for removal of particulate matter from the exhaust air stream.

(e) Collecting tanks must be of welded steel construction or other suitable noncombustible material. If pits are used as collecting tanks, they must be concrete, masonry, or other material having similar properties.

(i) Tanks must be provided with weirs, skimmer plates, or screens to prevent sludge and floating paint from entering the pump suction box. Means for automatically maintaining the proper water level must also be provided. Fresh water inlets must not be submerged. They must terminate at least one pipe diameter above the safety overflow level of the tank.

(ii) Tanks must be so constructed as to discourage accumulation of hazardous deposits.

(f) Pump manifolds, risers, and headers must be adequately sized to ensure sufficient water flow to provide efficient operation of the water chamber.

(4) **Design and construction of spray rooms**.

(a) Spray rooms, including floors, must be constructed of masonry, concrete, or other noncombustible material.

(b) Spray rooms must have noncombustible fire doors and shutters.

(c) Spray rooms must be adequately ventilated so that the atmosphere in the breathing zone of the operator must be maintained in accordance with the requirements of (6)(b) of this section.

(d) Spray rooms used for production spray-finishing operations must conform to the requirements of spray booths.

(5) **Ventilation**.

(a) Ventilation must be provided in accordance with provisions of WAC 296-24-370, (See chapter 5 of the Standard for Spray Finishing Using Flammable or Combustible Materials, NFPA No. 33-1969), and in accordance with the following:

(i) Where a fan plenum is used to equalize or control the distribution of exhaust air movement through the booth, it must be of sufficient strength or rigidity to withstand the differential air pressure or other superficially imposed loads for which the equipment is designed and also to facilitate cleaning. Construction specifications must be at least equivalent to those of (5)(c) of this section.

(ii) All fan ratings must be in accordance with Air Moving and Conditioning Association Standard Test Code for Testing Air Moving Devices, Bulletin 210, April 1962.

(b) Inlet or supply ductwork used to transport makeup air to spray booths or surrounding areas must be constructed of noncombustible materials.

(i) If negative pressure exists within inlet ductwork, all seams and joints must be sealed if there is a possibility of infiltration of harmful quantities of noxious gases, fumes, or mists from areas through which ductwork passes.

(ii) Inlet ductwork must be sized in accordance with volume flow requirements and provide design air requirements at the spray booth.

(iii) Inlet ductwork must be so supported throughout its length to sustain at least its own weight plus any negative pressure which is exerted upon it under normal operating conditions.

(c) Ducts must be so constructed as to provide structural strength and stability at least equivalent to sheet steel of not less than the following thickness:

Diameter or Greater Dimension	
	(U.S. gauge)
Up to 8 inches inclusive	No. 24
Over 8 inches to 18 inches inclusive	No. 22
Over 18 inches to 30 inches inclusive	No. 20
Over 30 inches	No. 18

(i) Exhaust ductwork must be adequately supported throughout its length to sustain its weight plus any normal accumulation in interior during normal operating conditions and any negative pressure exerted upon it.

(ii) Exhaust ductwork must be sized in accordance with good design practice which shall include consideration of fan capacity, length of duct, number of turns and elbows, variation in size, volume, and character of materials being exhausted. See American National Standard Z9.2-1960 for further details and explanation concerning elements of design.

(iii) Longitudinal joints in sheet steel ductwork must be either lock-seamed, riveted, or welded. For other than steel construction, equivalent securing of joints must be provided.

(iv) Circumferential joints in ductwork must be substantially fastened together and lapped in the direction of airflow. At least every fourth joint must be provided with connecting flanges, bolted together or of equivalent fastening security.

(v) Inspection or clean-out doors must be provided for every 9 to 12 feet of running length for ducts up to 12 inches in diameter, but the distance between clean-out doors may be greater for larger pipes. (See 8.3.21 of American National Standard Z9.1-1960.) A clean-out door or doors must be provided for servicing the fan, and where necessary, a drain shall be provided.

(vi) Where ductwork passes through a combustible roof or wall, the roof or wall must be protected at the point of penetration by open space or fire-resistive material between the duct and the roof or wall. When ducts pass through fire-walls, they must be provided with automatic fire dampers on both sides of the wall, except that three-eighth-inch steel plates may be used in lieu of automatic fire dampers for ducts not exceeding 18 inches in diameter.

(vii) Ductwork used for ventilating any process covered in this standard must not be connected to ducts ventilating any other process or any chimney or flue used for conveying any products of combustion.

(6) **Velocity and air flow requirements**.

(a) Except where a spray booth has an adequate air replacement system, the velocity of air into all openings of a spray booth must be not less than that specified in Table 14 for the operating conditions specified. An adequate air replacement system is one which introduces replacement air upstream or above the object being sprayed and is so designed that the velocity of air in the booth cross section is not less than that specified in Table 14 when measured upstream or above the object being sprayed.

Table 14 Minimum Maintained Velocities into Spray Booths			
Operating Airflow conditions For object Completely inside booth	**Crossdraft f.p.m.**	**Airflow Velocities f.p.m.**	
		Design	**Range**
Electrostatic and automatic airless operation contained in booth without operator.	Negligible	50 large booth 100 small booth	50-75 75-125
Air-operated guns, manual or automatic	Up to 50	100 large booth 150 small booth	75-125 125-175
Air-operated guns, manual or automatic	Up to 100	150 large booth 200 small booth	125-175 150-250

Notes:

(1) Attention is invited to the fact that the effectiveness of the spray booth is dependent upon the relationship of the depth of the booth to its height and width.

(2) Crossdrafts can be eliminated through proper design and such design should be sought. Crossdrafts in excess of 100 fpm (feet per minute) should not be permitted.

(3) Excessive air pressures result in loss of both efficiency and material waste in addition to creating a backlash that may carry overspray and fumes into adjacent work areas.

(4) Booths should be designed with velocity shown in the column headed "Design." However, booths operating with velocities shown in the column headed "Range" are in compliance with this standard.

(b) In addition to the requirements in (6)(a) of this section the total air volume exhausted through a spray booth must be such as to dilute solvent vapor to at least 25 percent of the lower explosive limit of the solvent being sprayed. An example of the method of calculating this volume is given below.

Example: To determine the lower explosive limits of the most common solvents used in spray finishing, see Table 15. Column 1 gives the number of cubic feet of vapor per gallon of solvent and column 2 gives the lower explosive limit (LEL) in percentage by volume of air. Note that the quantity of solvent will be diminished by the quantity of solids and nonflammable contained in the finish.

To determine the volume of air in cubic feet necessary to dilute the vapor from 1 gallon of solvent to 25 percent of the lower explosive limit, apply the following formula:

$$\text{Dilution volume required per gallon of solvent} = \frac{4\,(100\text{-LEL})\,(\text{cubic feet of vapor per gallon})}{\text{LEL}}$$

Using toluene as the solvent.

(1) LEL of toluene from Table 15, column 2, is 1.4 percent.

(2) Cubic feet of vapor per gallon from Table 15, column 1, is 30.4 cubic feet per gallon.

(3) Dilution volume required =

$$\frac{4\,(100\text{-}1.4)\,30.4}{1.4} = 8{,}564 \text{ cubic feet.}$$

(4) To convert to cubic feet per minute of required ventilation, multiply the dilution volume required per gallon of solvent by the number of gallons of solvent evaporated per minute.

Table 15 Lower Explosive Limit of Some Commonly Used Solvents		
Solvent	**Cubic feet of vapor per gallon of liquid at 70°F.**	**Lower explosive limit in percent by volume of air at 70°F.**
	Column 1	Column 2
Acetone	44.0	2.6
Amyl Acetate (iso)	21.6	1.0*
Amyl Alcohol (n)	29.6	1.2
Amyl Alcohol (iso)	29.6	1.2
Benzene	36.8	1.4*
Butyl Acetate (n)	24.8	1.7
Butyl Alcohol (n)	35.2	1.4
Butyl Cellosolve	24.8	1.1
Cellosolve	33.6	1.8
Cellosolve Acetate	23.2	1.7
Cyclohexanone	31.2	1.1*
1,1 Dichloroethylene	42.4	5.6
1,2 Dichloroethylene	42.4	9.7
Ethyl Acetate	32.8	2.5
Ethyl Alcohol	55.2	4.3
Ethyl Lactate	28.0	1.5*
Methyl Acetate	40.0	3.1
Methyl Alcohol	80.8	7.3
Methyl Cellosolve	40.8	2.5
Methyl Ethyl Ketone	36.0	1.8
Methyl n-Propyl Ketone	30.4	1.5
Naphtha (VM&P) (76° Naphtha) Naphtha (100° Flash)	22.4	0.9
Safety solvent-Stoddard Solvent	23.2	1.1
Propyl Acetate(n)	27.2	2.0
Propyl Acetate (iso)	28.0	1.8
Propyl Alcohol (n)	44.8	2.1
Propyl Alcohol (iso)	44.0	2.0
Toluene	30.4	1.4
Turpentine	20.8	0.8
Xylene (o)	26.4	1.0

* At 212°F

(c)

(i) When an operator is in a booth downstream of the object being sprayed, an air-supplied respirator or other type of respirator certified by NIOSH under 42 CFR part 84 for the material being sprayed should be used by the operator.

(ii) Where downdraft booths are provided with doors, such doors must be closed when spray painting.

(7) **Make-up air**.

(a) Clean fresh air, free of contamination from adjacent industrial exhaust systems, chimneys, stacks, or vents, must be supplied to a spray booth or room in quantities equal to the volume of air exhausted through the spray booth.

(b) Where a spray booth or room receives make-up air through self-closing doors, dampers, or louvers, they must be fully open at all times when the booth or room is in use for spraying. The velocity of air through such doors, dampers, or louvers must not exceed 200 feet per minute. If the fan characteristics are such that the required air flow through the booth will be provided, higher velocities through the doors, dampers, or louvers may be used.

(c)

(i) Where the air supply to a spray booth or room is filtered, the fan static pressure must be calculated on the assumption that the filters are dirty to the extent that they require cleaning or replacement.

(ii) The rating of filters must be governed by test data supplied by the manufacturer of the filter. A pressure gauge must be installed to show the pressure drop across the filters. This gauge must be marked to show the pressure drop at which the filters require cleaning or replacement. Filters must be replaced or cleaned whenever the pressure drop across them becomes excessive or whenever the air flow through the face of the booth falls below that specified in Table 14.

(d)

(i) Means of heating make-up air to any spray booth or room, before or at the time spraying is normally performed, must be provided in all places where the outdoor temperature may be expected to remain below 55° F. for appreciable periods of time during the operation of the booth except where adequate and safe means of radiant heating for all operating personnel affected is provided. The replacement air during the heating seasons must be maintained at not less than 65° F. at the point of entry into the spray booth or spray room. When otherwise unheated make-up air would be at a temperature of more than 10° F. below room temperature, its temperature must be regulated as provided in section 3.6 of ANSI Z9.2-1960.

(ii) As an alternative to an air replacement system complying with the preceding section, general heating of the building in which the spray room or booth is located may be employed provided that all occupied parts of the building are maintained at not less than 65° F. when the exhaust system is in operation or the general heating system supplemented by other sources of heat may be employed to meet this requirement.

(iii) No means of heating make-up air must be located in a spray booth.

(iv) Where make-up air is heated by coal or oil, the products of combustion must not be allowed to mix with the make-up air, and the products of combustion must be conducted outside the building through a flue terminating at a point remote from all points where make-up air enters the building.

(v) Where make-up air is heated by gas, and the products of combustion are not mixed with the make-up air but are conducted through an independent flue to a point outside the building remote from all points where make-up air enters the building, it is not necessary to comply with (7)(d)(vi) of this section.

(vi) Where make-up air to any manually operated spray booth or room is heated by gas and the products of combustion are allowed to mix with the supply air, the following precautions must be taken:

(A) The gas must have a distinctive and strong enough odor to warn workmen in a spray booth or room of its presence if in an unburned state in the make-up air.

(B) The maximum rate of gas supply to the make-up air heater burners must not exceed that which would yield in excess of 200 p.p.m. (parts per million) of carbon monoxide or 2,000 p.p.m. of total combustible gases in the mixture if the unburned gas upon the occurrence of flame failure were mixed with all of the make-up air supplied.

(C) A fan must be provided to deliver the mixture of heated air and products of combustion from the plenum chamber housing the gas burners to the spray booth or room.

(8) **Scope**. Spray booths or spray rooms are to be used to enclose or confine all spray finishing operations covered by this paragraph. This paragraph does not apply to the spraying of the exteriors of buildings, fixed tanks, or similar structures, nor to small portable spraying apparatus not used repeatedly in the same location.

WAC 296-62-135 Oxygen deficient atmospheres.

(1) **Definition**. A lack of sufficient oxygen is deemed to exist if the atmosphere at sea level has less than 19.5% oxygen by volume or has a partial pressure of oxygen of 148 millimeters of mercury (mm Hg) or less. This may deviate when working at higher elevations and should be determined for an individual location. Factors such as acclimatization, physical conditions of the persons involved, etc., must be considered for such circumstances and conditions.

(2) **Entering areas with possible oxygen deficient atmospheres**. Workers entering any area where a lack of sufficient oxygen is probable must be supplied with and must use approved equipment (for specific requirements see applicable provisions of chapters 296-62, 296-307 (Part-U3), 296-809 and 296-841 WAC) capable of providing safe respirable air, or prior to entry and at all times when workers are in such areas a sufficient supply of safe, respirable air must be provided. All workers so exposed must be under constant observation. If the oxygen content is unknown or may change during occupation, tests must be required prior to and during occupation of questionable areas.

WAC 296-62-136 Ventilation.

WAC 296-62-13605 Definition.

Ventilation. The provision, circulation or exhausting of air into or from an area or space.

Dilution ventilation. Inducing and mixing uncontaminated air with contaminated air in such quantities that the resultant mixture in the breathing zone will not exceed the permissible exposure limit (PEL) specified for any contaminant.

Exhaust ventilation. The general movement of air out of the area or permit-required confined space by mechanical or natural means.

Local exhaust ventilation. The mechanical removal of contaminated air from the point where the contaminant is being generated or liberated.

Tempered make-up air. Air which has been conditioned by changing its heat content to obtain a specific desired temperature.

WAC 296-62-13610 Ventilation guide.

In addition to those mandatory controls as set forth in WAC 296-62-11019, chapter 296-818 WAC, Abrasive blasting, chapter 296-835 WAC, Dipping and coating operations (dip tanks), the *Industrial Ventilation Manual of Recommended Practices* as compiled and approved by the American Conference of Governmental Industrial Hygienists, applicable ANSI Standard or other National Consensus Standards recommended by the federal government, should be used as a guide for ventilation requirements.

WAC 296-62-13615 Adequate system.

Adequate ventilation systems must be installed as needed to control concentrations of airborne contaminants below applicable threshold limit values.

WAC 296-62-13620 Exhaust.

Exhaust from ventilation systems must discharge in such a manner that the contaminated air being exhausted will not present a health hazard to any workman or reenter buildings in harmful amounts.

WAC 296-62-13625 Make-up air quality.

Make-up air must be of ample quantity to replace the exhausted air and shall be tempered when necessary.

WAC 296-62-13630 Design and operation.

Ventilation systems must be designed and operated in such a manner that employees will not be subjected to excessive air velocities.

WAC 296-62-13635 Compatibility of systems.

Make-up air systems must be designed and operated in such a manner that they will not interfere with the effectiveness of the exhaust air system.

PART N
COTTON DUST

WAC **Page**

WAC 296-62-14533 Cotton dust. 1

WAC 296-62-14535 Appendix A--Air sampling and analytical procedures for determining concentrations of cotton dust. 14

WAC 296-62-14537 Appendix B-I through B-III--Respiratory questionnaire. 18

WAC 296-62-14539 Appendix C--Spirometry prediction tables for normal males and females. 33

WAC 296-62-14541 Appendix D--Pulmonary function standards for cotton dust standard. 41

WAC 296-62-14543 Appendix E--Vertical elutriator equivalency protocol. 43

WAC 296-62-14533 Cotton dust.

(1) **Scope and application**.

(a) This section, in its entirety, applies to the control of employee exposure to cotton dust in all workplaces where employees engage in yarn manufacturing, engage in slashing and weaving operations, or work in waste houses for textile operations.

(b) This section does not apply to the handling or processing of woven or knitted materials; to maritime operations covered by chapters 296-56 and 296-304 WAC; to harvesting or ginning of cotton; or to the construction industry.

(c) Only subsection (8) of this section, Medical surveillance, subsection (11) (b) of this section, Medical surveillance, subsection (11)(c) of this section, Availability, subsection (11)(d) of this section, Transfer of records, and Appendices B, C, and D of this section apply in all work places where employees exposed to cotton dust engage in cottonseed processing or waste processing operations.

(d) This section applies to yarn manufacturing and slashing and weaving operations exclusively using washed cotton (as defined by subsection (14) of this section) only to the extent specified by subsection (14) of this section.

(e) This section, in its entirety, applies to the control of all employees exposure to the cotton dust generated in the preparation of washed cotton from opening until the cotton is thoroughly wetted.

(f) This section does not apply to knitting, classing or warehousing operations except that employers with these operations, if requested by WISHA, must grant WISHA access to their employees and workplaces for exposure monitoring and medical examinations for purposes of a health study to be performed by WISHA on a sampling basis.

(2) **Definitions applicable to this section**:

(a) **Blow down**. The cleaning of equipment and surfaces with compressed air.

(b) **Blow off**. The use of compressed air for cleaning of short duration and usually for a specific machine or any portion of a machine.

(c) **Cotton dust**. Dust present in the air during the handling or processing of cotton, which may contain a mixture of many substances including ground-up plant matter, fiber, bacteria, fungi, soil, pesticides, noncotton plant matter and other contaminants which may have accumulated with the cotton during the growing, harvesting and subsequent processing or storage periods. Any dust present during the handling and processing of cotton through the weaving or knitting of fabrics, and dust present in other operations or manufacturing processes using raw or waste cotton fibers or cotton fiber byproducts from textile mills are considered cotton dust within this definition. Lubricating oil mist associated with weaving operations is not considered cotton dust.

(d) **Director**. The director of labor and industries or their authorized representative.

(e) **Equivalent instrument**. A cotton dust sampling device that meets the vertical elutriator equivalency requirements as described in subsection (4)(a)(iii) of this section.

(f) **Lint-free respirable cotton dust**. Particles of cotton dust of approximately 15 microns or less aerodynamic equivalent diameter.

(g) **Vertical elutriator cotton dust sampler or vertical elutriator**. A dust sampler which has a particle size cut-off at approximately 15 microns aerodynamic equivalent diameter when operating at the flow rate of 7.4 ±0.2 liters per minute.

(h) **Waste processing**. Waste recycling (sorting, blending, cleaning and willowing) and garnetting.

(i) **Yarn manufacturing**. All textile mill operations from opening to, but not including, slashing and weaving.

(3) **Permissible exposure limits and action levels**.

(a) Permissible exposure limits (PEL).

(i) The employer must ensure that no employee who is exposed to cotton dust in yarn manufacturing and cotton washing operations is exposed to airborne concentrations of lint-free respirable cotton dust greater than 200 $\mu g/m^3$ mean concentration, averaged over an eight-hour period, as measured by a vertical elutriator or an equivalent instrument.

(ii) The employer must ensure that no employee who is exposed to cotton dust in textile mill waste house operations or is exposed in yarn manufacturing to dust from "lower grade washed cotton" as defined in subsection (14)(e) of this section is exposed to airborne concentrations of lint-free respirable cotton dust greater than 500 $\mu g/m^3$ mean concentration, averaged over an eight-hour period, as measured by a vertical elutriator or an equivalent instrument.

(iii) The employer must ensure that no employee who is exposed to cotton dust in the textile processes known as slashing and weaving is exposed to airborne concentrations of lint-free respirable cotton dust greater than 750 μ/m^3 mean concentration, averaged over an eight-hour period, as measured by a vertical elutriator or an equivalent instrument.

(b) Action levels.

(i) The action level for yarn manufacturing and cotton washing operations is an airborne concentration of lint-free respirable cotton dust of 100 μ/m^3 mean concentration, averaged over an eight-hour period, as measured by a vertical elutriator or an equivalent instrument.

(ii) The action level for waste houses for textile operations is an airborne concentration of lint-free respirable cotton dust of 250 $\mu g/m^3$ mean concentration, averaged over an eight-hour period, as measured by a vertical elutriator or an equivalent instrument.

(iii) The action level for the textile processes known as slashing and weaving is an airborne concentration of lint-free respirable cotton dust of 375 $\mu g/m^3$ mean concentration, averaged over an eight-hour period, as measured by a vertical elutriator or an equivalent instrument.

(4) **Exposure monitoring and measurement**.

(a) General.

(i) For the purposes of this section, employee exposure is that exposure which would occur if the employee were not using a respirator.

(ii) The sampling device to be used must be either the vertical elutriator cotton dust sampler or an equivalent instrument.

(iii) If an alternative to the vertical elutriator cotton dust sampler is used, the employer must establish equivalency by demonstrating that the alternative sampling devices:

(A) It collects respirable particulates in the same range as the vertical elutriator (approximately 15 microns);

(B) Replicate exposure data used to establish equivalency are collected in side-by-side field and laboratory comparisons; and

(C) A minimum of 100 samples over the range of 0.5 to 2 times the permissible exposure limit are collected, and ninety percent of these samples have an accuracy range of plus or minus twenty-five percent of the vertical elutriator reading with a ninety-five percent confidence level as demonstrated by a statistically valid protocol. (An acceptable protocol for demonstrating equivalency is described in Appendix E of this section.)

(iv) WISHA will issue a written opinion stating that an instrument is equivalent to a vertical elutriator cotton dust sampler if:

(A) A manufacturer or employer requests an opinion in writing and supplies the following information:

(I) Sufficient test data to demonstrate that the instrument meets the requirements specified in this paragraph and the protocol specified in Appendix E of this section;

(II) Any other relevant information about the instrument and its testing requested by WISHA; and

(III) A certification by the manufacturer or employer that the information supplied is accurate; and

(B) If WISHA finds, based on information submitted about the instrument, that the instrument meets the requirements for equivalency specified by this subsection.

(b) Initial monitoring. Each employer who has a place of employment within the scope of subsections (1)(a), (d) or (e) of this section must conduct monitoring by obtaining measurements which are representative of the exposure of all employees to airborne concentrations of lint-free respirable cotton dust over an eight-hour period. The sampling program must include at least one determination during each shift for each work area.

(c) Periodic monitoring.

(i) If the initial monitoring required by (4)(b) of this section or any subsequent monitoring reveals employee exposure to be at or below the permissible exposure limit, the employer shall repeat the monitoring for those employees at least annually.

(ii) If the initial monitoring required by (4)(b) of this section or any subsequent monitoring reveals employee exposure to be above the PEL, the employer shall repeat the monitoring for those employees at least every 6 months.

(iii) Whenever there has been a production, process, or control change which may result in new or additional exposure to cotton dust, or whenever the employer has any other reason to suspect an increase in employee exposure, the employer must repeat the monitoring and measurements for those employees affected by the change or increase.

(d) Employee notification.

(i) Within 15 working days after the receipt of monitoring results, the employer must notify each employee in writing of the exposure measurements which represent that employee's exposure.

(ii) Whenever the results indicate that the employee's exposure exceeds the applicable permissible exposure limit specified in subsection (3) of this section, the employer must include in the written notice a statement that the permissible exposure limit was exceeded and a description of the corrective action taken to reduce exposure below the permissible exposure limit.

(5) **Methods of compliance**.

(a) Engineering and work practice controls. The employer must institute engineering and work practice controls to reduce and maintain employee exposure to cotton dust at or below the permissible exposure limit specified in subsection (3) of this section, except to the extent that the employer can establish that such controls are not feasible.

(b) Whenever feasible engineering and work practice controls are not sufficient to reduce employee exposure to or below the permissible exposure limit, the employer must nonetheless institute these controls to immediately reduce exposure to the lowest feasible level, and must supplement these controls with the use of respirators which must comply with the provisions of subsection (6) of this section.

(c) Compliance program.

(i) Where the most recent exposure monitoring data indicates that any employee is exposed to cotton dust levels greater than the permissible exposure limit, the employer must establish and implement a written program sufficient to reduce exposures to or below the permissible exposure limit solely by means of engineering controls and work practices as required by (a) of this subsection.

(ii) The written program must include at least the following:

(A) A description of each operation or process resulting in employee exposure to cotton dust;

(B) Engineering plans and other studies used to determine the controls for each process;

(C) A report of the technology considered in meeting the permissible exposure limit;

(D) Monitoring data obtained in accordance with subsection (4) of this section;

(E) A detailed schedule for development and implementation of engineering and work practice controls, including exposure levels projected to be achieved by such controls;

(F) Work practice program; and

(G) Other relevant information.

(iii) The employer's schedule as set forth in the compliance program, must project completion of the implementation of the compliance program no later than March 27, 1984 or as soon as possible if monitoring after March 27, 1984 reveals exposures over the PEL, except as provided in subsection (13)(b)(ii)(B) of this section.

(iv) The employer must complete the steps set forth in his program by the dates in the schedule.

(v) Written programs must be submitted, upon request, to the director, and must be available at the worksite for examination and copying by the director, and any affected employee or their designated representatives.

(vi) The written programs required under subsection (5)(c) of this section must be revised and updated at least every six months to reflect the current status of the program and current exposure levels.

(d) Mechanical ventilation. When mechanical ventilation is used to control exposure, measurements which demonstrate the effectiveness of the system to control exposure, such as capture velocity, duct velocity, or static pressure must be made at reasonable intervals.

(6) **Use of respirators**.

(a) General. For employees who use respirators required by this section, the employer must provide each employee an appropriate respirator that complies with the requirements of this section. Respirators must be used during:

(i) Periods necessary to install or implement feasible engineering controls and work-practice controls;

(ii) Maintenance and repair activities for which engineering and work-practice controls are not feasible;

(iii) Work operations for which feasible engineering and work-practice controls are not yet sufficient to reduce employee exposure to or below the permissible exposure limits;

(iv) Work operations specified under subsection (7)(a) of this section;

(v) Periods for which an employee requests a respirator.

(b) Respirator program.

(i) The employer must develop, implement and maintain a respiratory protection program as required by chapter 296-842 WAC, Respirators, which covers each employee required by this chapter to use a respirator.

(ii) Whenever a physician determines that an employee who works in an area in which the cotton-dust concentration exceeds the PEL is unable to use a respirator, including a powered air-purifying respirator, the employee must be given the opportunity to transfer to an available position, or to a position that becomes available later, that has a cotton-dust concentration at or below the PEL. The employer must ensure that such employees retain their current wage rate or other benefits as a result of the transfer.

(c) Respirator selection. The employer must:

(i) Select and provide to employees the appropriate respirators by following requirements in this section and WAC 296-842-13005 found in the respirator rule.

(ii) Provide employees with a powered air-purifying respirator (PAPR) when the employee chooses to use a PAPR instead of a negative-pressure air-purifying respirator, and the PARP will provide adequate protection.

(iii) Limit the use of filtering facepiece respirators for protection against cotton dust to concentrations less than or equal to 5 times (5x) the PEL.

(iv) Provide high-efficiency particulate air (HEPA) filters or N-, R-, or P-100 series filters for powered air-purifying respirators (PAPRs) and negative-pressure air-purifying respirators when used in cotton dust concentrations greater than 10 times (10x) the PEL.

(7) **Work practices.** Each employer must, regardless of the level of employee exposure, immediately establish and implement a written program of work practices which must minimize cotton dust exposure. The following must be included where applicable:

(a) Compressed air "blow down" cleaning shall be prohibited, where alternative means are feasible. Where compressed air is used for cleaning, the employees performing the "blow down" or "blow off" must wear suitable respirators. Employees whose presence is not required to perform "blow down" or "blow off" must leave the area affected by the "blow down" or "blow off" during this cleaning operation.

(b) Cleaning of clothing or floors with compressed air must be prohibited.

(c) Floor sweeping must be performed with a vacuum or with methods designed to minimize dispersal of dust.

(d) In areas where employees are exposed to concentrations of cotton dust greater than the permissible exposure limit, cotton and cotton waste must be stacked, sorted, baled, dumped, removed or otherwise handled by mechanical means, except where the employer can show that it is infeasible to do so. Where infeasible, the method used for handling cotton and cotton waste must be the method which reduces exposure to the lowest level feasible.

(8) **Medical surveillance**.

(a) General.

(i) Each employer covered by the standard must institute a program of medical surveillance for all employees exposed to cotton dust.

(ii) The employer must ensure that all medical examinations and procedures are performed by or under the supervision of a licensed physician and are provided without cost to the employee.

(iii) Persons other than licensed physicians, who administer the pulmonary function testing required by this section must have completed a NIOSH approved training course in spirometry.

(b) Initial examinations. The employer must provide medical surveillance to each employee who is or may be exposed to cotton dust. For new employees' this examination must be provided prior to initial assignment. The medical surveillance must include at least the following:

(i) A medical history;

(ii) The standardized questionnaire contained in WAC 296-62-14537; and

(iii) A pulmonary function measurement, including a determination of forced vital capacity (FVC) and forced expiratory volume in one second (FEV_1), the FEV_1/FVC ratio, and the percentage that the measured values of FEV_1 and FVC differ from the predicted values, using the standard tables in WAC 296-62-14539. These determinations must be made for each employee before the employee enters the workplace on the first day of the work week, preceded by at least thirty-five hours of no exposure to cotton dust. The tests must be repeated during the shift, no less than four hours and no more than ten hours after the beginning of the work shift; and, in any event, no more than one hour after cessation of exposure. Such exposure must be typical of the employee's usual workplace exposure. The predicted FEV_1 and FVC for blacks must be multiplied by 0.85 to adjust for ethnic differences.

(iv) Based upon the questionnaire results, each employee must be graded according to Schilling's byssinosis classification system.

(c) Periodic examinations.

(i) The employer must provide at least annual medical surveillance for all employees exposed to cotton dust above the action level in yarn manufacturing, slashing and weaving, cotton washing and waste house operations. The employer must provide medical surveillance at least every two years for all employees exposed to cotton dust at or below the action level, for all employees exposed to cotton dust from washed cotton (except from washed cotton defined in subsection (9)(c) of this section), and for all employees exposed to cotton dust in cottonseed processing and waste processing operations. Periodic medical surveillance must include at least an update of the medical history, standardized questionnaire (Appendix B-111), Schilling byssinosis grade, and the pulmonary function measurements in (b)(iii) of this subsection.

(ii) Medical surveillance as required in (c)(i) of this subsection must be provided every six months for all employees in the following categories:

(A) An FEV1 of greater than eighty percent of the predicted value, but with an FEV1 decrement of five percent or 200 ml. on a first working day;

(B) An FEV1 of less than eighty percent of the predicted value; or

(C) Where, in the opinion of the physician, any significant change in questionnaire findings, pulmonary function results, or other diagnostic tests have occurred.

(iii) An employee whose FEV_1 is less than sixty percent of the predicted value must be referred to a physician for a detailed pulmonary examination.

(iv) A comparison must be made between the current examination results and those of previous examinations and a determination made by the physician as to whether there has been a significant change.

(d) Information provided to the physician. The employer must provide the following information to the examining physician:

(i) A copy of this regulation and its appendices;

(ii) A description of the affected employee's duties as they relate to the employee's exposure;

(iii) The employee's exposure level or anticipated exposure level;

(iv) A description of any personal protective equipment used or to be used; and

(v) Information from previous medical examinations of the affected employee which is not readily available to the examining physician.

(e) Physician's written opinion.

(i) The employer must obtain and furnish the employee with a copy of a written opinion from the examining physician containing the following:

(A) The results of the medical examination and tests including the FEV1, FVC, and FEV1/FVC ratio;

(B) The physician's opinion as to whether the employee has any detected medical conditions which would place the employee at increased risk of material impairment of the employee's health from exposure to cotton dust;

(C) The physician's recommended limitations upon the employee's exposure to cotton dust or upon the employee's use of respirators including a determination of whether an employee can wear a negative pressure respirator, and where the employee cannot, a determination of the employee's ability to wear a powered air purifying respirator; and

(D) A statement that the employee has been informed by the physician of the results of the medical examination and any medical conditions which require further examination or treatment.

(ii) The written opinion obtained by the employer must not reveal specific findings or diagnoses unrelated to occupational exposure.

(9) **Employee education and training**.

(a) Training program.

(i) The employer must train each employee exposed to cotton dust in accordance with the requirements of this section and must ensure that each employee is informed of the following:

(A) The acute and long term health hazards associated with exposure to cotton dust;

(B) The names and descriptions of jobs and processes which could result in exposure to cotton dust at or above the PEL.

(C) The measures, including work practices required by subsection (7) of this section, necessary to protect the employee from exposures in excess of the permissible exposure limit;

(D) The purpose, proper use, limitations, and other training requirements for respiratory protection as required by subsection (6) of this section and chapter 296-842 WAC (see WAC 296-842-11005, 296-842-16005 and 296-842-19005);

(E) The purpose for and a description of the medical surveillance program required by subsection (8) of this section and other information which will aid exposed employees in understanding the hazards of cotton dust exposure; and

(F) The contents of this standard and its appendices.

(ii) The training program must be provided prior to initial assignment and must be repeated annually for each employee exposed to cotton dust, when job assignments or work processes change and when employee performance indicates a need for retraining.

(b) Access to training materials.

(i) Each employer must post a copy of this section with its appendices in a public location at the workplace, and must, upon request, make copies available to employees.

(ii) The employer must provide all materials relating to the employee training and information program to the director upon request.

(10) **Signs**.

The employer must post the following warning sign in each work area where the permissible exposure limit for cotton dust is exceeded:

DANGER
COTTON DUST
CAUSES DAMAGE TO LUNGS
(BYSSINOSIS)
WEAR RESPIRATORY PROTECTION IN THIS AREA

(11) **Recordkeeping**.

(a) Exposure measurements.

(i) The employer must establish and maintain an accurate record of all measurements required by subsection (4) of this section.

(ii) The record must include:

(A) A log containing the items listed in WAC 296-62-14535 (4)(a), and the dates, number, duration, and results of each of the samples taken, including a description of the procedure used to determine representative employee exposures;

(B) The type of protective devices worn, if any, and length of time worn; and

(C) The names, social security number, job classifications, and exposure levels of employees whose exposure the measurement is intended to represent.

(iii) The employer must maintain this record for at least twenty years.

(b) Medical surveillance.

(i) The employer must establish and maintain an accurate medical record for each employee subject to medical surveillance required by subsection (8) of this section.

(ii) The record must include:

(A) The name and social security number and description of the duties of the employee;

(B) A copy of the medical examination results including the medical history, questionnaire response, results of all tests, and the physician's recommendation;

(C) A copy of the physician's written opinion;

(D) Any employee medical complaints related to exposure to cotton dust;

(E) A copy of this standard and its appendices, except that the employer may keep one copy of the standard and the appendices for all employees, provided that he references the standard and appendices in the medical surveillance record of each employee; and

(F) A copy of the information provided to the physician as required by subsection (8)(d) of this section.

(iii) The employer must maintain this record for at least twenty years.

(c) Availability.

(i) The employer must make all records required to be maintained by subsection (11) of this section available to the director for examination and copying.

(ii) Employee exposure measurement records and employee medical records required by this subsection must be provided upon request to employees, designated representatives, and the assistant director in accordance with chapter 296-802 WAC.

(d) Transfer of records.

(i) Whenever the employer ceases to do business, the successor employer must receive and retain all records required to be maintained by subsection (11) of this section.

(ii) The employer must also comply with any additional requirements involving transfer of records set forth in WAC 296-802-60005.

(12) **Observation of monitoring**.

(a) The employer must provide affected employees or their designated representatives an opportunity to observe any measuring or monitoring of employee exposure to cotton dust conducted pursuant to subsection (4) of this section.

(b) Whenever observation of the measuring or monitoring of employee exposure to cotton dust requires entry into an area where the use of personal protective equipment is required, the employer must provide the observer with and assure the use of such equipment and must require the observer to comply with all other applicable safety and health procedures.

(c) Without interfering with the measurement, observers must be entitled to:

(i) An explanation of the measurement procedures;

(ii) An opportunity to observe all steps related to the measurement of airborne concentrations of cotton dust performed at the place of exposure; and

(iii) An opportunity to record the results obtained.

(13) **Washed cotton**.

(a) Exemptions. Cotton, after it has been washed by the processes described in this section is exempt from all or parts of this section as specified if the requirements of this section are met.

(b) Initial requirements.

(i) In order for an employer to qualify as exempt or partially exempt from this standard for operations using washed cotton, the employer must demonstrate that the cotton was washed in a facility which is open to inspection by the director and the employer must provide sufficient accurate documentary evidence to demonstrate that the washing methods utilized meet the requirements of this section.

(ii) An employer who handles or processes cotton which has been washed in a facility not under the employer's control and claims an exemption or partial exemption under this paragraph, must obtain from the cotton washer and make available at the worksite, to the director, or their designated representative, to any affected employee, or to their designated representative the following:

(A) A certification by the washer of the cotton of the grade of cotton, the type of washing process, and that the batch meets the requirements of this section;

(B) Sufficient accurate documentation by the washer of the cotton grades and washing process; and

(C) An authorization by the washer that the director may inspect the washer's washing facilities and documentation of the process.

(c) Medical and dyed cotton. Medical grade (USP) cotton, cotton that has been scoured, bleached and dyed, and mercerized yarn must be exempt from all provisions of this standard.

(d) Higher grade washed cotton. The handling or processing of cotton classed as “low middling light spotted or better” (color grade 52 or better and leaf grade code 5 or better according to the 1993 USDA classification system) must be exempt from all provisions of the standard except requirements of subsection (8) of this section, medical surveillance; subsection (11)(b) through (d) of this section, recordkeeping-medical records, and Appendices B, C, and D of this section, if they have been washed on one of the following systems:

(i) On a continuous batt system or a rayon rinse system including the following conditions:

(A) With water;

(B) At a temperature of no less than 60°C;

(C) With a water-to-fiber ratio of no less than 40:1; and

(D) With the bacterial levels in the wash water controlled to limit bacterial contamination of the cotton.

(ii) On a batch kier washing system including the following conditions:

(A) With water;

(B) With cotton fiber mechanically opened and thoroughly prewetted before forming the cake;

(C) For low-temperature processing, at a temperature of no less than 60°C with a water-to-fiber ratio of no less than 40:1; or, for high-temperature processing, at a temperature of no less than 93°C with a water-to-fiber ratio of no less than 15:1;

(D) With a minimum of one wash cycle followed by two rinse cycles for each batch, using fresh water in each cycle; and

(E) With bacterial levels in the wash water controlled to limit bacterial contamination of the cotton.

(e) Lower grade washed cotton. The handling and processing of cotton of grades lower than "low middling light spotted," that has been washed as specified in (d) of this subsection and has also been bleached, must be exempt from all provisions of the standard except the requirements of subsection (3)(a) of this section, Permissible exposure limits, subsection (4) of this section, Exposure monitoring and measurement, subsection (8) of this section, Medical surveillance, subsection (11) of this section, Recordkeeping, and Appendices B, C and D of this section.

(f) Mixed grades of washed cotton. If more than one grade of washed cotton is being handled or processed together, the requirements of the grade with the most stringent exposure limit, medical and monitoring requirements must be followed.

(14) **Appendices**.

(a) Appendix B (B-I, B-II and B-III), WAC 296-62-14537, Appendix C, WAC 296-62-14539 and Appendix D, WAC 296-62-14541 are incorporated as part of this chapter and the contents of these appendices are mandatory.

(b) Appendix A of this chapter, WAC 296-62-14535 contains information which is not intended to create any additional obligations not otherwise imposed or to detract from any existing obligations.

(c) Appendix E of this chapter is a protocol which may be followed in the validation of alternative measuring devices as equivalent to the vertical elutriator cotton dust sampler. Other protocols may be used if it is demonstrated that they are statistically valid, meet the requirements in subsection (4)(a)(iii) of this section, and are appropriate for demonstrating equivalency.

WAC 296-62-14535 Appendix A--Air sampling and analytical procedures for determining concentrations of cotton dust.

(1) **Sampling locations.** The sampling procedures must be designed so that samples of the actual dust concentrations are collected accurately and consistently and reflect the concentrations of dust at the place and time of sampling. Sufficient number of six-hour area samples in each distinct work area of the plant should be collected at locations which provide representative samples of air to which the worker is exposed. In order to avoid filter overloading, sampling time may be shortened when sampling in dusty areas. Samples in each work area should be gathered simultaneously or sequentially during a normal operating period. The daily time-weighted average (TWA) exposure of each worker can then be determined by using the following formula:

$$\frac{\text{Summation of hours spent in each location and the dust concentration in that location.}}{\text{Total hours exposed}}$$

A time-weighted average concentration should be computed for each worker and properly logged and maintained on file for review.

(2) **Sampling equipment**.

(a) Sampler. The instrument selected for monitoring is the Lumsden-Lynch vertical elutriator. It should operate at a flow rate of 7.4 ±0.2 liters/minute. The samplers should be cleaned prior to sampling. The pumps should be monitored during sampling.

(b) Filter holder. A three-piece cassette constructed of polystyrene designed to hold a 37-mm diameter filter should be used. Care must be exercised to insure that an adequate seal exists between elements of the cassette.

(c) Filters and support pads. The membrane filters used should be polyvinyl chloride with a 5-um pore size and 37-mm diameter. A support pad, commonly called a backup pad, should be used under the filter membrane in the field monitor cassette.

(d) Balance. A balance sensitive to 10 micrograms should be used.

(3) **Instrument calibration procedure.** Samplers must be calibrated when first received from the factory, after repair, and after receiving any abuse. The samplers should be calibrated in the laboratory both before they are used in the field and after they have been used to collect a large number of field samples. The primary standard, such as a spirometer or other standard calibrating instruments such as a wet test meter or a large bubble meter or dry gas meter, should be used. Instructions for calibration with the wet test meter follow. If another calibration device is selected, equivalent procedures should be used:

(a) Level wet test meter. Check the water level which should just touch the calibration point at the left side of the meter. If water level is low, add water 1-2° F. warmer than room temperature of till point. Run the meter for thirty minutes before calibration;

(b) Place the polyvinyl chloride membrane filter in the filter cassette;

(c) Assemble the calibration sampling train;

(d) Connect the wet test meter to the train.

The pointer on the meter should run clockwise and a pressure drop of not more than 1.0 inch of water indicated. If the pressure drop is greater than 1.0, disconnect and check the system;

(e) Operate the system for ten minutes before starting the calibration;

(f) Check the vacuum gauge on the pump to insure that the pressure drop across the orifice exceeds seventeen inches of mercury;

(g) Record the following on calibration data sheets:

(i) Wet test meter reading, start and finish;

(ii) Elapsed time, start and finish (at least two minutes);

(iii) Pressure drop at manometer;

(iv) Air temperature;

(v) Barometric pressure; and

(vi) Limiting orifice number.

(h) Calculate the flow rate and compare against the flow of 7.4 ±0.2 liters/minute. If flow is between these limits, perform calibration again, average results, and record orifice number and flow rate. If flow is not within these limits, discard or modify orifice and repeat procedure;

(i) Record the name of the person performing the calibration, the date, serial number of the wet test meter, and the number of the critical orifices being calibrated.

(4) **Sampling procedure**.

(a) Sampling data sheets should include a log of:

(i) The date of the sample collection;

(ii) The time of sampling;

(iii) The location of the sampler;

(iv) The sampler serial number;

(v) The cassette number;

(vi) The time of starting and stopping the sampling and the duration of sampling;

(vii) The weight of the filter before and after sampling;

(viii) The weight of dust collected (corrected for controls);

(ix) The dust concentration measured;

(x) Other pertinent information; and

(xi) Name of person taking sample.

(b) Assembly of filter cassette should be as follows:

(i) Loosely assemble three-piece cassette;

(ii) Number cassette;

(iii) Place absorbent pad in cassette;

(iv) Weigh filter to an accuracy of 10 μg;

(v) Place filter in cassette;

(vi) Record weight of filter in log, using cassette number for identification;

(vii) Fully assemble cassette, using pressure to force parts tightly together;

(viii) Install plugs top and bottom;

(ix) Put shrink band on cassette, covering joint between center and bottom parts of cassette; and

(x) Set cassette aside until shrink band dries thoroughly.

(c) Sampling collection should be performed as follows:

(i) Clean lint out of the motor and elutriator;

(ii) Install vertical elutriator in sampling locations specified above with inlet 4-1/2 to 5-1/2 feet from floor (breathing zone height);

(iii) Remove top section of cassette;

(iv) Install cassette in ferrule of elutriator;

(v) Tape cassette to ferrule with masking tape or similar material for air-tight seal;

(vi) Remove bottom plug of cassette and attach hose containing critical orifice;

(vii) Start elutriator pump and check to see if gauge reads above 17 in. of Hg vacuum;

(viii) Record starting time, cassette number, and sampler number;

(ix) At end of sampling period stop pump and record time; and

(x) Controls with each batch of samples collected, two additional filter cassettes should be subjected to exactly the same handling as the samples, except that they are not opened. These control filters should be weighed in the same manner as the sample filters.

Any difference in weight in the control filters would indicate that the procedure for handling sample filters may not be adequate and should be evaluated to ascertain the cause of the difference, whether and what necessary corrections must be made, and whether additional samples must be collected.

(d) Shipping. The cassette with samples should be collected, along with the appropriate number of blanks, and shipped to the analytical laboratory in a suitable container to prevent damage in transit.

(e) Weighing of the sample should be achieved as follows:

(i) Remove shrink band;

(ii) Remove top and middle sections of cassette and bottom plug;

(iii) Remove filter from cassette and weigh to an accuracy of 10 μg; and

(iv) Record weight in log against original weight.

(f) Calculation of volume of air sampled should be determined as follows:

(i) From starting and stopping times of sampling period, determine length of time in minutes of sampling period; and

(ii) Multiply sampling time in minutes by flow rate of critical orifice in liters per minute and divide by 1000 to find air quantity in cubic meters.

(g) Calculation of dust concentrations should be made as follows:

(i) Subtract weight of clean filter from dirty filter and apply control correction to find actual weight of sample. Record this weight (in μg) in log; and

(ii) Divide mass of sample in μg by air volume in cubic meters to find dust concentration in μg/m. Record in log.

WAC 296-62-14537 Appendix B-I through B-III--Respiratory questionnaire.

APPENDIX B-I
Respiratory Questionnaire

A. IDENTIFICATION DATA

Plant_____ **Social Security No.**_____

Day **Month** **Year**
(figures) **(last 2 digits)**

Name_____ **Date of Interview**_____
(Surname)

_____ **Date of Birth**_____
(First Names)

Address_____ **Age**_____**(8, 9)** **Sex**_____ **M** **F**
(10)

_____ **Race**

W	N	IND.	OTHER

(11)

Interviewer: 1 2 3 4 5 6 7 8 (12)

Work Shift: 1st_____**2nd**_____**3rd**_____**(13)** **Standing Height**_____ **(14, 15)**

Present Work Area **Weight**_____ **(16, 18)**

If working in more than one specified work area, x area where most of the work shift is spent. If "other," but spending 25% of the work shift in one of the specified work areas, classify in that work area. If carding department employee, check area within that department where most of the work shift is being spent (if in doubt, check "throughout"). For work areas such as spinning and weaving where many work rooms may be involved, be sure to sure to check the specific work room to which the employee is assigned – if he works in more than one work room within a department classify as 7 (all) for that department.

	Workroom Number	(19) Open	(20) Pick	Area	(21) Card #1	(22) #2	(23) Spin	(24) Wind	(25) Twist	(26) Spool	(27) Warp	(28) Slash	(29) Weave	(30) Other
At Risk (cotton & cotton blend)	1			Cards										
	2			Draw										
	3			Comb										
	4			Rove										
	5			Thru Out										
	6													
	7 (all)													
Control (synthetic & Wool Ex-worker (cotton)	8													
	9													

Use actual wording of each question. Put X in appropriate square after each question. When in doubt record 'No'.

When no square, circle appropriate answer.

B. COUGH

(on getting up) ↑

Do you usually cough first thing in the morning?_____Yes_____ No_____ (31)
(Count a cough with first smoke or on "first going out of doors." exclude clearing throat or a single cough.)

Do you usually cough during the day or at night?_____Yes_____ No_____ (32)
(Ignore an occasional cough.)

If 'Yes' to either question (31, 32):

Do you cough like this on most days for as much as three months a year?_____Yes_____ No_____ (33)
Do you cough on any particular day of the week?_____Yes_____ No_____ (34)

	(1)	(2)	(3)	(4)	(5)	(6)	(7)
If 'Yes': Which day?	**Mon.**	**Tues.**	**Wed.**	**Thur.**	**Fri.**	**Sat.**	**Sun.**

_____ (35)

C. PHLEGM or alternative word to suit local custom.

(on getting up) ↑

Do you usually bring up any phlegm from your chest first thing in the morning? (Count phlegm with the first smoke or on "first going out of doors." Exclude phlegm from the nose. Count swallowed phlegm.)_____Yes_____ No_____(36)

Do you usually bring up any phlegm from your chest during the day or at night? (Accept twice or more.)_____Yes_____ No_____(37)

If 'Yes' to either question (36) or (37):

Do you bring up phlegm like this on most days for as much as three months each year?_____Yes_____ No_____(38)

If 'Yes' to question (33) or (38):

(cough)

How long have you had this phlegm?

(Write in number of years)

- **(1) ☐ 2 years or less**
- **(2) ☐ More than 2 years – 9 years (39)**
- **(3) ☐ 10 – 19 years**
- **(4) ☐ 20+ years**

↑These words are for subjects who work at night.

D. CHEST ILLNESSES

In the past three years, have you had a period of (increased) ↑ cough and phlegm lasting for 3 weeks or more?_____

- **(1) ☐ No (40)**
- **(2) ☐ Yes, only one period**
- **(3) ☐ Yes, two or more periods**

↑For subjects who usually have phlegm

During the past three years have you had any chest illness which has kept you off work, indoors at home or in bed? (For as long as one week, flu?) Yes_____ No_____(41)

If 'Yes' to (41): Did you bring up (more) phlegm than usual in any of these illnesses? Yes_____ No_____(42)

If "Yes' to (42): During the past three years have you had:

- **Only one such illness with increased phlegm? (1) ☐ (43)**
- **More than one illness: (2) ☐ (44)**

Br. Grade_____

E. TIGHTNESS

Does your chest ever feel tight or your breathing become difficult?_____ Yes_____ No_____(45)
Is your chest tight or your breathing difficult on any particular day of the week? (After a week or 10 days away from the mill)_____ Yes_____ No_____(46)

If 'Yes' Which day? Mon. (3) Tues. (4) Wed. (5) Thur. (6) Fri. (7) Sat. (8) Sun.

(1) Sometimes (2) Always

If 'Yes' Monday, At what time on Monday does your chest feel tight or your breathing difficult?
1. ☐ Before entering the mill (48)
2. ☐ After entering the mill

(Ask only if No to Question (45))
In the past, has your chest ever been tight or your breathing difficult on any particular day of the week?_____ Yes_____ No_____(49)

If 'Yes' Which day? Mon. (3) Tues. (4) Wed. (5) Thur. (6) Fri. (7) Sat. (8) Sun.

(1) Sometimes (2) Always

F. BREATHLESSNESS

If disabled from walking by any condition other than heart or lung disease put "X" here and leave questions (52-60) unasked ☐ (51)

Are you ever troubled by shortness of breath, when hurrying on the level or walking up a slight hill?_____ Yes_____ No_____ (52)
If 'No', grade is 1. If 'Yes', proceed to next question.
Do you get short of breath walking with other people at an ordinary pace on the level?_____ Yes_____ No_____ (53)
If 'No', grade is 2. If 'Yes', proceed to next question.
Do you have to stop for breath when walking at your own pace on the level?_____ Yes_____ No_____ (54)
If 'No', grade is 3. If 'Yes', proceed to next question.
Do you have to stop for breath on washing or dressing?_____ Yes_____ No_____ (55)
If 'No', grade is 4. If 'Yes', grade is 5.
Dyspnea Grd._____ (56)

ON MONDAYS

Are you ever troubled by shortness of breath, when hurrying on the level or walking up a slight hill?_____ Yes_____ No_____ (57)
If 'No', grade is 1. If 'Yes', proceed to the next question.
Do you get short of breath walking with other people at an ordinary pace on the level?_____ Yes_____ No_____ (58)
If "No', grade is 2. If 'Yes', proceed to the next question.
Do you have to stop for breath when walking at your own pace on the level?_____ Yes_____ No_____ (59)
If 'No', grade is 3. If 'Yes', proceed to the next question.
Are you short of breath on washing or dressing?_____ Yes_____ No_____ (60)
If "No', grade is 4. If 'Yes', grade is 5.
B. Grd_____ (61)

G. OTHER ILLNESSES AND ALLERGY HISTORY

Do you have a heart condition for which you are under a doctor's care?_____ Yes_____ No_____ (62)

Have you ever had asthma? Yes_____ No_____ (63)

If 'Yes', did it begin (1) ☐ Before age 30 (2) ☐ After age 30

'Yes' before 30, did you have asthma before ever going to work in a textile mill?_____ Yes_____ No_____ (64)

Have you ever had hay fever or other allergies (other than above)?_____ Yes_____ No_____ (65)

H. TOBACCO SMOKING*

Do you smoke?
Record 'Yes' if regular smoker up to one month ago
(Cigarettes, cigar or pipe)_____ Yes_____ No_____ (66)

If 'No' to 63

Have you ever smoked? (Cigarettes, cigars, pipe. Record 'No' if subject has never smoked as much as one cigarette a day, or 1 oz. tobacco a month, for as long as one year.)_____ Yes_____ No_____ (67)

If 'Yes' to (63) or (64), what have you smoked and for how many years?
(Write in specific number of years in the appropriate square.)

	(1)	(2)	(3)	(4)	(5)	(6)	(7)	(8)	(9)	
Years	(<5)	(5 – 9)	(10 – 14)	(15 – 19)	(20 – 24)	(25 – 29)	(30 – 34)	(35 – 39)	(>40)	
Cigarettes										(68)
Pipe										(69)
Cigars										(70)

If cigarettes, how many packs per day? (1) ☐ less than 1/2 pack (2) ☐ 1/2 pack, but less than 1 pack (71)

(Write in number of cigarettes) (3) ☐ 1 pack, but less than 1-1/2 packs (4) ☐ 1-1/2 packs or more

Number of pack years: _____ (72) (73)

If an ex-smoker (cigarettes, cigar or pipe). How long since you stopped_____ (74)

(Write in number of years) (1) ☐ 0-1 year (2) ☐ 1-4 years

(3) ☐ 5-9 years (4) ☐ 10+ years

Have you changed your smoking habits since last interview? If yes, specify what changes.

I. OCCUPATIONAL HISTORY**

Have you ever worked in A foundry? (As long as one year)_____ Yes_____ No_____ (75)

Stone or mineral mining, quarrying or processing
(As long as one year)_____ Yes_____ No_____ (76)

Asbestos milling or processing? (Ever)_____ Yes_____ No_____ (77)

Other dusts, fumes or smoke? If yes, specify_____ Yes_____ No_____ (78)

Type of exposure_____

Length of exposure_____

**Ask only on first interview.

At what age do you first go to work in a textile mill? (Write in specific age in appropriate square)

<20	20-24	25-29	30-34	35-39	40+

When you first worked in a textile mill, did you work with (1) ☐ Cotton or cotton blend (79)

(2) ☐ Synthetic or wool (80)

APPENDIX B-II

Respiratory Questionnaire for Non Textile Workers for the Cotton Industry

Identification No. **Interviewer Code**

Location **Date of Interview**

A. IDENTIFICATION

1. Name (Last) (First) (Middle Initial)	3. Phone Number Area Code ( ) No.	4. Social Security # (optional, see below) _____ - _____ - _____
2. Current Address (Number, Street, or Rural Route, City or Town, County, State, Zip Code)	5. Birthday (Mo., Day, Yr.)	6. Age Last Birthday
	7 Sex 1 ☐ Male 2 ☐ Female	
	8. Ethnic Group or Ancestry 1 ☐ White, not of Hispanic Origin 2 ☐ Black, not of Hispanic Origin 3 ☐ Hispanic 4 ☐ American Indian or Alaskan Native 5 ☐ Asian or Pacific Islander 6 ☐ Other:_____	

9. Standing Height	10. Weight	11. Work Shift
_____(cm)	_____	1st ☐ 2nd ☐ 3rd ☐

12. Present Work Area
Please indicate primary assigned work area and percent of time spent at that site. If at other locations, please indicate and note percent of time for each.

Primary Work Area	_____
Specific Job	_____

13. Appropriate Industry

1 ☐ Garnetting 3 ☐ Cotton Warehouse 5 ☐ Cotton Classification

2 ☐ Cottonseed Oil Mill 4 ☐ Utilization 6 ☐ Cotton Ginning

(Furnishing your Social Security number is voluntary. Your refusal to provide this number will not affect any right, benefit, or privilege to which you would be entitled if you did provide your Social Security number. Your Social Security number is being requested since it will permit use in future determinators in statistical research studies.)

B. OCCUPATIONAL HISTORY TABLE

Complete the following table showing the entire work history of the individual from present to initial employment. Sporadic, part-time periods of employment, each of no significant duration, should be grouped if possible.

Industry and Location	Tenure of Employment		Specific Occupation	Average No. Days Worked Per Week	Hazardous Health Exposure Associated With Work		
	From 19___	To 19___			Yes	No	If Yes, Describe

C. SYMPTOMS

Use actual wording of each question. Put X in appropriate square after each question. When in doubt record 'No'.

COUGH

1. Do you usually cough first thing in the morning?
(on getting up)* 1 ☐ Yes 2 ☐ No
(Count a cough with first smoke or on "first going out of doors". Exclude clearing throat or a single cough.)

2. Do you usually cough during the day or at night?
(Ignore an occasional cough.) 1 ☐ Yes 2 ☐ No

If YES to either question 1 or 2:

3. Do you cough like this on most days for as much as three months a year? 1 ☐ Yes 2 ☐ No 3 ☐ N/A

4. Do you cough on any particular day of the week? 1 ☐ Yes 2 ☐ No

If YES:

5. Which day? Mon. Tue. Wed. Thur. Fri. Sat. Sun.

_____

PHLEGM

6. Do you usually bring up phlegm from your chest first thing in the morning? (on getting up)* (Count phlegm with the first smoke or on "first going out of doors." Exclude phlegm from the nose. Count swallowed phlegm.) 1 ☐ Yes 2 ☐ No

7. Do you usually bring up phlegm from your chest during the day or at night?
(Accept twice or more) 1 ☐ Yes 2 ☐ No

If YES to either question 6 or 7:

8. Do you bring up phlegm like this on most days for as much as three months each year. 1 ☐ Yes 2 ☐ No

If YES to question 3 or 8:

9. How long have you had this phlegm? (cough)
Write in number of years)

(1) ☐ 2 years or less
(2) ☐ More than 2 years – 9 years
(3) ☐ 10-19 years
(4) ☐ 20+ years

***These words are for subjects who work at night**

10. In the past three years, have you had a period of (increased) cough and phlegm lasting for 3 weeks or more?

(1) ☐ No
(2) ☐ Yes, only one period
(3) ☐ Yes, two or more periods

For subjects who usually have phlegm:

11. During the past 3 years have you had any chest illness which has kept you off work, indoors at home in bed? (For as long as one week, flu?)

1 ☐ Yes 2 ☐ No

If YES to 11:

12. Did you bring up (more) phlegm than usual in any of these illnesses?

1 ☐ Yes 2 ☐ No

If YES to 12: During the past three years have you had:

13. Only one such illness with increased phlegm?

1 ☐ Yes 2 ☐ No

14. More than one such illness:

1 ☐ Yes 2 ☐ No
Br. Grade_____

TIGHTNESS

15. Does your chest ever feel tight or your breathing become difficult?

1 ☐ Yes 2 ☐ No

16. Is your chest tight or your breathing difficult on any particular day of the week? (after a week or 10 days from the pill)

If 'Yes' Which day?	Mon.	(3) Tues.	(4) Wed.	(5) Thur.	(6) Fri.	(7) Sat.	(8) Sun.

(1) Sometimes (2) Always

18. If YES Monday: At what time on Monday doe your chest feel tight or your breathing difficult?

☐ Before entering mill
☐ After entering mill

(ASK ONLY IF NOT TO QUESTION 15)

19. In the past, has your chest ever been tight or your breathing difficult on any particular day of the week?

1 ☐ Yes 2 ☐ No

If 'Yes' Which day?	Mon.	(3) Tues.	(4) Wed.	(5) Thur.	(6) Fri.	(7) Sat.	(8) Sun.

(1) Sometimes (2) Always

21. If disabled from walking by any condition other than heart or lung disease put "X" in the space and leave questions (20-30) unasked. ☐

22. Are you ever troubled by shortness of breath, when hurrying on the level or walking up slight hill? 1 ☐ Yes 2 ☐ No

If NO, grade is 1. If YES, proceed to next question.

23. Do you get short of breath walking with other people at an ordinary pace on the level? 1 ☐ Yes 2. ☐ No

If NO, grade is 2. If YES, proceed to next question.

24. Do you have to stop for breath when walking at your own pace on the level? 1. ☐ Yes 2. ☐ No

If NO, grade is 3. If YES, proceed to next question.

25. Are you short of breath on washing or dressing? 1. ☐ Yes 2. ☐ No

If NO, grade is 4. If YES, grade is 5.

26. Dyspnea Grd._____

ON MONDAYS

27. Are you ever troubled by shortness of breath, when hurrying on the level or walking up a slight hill? 1. ☐ Yes 2. ☐ No

If NO, grade is 1. If YES, proceed to next question.

28. Do you get short of breath walking with other people at an ordinary pace on the level? 1. ☐ Yes 2. ☐ No

If NO, grade is 2. If YES, proceed to next question.

29. Do you have to stop for breath when walking at your own pace on the level? 1. ☐ Yes 2. ☐ No

If NO, grade is 3. If YES, proceed to next question.

30. Are you short of breath on washing or dressing? 1. ☐ Yes 2. ☐ No

If NO, grade is 4. If YES, grade is 5.

31. B. Grd._____

OTHER ILLNESSES AND ALLERGY HISTORY

32. Do you have a heart condition for which you are under a doctor's care? 1. ☐ Yes 2. ☐ No

33. Have you ever had asthma? 1. ☐ Yes 2. ☐ No

If yes, did it begin: (1) Before age 30 ☐
(2) After age 30 ☐

34. If yes before 30: did you have asthma before ever going to work in a textile mill? 1. ☐ Yes 2. ☐ No

35. Have you ever had hay fever or other allergies (other than above)? 1. ☐ Yes 2. ☐ No

36. Do you smoke: 1. ☐ Yes 2. ☐ No
Record Yes if regular smoker up to one month ago. (Cigarettes, cigar or pipe).

If NO to (33).

37. Have you ever smoked? (Cigarettes, cigars, pipe. Record NO if subject has never smoked as much as one cigarette a day, or 1 oz. of tobacco a month, for as long as one year.) 1. ☐ Yes 2. ☐ No

If Yes to (33) or (34): what have you smoked for how many years?
(Write in specific number of years in the appropriate square)

	(1)	(2)	(3)	(4)	(5)	(6)	(7)	(8)	(9)
Years	(<5)	(5 – 9)	(10 – 14)	(15 – 19)	(20 – 24)	(25 – 29)	(30 – 34)	(35 – 39)	(>40)
38. Cigarettes									
39. Pipe									
40. Cigars									

41. If cigarettes, how many packs per day?

(Write in number of cigarettes)

_____

☐ less than 1/2 pack
☐ 1/2 pack, but less than 1 pack (3)
☐ 1 pack, but less than 1-1/2 packs
☐ 1-1/2 packs or more

42. Number of pack years: _____

43. If an ex-smoker (cigarettes, cigar or pipe), how long since you stopped? Write in number of years.)

_____

☐ 0-1 year ☐ 1-4 years
☐ 5-9 years ☐ 10+ years

OCCUPATIONAL HISTORY

Have you ever worked in:

44. A foundry? (As long as one year) 1. ☐ Yes 2. ☐ No

45. Stone or mineral mining, quarrying or processing?
(As long as one year) 1. ☐ Yes 2. ☐ No

46. Asbestos milling or processing? (Ever) 1. ☐ Yes 2. ☐ No

47. Cotton or cotton blend mill? (For controls only) 1. ☐ Yes 2. ☐ No

48. Other dusts, fumes or smoke: If yes, specify. 1. ☐ Yes 2. ☐ No

Type of exposure_____

Length of exposure_____

APPENDIX B-III
Abbreviated Respiratory Questionnaire.

A. IDENTIFICATION DATA

Plant_____ **Social Security No.**_____

Name_____ **Date of Interview**_____ **Day** (figures) **Month** **Year** (last 2 digits)

(Surname)

_____ **Date of Birth**_____

(First Names)

Address_____ **Age**_____**(8, 9) Sex**_____ **M** **F**
(10)

_____ **Race**

W	N	IND.	OTHER

(11)

Interviewer: 1 2 3 4 5 6 7 8 (12)

Work Shift: 1st_____**2nd**_____**3rd**_____**(13)** **Standing Height**_____ **(14, 15)**

Present Work Area **Weight**_____ **(16, 18)**

If working in more than one specified work area, x area where most of the work shift is spent. If "other," but spending 25% of the work shift in one of the specified work areas, classify in that work area. If carding department employee, check area within that department where most of the work shift is being spent (if in doubt, check "throughout"). For work areas such as spinning and weaving where many work rooms may be involved, be sure to sure to check the specific work room to which the employee is assigned – if he works in more than one work room within a department classify as 7 (all) for that department.

	Workroom Number	(19) Open	(20) Pick	Area	(21) Card #1	(22) #2	(23) Spin	(24) Wind	(25) Twist	(26) Spool	(27) Warp	(28) Slash	(29) Weave	(30) Other
At Risk (cotton & cotton blend)	1			Cards										
	2			Draw										
	3			Comb										
	4			Rove										
	5			Thru Out										
	6													
	7 (all)													
Control (synthetic & Wool	8													
Ex-worker (cotton)	9													

Use actual wording of each question. Put X in appropriate square after each question. When in doubt record 'No'. When no square, circle appropriate answer.

B. COUGH

(on getting up) *

Do you usually cough first thing in the morning?_____Yes_____ No_____ (31)
(Count a cough with first smoke or on "first going out of doors." exclude clearing throat or a single cough.)

Do you usually cough during the day or at night?_____Yes_____ No_____ (32)
(Ignore an occasional cough.)

If 'Yes' to either question (31, 32):

Do you cough like this on most days for as much as three months a year?_____Yes_____ No_____ (33)
Do you cough on any particular day of the week?_____Yes_____ No_____ (34)

	(1)	(2)	(3)	(4)	(5)	(6)	(7)	
If 'Yes': Which day?	**Mon.**	**Tues.**	**Wed.**	**Thur.**	**Fri.**	**Sat.**	**Sun.**	
								(35)

C. PHLEGM or alternative word to suit local custom.

(on getting up)*

Do you usually bring up any phlegm from your chest first thing in the morning? (Count phlegm with the first smoke or on "first going out of doors." Exclude phlegm from the nose. Count swallowed phlegm.)_____Yes_____ No_____ (36)
Do you usually bring up any phlegm from your chest during the day or at night? (Accept twice or more.)_____Yes_____ No_____ (37)

If 'Yes' to either question ((36) or (37):
Do you bring up phlegm like this on most days for as much as three months each year?_____Yes_____ No_____ (38)

If 'Yes' to question (33) or (38):

(cough)

How long have you had this phlegm?

(Write in number of years)

(1) ☐ 2 years or less
(2) ☐ More than 2 years – 9 years
(3) ☐ 10 – 19 years
(4) ☐ 20+ years

***These words are for subjects who work at night.**

D. TIGHTNESS

Does your chest ever feel tight or your breathing become difficult?_____ Yes_____ No_____(39)
Is your chest tight or your breathing difficult on any particular day of the week? (After a week or 10 days away from the mill)_____ Yes_____ No_____(40)

		(3)	(4)	(5)	(6)	(7)	(8)
If 'Yes' Which day?	**Mon.**	**Tues.**	**Wed.**	**Thur.**	**Fri.**	**Sat.**	**Sun.**

	(1)	(2)
	Sometimes	**Always**

If 'Yes' Monday, At what time on Monday does your chest tight or your breathing difficult?
(Ask only if No to Question (45)

1. ☐ Before entering the mill (42)
2. ☐ After entering the mill

In the past, has your chest ever been tight or your breathing difficult on any particular day of the week?_____ Yes_____ No_____(43)

If 'Yes' Which day?	**Mon.**	**(3) Tues.**	**(4) Wed.**	**(5) Thur.**	**(6) Fri.**	**(7) Sat.**	**(8) Sun.**

(1) Sometimes **(2) Always**

E. TOBACCO SMOKING

***Have you changed your smoking habits since last interview?**
If yes, specify what changes.

WAC 296-62-14539 Appendix C--Spirometry prediction tables for normal males and females.

TABLE 1. PREDICTED FVC FOR MALES (KNUDSON, ET AL.: AM. REV. RESPIR. DIS. 1976, 113, 587.)												
……..AGE												
HT	17	19	21	23	25	27	29	31	33	35	37	39
60.0	3.44	3.59	3.75	3.91	3.72	3.66	3.61	3.55	3.49	3.43	3.37	3.32
60.5	3.50	3.66	3.81	3.97	3.80	3.75	3.69	3.63	3.57	3.51	3.46	3.40
61.0	3.56	3.72	3.88	4.03	3.89	3.83	3.77	3.71	3.66	3.60	3.54	3.48
61.5	3.63	3.78	3.94	4.10	3.97	3.91	3.85	3.80	3.74	3.68	3.62	3.56
62.0	3.69	3.85	4.00	4.16	4.05	3.99	3.94	3.88	3.82	3.76	3.70	3.65
62.5	3.76	3.91	4.07	4.22	4.13	4.08	4.02	3.96	3.90	3.84	3.79	3.73
63.0	3.82	3.97	4.13	4.29	4.22	4.16	4.10	4.04	3.99	3.93	3.87	3.81
63.5	3.88	4.04	4.19	4.35	4.30	4.25	4.18	4.13	4.07	4.01	3.95	3.89
64.0	3.95	4.10	4.26	4.41	4.38	4.32	4.27	4.21	4.15	4.09	4.03	3.98
64.5	4.01	4.17	4.32	4.48	4.46	4.41	4.35	4.29	4.23	4.17	4.12	4.06
65.0	4.07	4.23	4.39	4.54	4.55	4.49	4.43	4.37	4.32	4.26	4.20	4.14
65.5	4.14	4.29	4.45	4.60	4.63	4.57	4.51	4.46	4.40	4.34	4.28	4.22
66.0	4.20	4.36	4.51	4.67	4.71	4.65	4.60	4.54	4.48	4.42	4.36	4.31
66.5	4.26	4.42	4.58	4.73	4.80	4.74	4.68	4.62	4.56	4.51	4.45	4.39
67.0	4.33	4.48	4.64	4.80	4.88	4.82	4.76	4.70	4.65	4.59	4.53	4.47
67.5	4.39	4.55	4.70	4.86	4.96	4.90	4.84	4.79	4.73	4.67	4.61	4.55
68.0	4.45	4.61	4.77	4.92	5.04	4.98	4.93	4.87	4.81	4.75	4.69	4.64
68.5	4.52	4.67	4.83	4.99	5.13	5.07	5.01	4.95	4.89	4.84	4.78	4.72
69.0	4.58	4.74	4.89	5.05	5.21	5.15	5.09	5.03	4.98	4.92	4.86	4.80
69.5	4.64	4.80	4.96	5.11	5.29	5.23	5.17	5.12	5.06	5.00	4.94	4.88
70.0	4.71	4.86	5.02	5.18	5.37	5.32	5.26	5.20	5.14	5.08	5.02	4.97
70.5	4.77	4.93	5.08	5.24	5.46	5.40	5.34	5.28	5.22	5.17	5.11	5.05
71.0	4.83	4.99	5.15	5.30	5.54	5.48	5.42	5.36	5.31	5.25	5.19	5.13
71.5	4.90	5.05	5.21	5.37	5.62	5.56	5.50	5.45	5.39	5.33	5.27	5.21
72.0	4.96	5.12	5.27	5.43	5.70	5.65	5.59	5.53	5.47	5.41	5.36	5.30
72.5	5.03	5.18	5.34	5.49	5.79	5.73	5.67	5.61	5.55	5.50	5.44	5.38
73.0	5.09	5.24	5.40	5.56	5.87	5.81	5.75	5.69	5.64	5.58	5.52	5.46
73.5	5.15	5.31	5.46	5.62	5.95	5.89	5.83	5.78	5.70	5.66	5.60	5.54
74.0	5.22	5.37	5.53	5.68	6.03	5.98	5.92	5.86	5.80	5.74	5.69	5.63
74.5	5.28	5.44	5.59	5.75	6.12	6.06	6.00	5.94	5.88	5.83	5.77	5.71
75.0	5.34	5.50	5.65	5.81	6.20	6.14	6.08	6.02	5.97	5.91	5.85	5.79
75.5	5.41	5.56	5.72	5.87	6.28	6.22	6.17	6.11	6.05	5.99	5.93	5.88
76.0	5.47	5.63	5.78	5.94	6.36	6.31	6.25	6.19	6.13	6.07	6.02	5.96
76.5	5.53	5.69	5.85	6.00	6.45	6.39	6.33	6.27	6.21	6.16	6.10	6.04
77.0	5.60	5.75	5.91	6.06	6.53	6.47	6.41	6.35	6.30	6.24	6.18	6.12
77.5	5.66	5.82	5.97	6.13	6.61	6.55	6.50	6.44	6.38	6.32	6.26	6.21
78.0	5.72	5.88	6.04	6.19	6.69	6.64	6.58	6.52	6.46	6.40	6.35	6.29
78.5	5.79	5.94	6.10	6.26	6.78	6.72	6.66	6.60	6.54	6.49	6.43	6.37
79.0	5.85	6.01	6.16	6.32	6.86	6.80	6.74	6.68	6.63	6.57	6.51	6.45
79.5	5.91	6.07	6.23	6.38	6.94	6.88	6.83	6.77	6.71	6.65	6.59	6.54
80.0	5.98	6.13	6.29	6.45	7.02	6.97	6.91	6.85	6.79	6.73	6.68	6.62
80.5	6.04	6.20	6.35	6.51	7.11	7.05	6.99	6.93	6.87	6.82	6.76	6.70
81.0	6.10	6.26	6.42	6.57	7.19	7.13	7.07	7.02	6.96	6.90	6.84	6.78
81.5	6.17	6.32	6.48	6.64	7.27	7.21	7.16	7.10	7.04	6.98	6.92	6.87
82.0	6.23	6.39	6.54	6.70	7.35	7.30	7.24	7.18	7.12	7.06	7.01	6.95
82.5	6.30	6.45	6.61	6.76	7.44	7.38	7.32	7.26	7.20	7.15	7.09	7.03
83.0	6.36	6.51	6.67	6.83	7.52	7.46	7.40	7.35	7.29	7.23	7.17	7.11
83.5	6.42	6.58	6.73	6.89	7.60	7.54	7.49	7.43	7.37	7.31	7.25	7.20
84.0	6.49	6.64	6.80	6.95	7.68	7.63	7.57	7.51	7.45	7.39	7.34	7.28
84.5	6.55	6.71	6.86	7.02	7.77	7.71	7.65	7.59	7.53	7.48	7.42	7.36
85.0	6.61	6.77	6.92	7.08	7.85	7.79	7.73	7.68	7.62	7.56	7.50	7.44

	AGE												
HT	41	43	45	47	49	51	53	55	57	59	61	63	65
60.0	3.26	3.20	3.14	3.08	3.03	2.97	2.91	2.85	2.79	2.74	2.68	2.62	2.56
60.5	3.34	3.28	3.22	3.17	3.11	3.05	2.99	2.93	2.88	2.82	2.76	2.70	2.64
61.0	3.42	3.37	3.31	3.25	3.19	3.13	3.08	3.02	2.96	2.90	2.84	2.79	2.73
61.5	3.51	3.45	3.39	3.33	3.27	3.22	3.16	3.10	3.04	2.98	2.93	2.87	2.81
62.0	3.59	3.53	3.47	3.41	3.36	3.30	3.24	3.18	3.12	3.07	3.01	2.95	2.89
62.5	3.67	3.61	3.55	3.50	3.44	3.38	3.32	3.26	3.21	3.15	3.09	3.03	2.97
63.0	3.75	3.70	3.64	3.58	3.52	3.46	3.41	3.35	3.29	3.23	3.17	3.12	3.06
63.5	3.84	3.78	3.72	3.66	3.60	3.55	3.49	3.43	3.37	3.31	3.26	3.20	3.14
64.0	3.92	3.86	3.80	3.74	3.69	3.63	3.57	3.51	3.45	3.40	3.34	3.28	3.22
64.5	4.00	3.94	3.88	3.83	3.77	3.71	3.65	3.59	3.54	3.48	3.42	3.36	3.30
65.0	4.08	4.03	3.97	3.91	3.85	3.79	3.74	3.68	3.62	3.56	3.50	3.45	3.39
65.5	4.17	4.11	4.05	3.99	3.93	3.88	3.82	3.76	3.70	3.64	3.59	3.53	3.47
66.0	4.25	4.19	4.13	4.07	4.02	3.96	3.90	3.84	3.78	3.73	3.67	3.61	3.55
66.5	4.33	4.27	4.22	4.16	4.10	4.04	3.98	3.93	3.87	3.81	3.75	3.69	3.64
67.0	4.41	4.36	4.30	4.24	4.18	4.12	4.07	4.01	3.95	3.89	3.83	3.78	3.72
67.5	4.50	4.44	4.38	4.32	4.26	4.21	4.15	4.09	4.03	3.97	3.92	3.86	3.80
68.0	4.58	4.52	4.46	4.40	4.35	4.29	4.23	4.17	4.11	4.06	4.00	3.94	3.88
68.5	4.66	4.60	4.55	4.49	4.43	4.37	4.31	4.26	4.20	4.14	4.08	4.02	3.97
69.0	4.74	4.69	4.63	4.57	4.51	4.45	4.40	4.34	4.28	4.22	4.16	4.11	4.05
69.5	4.83	4.77	4.71	4.65	4.59	4.54	4.48	4.42	4.36	4.30	4.25	4.19	4.13
70.0	4.91	4.85	4.79	4.74	4.68	4.62	4.56	4.50	4.44	4.39	4.33	4.27	4.21
70.5	4.99	4.93	4.88	4.82	4.76	4.70	4.64	4.59	4.53	4.47	4.41	4.35	4.30
71.0	5.07	5.02	4.96	4.90	4.84	4.78	4.73	4.67	4.61	4.55	4.49	4.44	4.38
71.5	5.16	5.10	5.04	4.98	4.92	4.87	4.81	4.75	4.69	4.63	4.58	4.52	4.46
72.0	5.24	5.18	5.12	5.07	5.01	4.95	4.89	4.83	4.78	4.72	4.66	4.60	4.54
72.5	5.32	5.26	5.21	5.15	5.09	5.03	4.97	4.92	4.86	4.80	4.74	4.68	4.63
73.0	5.40	5.35	5.29	5.23	5.17	5.11	5.06	5.00	4.94	4.88	4.82	4.77	4.71
73.5	5.49	5.43	5.37	5.31	5.25	5.20	5.14	5.08	5.02	4.96	4.91	4.85	4.79
74.0	5.57	5.51	5.45	5.40	5.34	5.28	5.22	5.16	5.11	5.05	4.99	4.93	4.87
74.5	5.65	5.59	5.54	5.48	5.42	5.36	5.30	5.25	5.19	5.13	5.07	5.01	4.96
75.0	5.73	5.68	5.62	5.56	5.50	5.44	5.39	5.33	5.27	5.21	5.15	5.10	5.04
75.5	5.82	5.76	5.70	5.64	5.59	5.53	5.47	5.41	5.35	5.30	5.24	5.18	5.12
76.0	5.90	5.84	5.78	5.73	5.67	5.61	5.55	5.49	5.44	5.38	5.32	5.26	5.20
76.5	5.98	5.92	5.87	5.81	5.75	5.69	5.63	5.58	5.52	5.46	5.40	5.34	5.29
77.0	6.06	6.01	5.95	5.89	5.83	5.77	5.72	5.66	5.60	5.54	5.48	5.43	5.37
77.5	6.15	6.09	6.03	5.97	5.92	5.86	5.80	5.74	5.68	5.63	5.57	5.51	5.45
78.0	6.23	6.17	6.11	6.06	6.00	5.94	5.88	5.82	5.77	5.71	5.65	5.59	5.53
78.5	6.31	6.25	6.20	6.14	6.08	6.02	5.96	5.91	5.85	5.79	5.73	5.67	5.62
79.0	6.39	6.34	6.28	6.22	6.16	6.10	6.05	5.99	5.93	5.87	5.81	5.76	5.70
79.5	6.48	6.42	6.36	6.30	6.25	6.19	6.13	6.07	6.01	5.96	5.90	5.84	5.78
80.0	6.56	6.50	6.44	6.39	6.33	6.27	6.21	6.15	6.10	6.04	5.98	5.92	5.86
80.5	6.64	6.58	6.53	6.47	6.41	6.35	6.29	6.24	6.18	6.12	6.06	6.00	5.95
81.0	6.73	6.67	6.61	6.55	6.49	6.44	6.38	6.32	6.26	6.20	6.15	6.09	6.03
81.5	6.81	6.75	6.69	6.63	6.58	6.52	6.46	6.40	6.34	6.29	6.23	6.17	6.11
82.0	6.89	6.83	6.77	6.72	6.66	6.60	6.54	6.48	6.43	6.37	6.31	6.25	6.19
82.5	6.97	6.91	6.86	6.80	6.74	6.68	6.62	6.57	6.51	6.45	6.39	6.33	6.28
83.0	7.06	7.00	6.94	6.88	6.82	6.77	6.71	6.65	6.59	6.53	6.48	6.42	6.36
83.5	7.14	7.08	7.02	6.96	6.91	6.85	6.79	6.73	6.67	6.62	6.56	6.50	6.44
84.0	7.22	7.16	7.10	7.05	6.99	6.93	6.87	6.81	6.76	6.70	6.64	6.58	6.52
84.5	7.30	7.24	7.19	7.13	7.07	7.01	6.95	6.90	6.84	6.78	6.72	6.66	6.61
85.0	7.39	7.33	7.27	7.21	7.15	7.10	7.04	6.98	6.92	6.86	6.81	6.75	6.69

TABLE 2. PREDICTED FEV(1) FOR MALES (KNUDSON. ET AL.: AM. REV. RESPIR. DIS. 1976, 113, 587.)												
……..AGE												
HT	17	19	21	23	25	27	29	31	33	35	37	39
60.0	2.97	3.06	3.15	3.24	3.05	2.99	2.94	2.88	2.83	2.78	2.72	2.67
60.5	3.03	3.12	3.21	3.30	3.11	3.06	3.00	2.95	2.90	2.84	2.79	2.73
61.0	3.08	3.17	3.26	3.35	3.18	3.12	3.07	3.02	2.96	2.91	2.85	2.80
61.5	3.14	3.23	3.32	3.41	3.24	3.19	3.14	3.08	3.03	2.97	2.92	2.87
62.0	3.20	3.29	3.38	3.47	3.31	3.26	3.20	3.15	3.09	3.04	2.99	2.93
62.5	3.26	3.35	3.44	3.53	3.38	3.32	3.27	3.22	3.16	3.11	3.05	3.00
63.0	3.32	3.41	3.50	3.59	3.44	3.39	3.34	3.28	3.23	3.17	3.12	3.07
63.5	3.38	3.47	3.56	3.65	3.51	3.46	3.40	3.35	3.29	3.24	3.19	3.13
64.0	3.43	3.52	3.61	3.70	3.58	3.52	3.47	3.41	3.36	3.31	3.25	3.20
64.5	3.49	3.58	3.67	3.76	3.64	3.59	3.53	3.48	3.43	3.37	3.32	3.26
65.0	3.55	3.64	3.73	3.82	3.71	3.65	3.60	3.55	3.49	3.44	3.38	3.33
65.5	3.61	3.70	3.79	3.88	3.77	3.72	3.67	3.61	3.56	3.50	3.45	3.40
66.0	3.67	3.76	3.85	3.94	3.84	3.79	3.73	3.68	3.62	3.57	3.52	3.46
66.5	3.73	3.82	3.91	4.00	3.91	3.85	3.80	3.74	3.69	3.64	3.58	3.53
67.0	3.79	3.88	3.97	4.06	3.97	3.92	3.86	3.81	3.76	3.70	3.65	3.59
67.5	3.84	3.93	4.02	4.11	4.04	3.98	3.93	3.88	3.82	3.77	3.71	3.66
68.0	3.90	3.99	4.08	4.17	4.10	4.05	4.00	3.94	3.89	3.83	3.78	3.73
68.5	3.96	4.05	4.14	4.23	4.17	4.12	4.06	4.01	3.95	3.90	3.85	3.79
69.0	4.02	4.11	4.20	4.29	4.24	4.18	4.13	4.07	4.02	3.97	3.91	3.86
69.5	4.08	4.17	4.26	4.35	4.30	4.25	4.19	4.14	4.09	4.03	3.98	3.92
70.0	4.14	4.23	4.32	4.41	4.37	4.31	4.26	4.21	4.15	4.10	4.04	3.99
70.5	4.19	4.28	4.37	4.46	4.43	4.38	4.33	4.27	4.22	4.16	4.11	4.06
71.0	4.25	4.34	4.43	4.52	4.50	4.45	4.39	4.34	4.28	4.23	4.18	4.12
71.5	4.31	4.40	4.49	4.58	4.57	4.51	4.46	4.40	4.35	4.30	4.24	4.19
72.0	4.37	4.46	4.55	4.64	4.63	4.58	4.52	4.47	4.42	4.36	4.31	4.25
72.5	4.43	4.52	4.61	4.70	4.70	4.64	4.59	4.54	4.48	4.43	4.37	4.32
73.0	4.49	4.58	4.67	4.76	4.76	4.71	4.66	4.60	4.55	4.49	4.44	4.39
73.5	4.54	4.63	4.72	4.81	4.83	4.78	4.72	4.67	4.61	4.56	4.51	4.45
74.0	4.60	4.69	4.78	4.87	4.90	4.84	4.79	4.73	4.68	4.63	4.57	4.52
74.5	4.66	4.75	4.84	4.93	4.96	4.91	4.85	4.80	4.75	4.69	4.64	4.58
75.0	4.72	4.81	4.90	4.99	5.03	4.97	4.92	4.87	4.81	4.76	4.70	4.65
75.5	4.78	4.87	4.96	5.05	5.09	5.04	4.99	4.93	4.88	4.82	4.77	4.72
76.0	4.84	4.93	5.02	5.11	5.16	5.11	5.05	5.00	4.94	4.89	4.84	4.78
76.5	4.90	4.99	5.08	5.17	5.23	5.17	5.12	5.06	5.01	4.96	4.90	4.85
77.0	4.95	5.04	5.13	5.22	5.29	5.24	5.18	5.13	5.08	5.02	4.97	4.91
77.5	5.01	5.10	5.19	5.28	5.36	5.30	5.25	5.20	5.14	5.09	5.03	4.98
78.0	5.07	5.16	5.25	5.34	5.42	5.37	5.32	5.26	5.21	5.15	5.10	5.05
78.5	5.13	5.22	5.31	5.40	5.49	5.44	5.38	5.33	5.27	5.22	5.17	5.11
79.0	5.19	5.28	5.37	5.46	5.56	5.50	5.45	5.39	5.34	5.29	5.23	5.18
79.5	5.25	5.34	5.43	5.52	5.62	5.57	5.51	5.46	5.41	5.35	5.30	5.24
80.0	5.30	5.39	5.48	5.57	5.69	5.63	5.58	5.53	5.47	5.42	5.36	5.31
80.5	5.36	5.45	5.54	5.63	5.75	5.70	5.65	5.59	5.54	5.48	5.43	5.38
81.0	5.42	5.51	5.60	5.69	5.82	5.77	5.71	5.66	5.60	5.55	5.50	5.44
81.5	5.48	5.57	5.66	5.75	5.89	5.83	5.78	5.72	5.67	5.62	5.56	5.51
82.0	5.54	5.63	5.72	5.81	5.95	5.90	5.84	5.79	5.74	5.68	5.63	5.57
82.5	5.60	5.69	5.78	5.87	6.02	5.96	5.91	5.86	5.80	5.75	5.69	6.64
83.0	5.65	5.74	5.83	5.92	6.08	6.03	5.98	5.92	5.87	5.81	5.76	5.71
83.5	5.71	5.80	5.90	5.98	6.15	6.10	6.04	5.99	5.93	5.88	5.83	5.77
84.0	5.77	5.86	5.95	6.04	6.22	6.16	6.11	6.05	6.00	5.95	5.89	5.84
84.5	5.83	5.92	6.01	6.10	6.28	6.23	6.12	6.17	6.07	6.01	5.96	5.90
85.0	5.89	5.98	6.07	6.16	6.36	6.29	6.24	6.19	6.13	6.06	6.02	5.97

	AGE												
HT	41	43	45	47	49	51	53	55	57	59	61	63	65
60.0	2.61	2.56	2.51	2.45	2.40	2.34	2.29	2.24	2.18	2.13	2.07	2.02	1.97
60.5	2.68	2.63	2.57	2.52	2.46	2.41	2.36	2.30	2.25	2.19	2.14	2.09	2.03
61.0	2.75	2.69	2.64	2.58	2.53	2.48	2.42	2.37	2.31	2.26	2.21	2.15	2.10
61.5	2.81	2.76	2.70	2.65	2.60	2.54	2.49	2.43	2.38	2.33	2.27	2.22	2.16
62.0	2.88	2.82	2.77	2.72	2.66	2.61	2.55	2.50	2.45	2.39	2.34	2.28	2.23
62.5	2.95	2.89	2.84	2.78	2.73	2.68	2.62	2.57	2.51	2.46	2.41	2.35	2.30
63.0	3.01	2.96	2.90	2.85	2.80	2.74	2.69	2.63	2.58	2.53	2.47	2.42	2.36
63.5	3.08	3.02	2.97	2.92	2.86	2.81	2.75	2.70	2.65	2.59	2.54	2.48	2.43
64.0	3.14	3.09	3.04	2.98	2.93	2.87	2.82	2.77	2.71	2.66	2.60	2.55	2.50
64.5	3.21	3.16	3.10	3.05	2.99	2.94	2.89	2.83	2.78	2.72	2.67	2.62	2.56
65.0	3.28	3.22	3.17	3.11	3.06	3.01	2.95	2.90	2.84	2.79	2.74	2.68	2.63
65.5	3.34	3.29	3.23	3.18	3.13	3.07	3.02	2.96	2.91	2.86	2.80	2.75	2.69
66.0	3.41	3.35	3.30	3.25	3.19	3.14	3.08	3.03	2.98	2.92	2.87	2.81	2.76
66.5	3.47	3.42	3.37	3.31	3.26	3.20	3.15	3.10	3.04	2.99	2.93	2.88	2.83
67.0	3.54	3.49	3.43	3.38	3.32	3.27	3.22	3.16	3.11	3.05	3.00	2.95	2.89
67.5	3.61	3.55	3.50	3.44	3.39	3.34	3.28	3.23	3.17	3.12	3.07	3.01	2.96
68.0	3.67	3.62	3.56	3.51	3.46	3.40	3.35	3.29	3.24	3.19	3.13	3.08	3.02
68.5	3.74	3.68	3.63	3.58	3.52	3.47	3.41	3.36	3.31	3.25	3.20	3.14	3.09
69.0	3.80	3.75	3.70	3.64	3.59	3.53	3.48	3.43	3.37	3.32	3.26	3.21	3.16
69.5	3.87	3.82	3.76	3.71	3.65	3.60	3.55	3.49	3.44	3.38	3.33	3.28	3.22
70.0	3.94	3.88	3.83	3.77	3.72	3.67	3.61	3.56	3.50	3.45	3.40	3.34	3.29
70.5	4.00	3.95	3.89	3.84	3.79	3.73	3.68	3.62	3.57	3.52	3.46	3.41	3.35
71.0	4.07	4.01	3.96	3.91	3.85	3.80	3.74	3.69	3.64	3.58	3.53	3.47	3.42
71.5	4.13	4.08	4.03	3.97	3.92	3.86	3.81	3.76	3.70	3.65	3.59	3.54	3.49
72.0	4.20	4.15	4.09	4.04	3.98	3.93	3.88	3.82	3.77	3.71	3.66	3.61	3.55
72.5	4.27	4.21	4.16	4.10	4.05	4.00	3.94	3.89	3.83	3.78	3.73	3.67	3.62
73.0	4.33	4.28	4.22	4.17	4.12	4.06	4.01	3.95	3.90	3.85	3.79	3.74	3.68
73.5	4.40	4.34	4.29	4.24	4.18	4.13	4.07	4.02	3.97	3.91	3.86	3.80	3.75
74.0	4.46	4.41	4.36	4.30	4.25	4.19	4.14	4.09	4.03	3.98	3.92	3.87	3.82
74.5	4.53	4.48	4.42	4.37	4.31	4.26	4.21	4.15	4.10	4.04	3.99	3.94	3.88
75.0	4.60	4.54	4.49	4.43	4.38	4.33	4.27	4.22	4.16	4.11	4.06	4.00	3.95
75.5	4.66	4.61	4.55	4.50	4.45	4.39	4.34	4.28	4.23	4.18	4.12	4.07	4.01
76.0	4.73	4.67	4.62	4.57	4.51	4.46	4.40	4.35	4.30	4.24	4.19	4.13	4.08
76.5	4.79	4.74	4.69	4.63	4.58	4.52	4.47	4.42	4.36	4.31	4.25	4.20	4.15
77.0	4.86	4.81	4.75	4.70	4.64	4.59	4.54	4.48	4.43	4.37	4.32	4.27	4.21
77.5	4.93	4.87	4.82	4.76	4.71	4.66	4.60	4.55	4.49	4.44	4.39	4.33	4.28
78.0	4.99	4.94	4.88	4.83	4.78	4.72	4.67	4.61	4.56	4.51	4.45	4.40	4.34
78.5	5.06	5.00	4.95	4.90	4.84	4.79	4.73	4.68	4.63	4.57	4.52	4.46	4.41
79.0	5.12	5.07	5.02	4.96	4.91	4.85	4.80	4.75	4.69	4.64	4.58	4.53	4.48
79.5	5.19	5.14	5.08	5.03	4.97	4.92	4.87	4.81	4.76	4.70	4.65	4.60	4.54
80.0	5.26	5.20	5.15	5.09	5.04	4.99	4.93	4.88	4.82	4.77	4.72	4.66	4.61
80.5	5.32	5.27	5.21	5.16	5.11	5.05	5.00	4.94	4.89	4.84	4.78	4.73	4.67
81.0	5.39	5.33	5.28	5.23	5.17	5.12	5.06	5.01	4.96	4.90	4.85	4.79	4.74
81.5	5.45	5.40	5.35	5.29	5.24	5.18	5.13	5.08	5.02	4.97	4.91	4.86	4.81
82.0	5.52	5.47	5.41	5.36	5.30	5.25	5.20	5.14	5.09	5.03	4.98	4.93	4.87
82.5	5.59	5.53	5.48	5.42	5.37	5.32	5.26	5.21	5.15	5.10	5.05	4.99	4.94
83.0	5.65	5.60	5.54	5.49	5.44	5.38	5.33	5.27	5.22	5.17	5.11	5.06	5.00
83.5	5.72	5.66	5.61	5.56	5.50	5.45	5.39	5.34	5.29	5.23	5.18	5.12	5.07
84.0	5.78	5.73	5.68	5.62	5.57	5.51	5.46	5.41	5.35	5.30	5.24	5.19	5.14
84.5	5.85	5.80	5.74	5.69	5.63	5.58	5.53	5.47	5.42	5.36	5.31	5.26	5.20
85.0	5.92	5.86	5.81	5.75	5.70	5.65	5.59	5.54	5.58	5.43	5.38	5.32	5.27

TABLE 3. PREDICTED FVC FOR FEMALES (KNUDSON, ETAL.: AM. REV .RESPIR .DIS.1976,113,587.)												
	AGE											
HT	17	19	21	23	25	27	29	31	33	35	37	39
52.0	2.45	2.64	2.65	2.61	2.56	2.52	2.47	2.43	2.39	2.34	2.30	2.25
52.5	2.50	2.68	2.70	2.65	2.61	2.57	2.52	2.48	2.43	2.39	2.35	2.30
53.0	2.54	2.72	2.74	2.70	2.66	2.61	2.57	2.52	2.48	2.44	2.39	2.35
53.5	2.58	2.76	2.79	2.75	2.70	2.66	2.62	2.57	2.53	2.48	2.44	2.40
54.0	2.62	2.81	2.84	2.79	2.75	2.71	2.66	2.62	2.57	2.53	2.49	2.44
54.5	2.66	2.85	2.89	2.84	2.80	2.75	2.71	2.67	2.62	2.58	2.53	2.49
55.0	2.71	2.89	2.93	2.89	2.84	2.80	2.76	2.71	2.67	2.62	2.58	2.54
55.5	2.75	2.93	2.98	2.94	2.89	2.85	2.80	2.76	2.72	2.67	2.63	2.58
56.0	2.79	2.97	3.03	2.98	2.94	2.89	2.85	2.81	2.76	2.72	2.67	2.63
56.5	2.83	3.01	3.07	3.03	2.99	2.94	2.90	2.85	2.81	2.77	2.72	2.68
57.0	2.87	3.06	3.12	3.08	3.03	2.99	2.94	2.90	2.86	2.81	2.77	2.72
57.5	2.91	3.10	3.17	3.12	3.08	3.04	2.99	2.95	2.90	2.86	2.82	2.77
58.0	2.96	3.14	3.21	3.17	3.13	3.08	3.04	2.99	2.95	2.91	2.86	2.82
58.5	3.00	3.18	3.26	3.22	3.17	3.13	3.09	3.04	3.00	2.95	2.91	2.87
59.0	3.04	3.22	3.31	3.26	3.22	3.18	3.13	3.09	3.04	3.00	2.96	2.91
59.5	3.08	3.27	3.36	3.31	3.27	3.22	3.18	3.14	3.09	3.05	3.00	2.96
60.0	3.12	3.31	3.40	3.36	3.31	3.27	3.23	3.18	3.14	3.09	3.05	3.01
60.5	3.17	3.35	3.45	3.41	3.36	3.32	3.27	3.23	3.19	3.14	3.10	3.05
61.0	3.21	3.39	3.50	3.45	3.41	3.36	3.32	3.28	3.23	3.19	3.14	3.10
61.5	3.25	3.43	3.54	3.50	3.46	3.41	3.37	3.32	3.28	3.24	3.19	3.15
62.0	3.29	3.48	3.59	3.55	3.50	3.46	3.41	3.37	3.33	3.28	3.24	3.19
62.5	3.33	3.52	3.64	3.59	3.55	3.51	3.46	3.42	3.37	3.33	3.29	3.24
63.0	3.38	3.56	3.68	3.64	3.60	3.55	3.51	3.46	3.42	3.38	3.33	3.29
63.5	3.42	3.60	3.73	3.69	3.64	3.60	3.56	3.51	3.47	3.42	3.38	3.34
64.0	3.46	3.64	3.78	3.73	3.69	3.65	3.60	3.56	3.51	3.47	3.43	3.38
64.5	3.50	3.69	3.83	3.78	3.74	3.69	3.65	3.61	3.56	3.52	3.47	3.43
65.0	3.54	3.73	3.87	3.83	3.78	3.74	3.70	3.65	3.61	3.56	3.52	3.48
65.5	3.59	3.77	3.92	3.88	3.83	3.79	3.74	3.70	3.66	3.61	3.57	3.52
66.0	3.63	3.81	3.97	3.92	3.88	3.83	3.79	3.75	3.70	3.66	3.61	3.57
66.5	3.67	3.85	4.01	3.97	3.93	3.88	3.84	3.79	3.75	3.71	3.66	3.62
67.0	3.71	3.89	4.06	4.02	3.97	3.93	3.88	3.84	3.80	3.75	3.71	3.66
67.5	3.75	3.94	4.11	4.06	4.02	3.98	3.93	3.89	3.84	3.80	3.76	3.71
68.0	3.79	3.98	4.15	4.11	4.07	4.02	3.98	3.93	3.89	3.85	3.80	3.76
68.5	3.84	4.02	4.20	4.16	4.11	4.07	4.03	3.98	3.94	3.89	3.85	3.81
69.0	3.88	4.06	4.25	4.20	4.16	4.12	4.07	4.03	3.98	3.94	3.90	3.85
69.5	3.92	4.10	4.30	4.29	4.21	4.16	4.12	4.08	4.03	3.99	3.94	3.90
70.0	3.96	4.15	4.34	4.30	4.25	4.21	4.17	4.12	4.08	4.03	3.99	3.95
70.5	4.00	4.19	4.39	4.35	4.30	4.26	4.21	4.17	4.13	4.08	4.04	3.99
71.0	4.05	4.23	4.44	4.39	4.35	4.30	4.26	4.22	4.17	4.13	4.08	4.04
71.5	4.09	4.27	4.48	4.44	4.40	4.35	4.31	4.26	4.22	4.18	4.13	4.09
72.0	4.13	4.31	4.53	4.49	4.44	4.40	4.35	4.31	4.27	4.22	4.18	4.13
72.5	4.17	4.36	4.58	4.53	4.49	4.45	4.40	4.36	4.31	4.27	4.23	4.18
73.0	4.21	4.40	4.62	4.58	4.54	4.49	4.45	4.40	4.36	4.32	4.27	4.23
73.5	4.26	4.44	4.67	4.63	4.50	4.54	4.50	4.45	4.41	4.36	4.32	4.28
74.0	4.30	4.48	4.72	4.67	4.63	4.59	4.54	4.50	4.45	4.41	4.37	4.32
74.5	4.34	4.52	4.77	4.72	4.68	4.63	4.59	4.55	4.50	4.46	4.41	4.37
75.0	4.38	4.57	4.81	4.77	4.72	4.68	4.64	4.59	4.55	4.50	4.46	4.42
75.5	4.42	4.61	4.86	4.82	4.77	4.73	4.68	4.64	4.60	4.55	4.51	4.46
76.0	4.47	4.65	4.91	4.86	4.82	4.77	4.73	4.69	4.64	4.60	4.55	4.51
76.5	4.51	4.69	4.95	4.91	4.87	4.82	4.78	4.73	4.69	4.65	4.60	4.56
77.0	4.55	4.73	5.00	4.96	4.91	4.87	4.82	4.78	4.74	4.69	4.65	4.60

	AGE												
HT	41	43	45	47	49	51	53	55	57	59	61	63	65
52.0	2.21	2.17	2.12	2.08	2.03	1.99	1.95	1.90	1.86	1.81	1.77	1.73	1.68
52.5	2.26	2.21	2.17	2.13	2.08	2.04	1.99	1.95	1.91	1.86	1.82	1.77	1.73
53.0	2.30	2.26	2.22	2.17	2.13	2.08	2.04	2.00	1.95	1.91	1.86	1.82	1.78
53.5	2.35	2.31	2.26	2.22	2.18	2.13	2.09	2.04	2.00	1.96	1.91	1.87	1.82
54.0	2.40	2.35	2.31	2.27	2.22	2.18	2.13	2.09	2.05	2.00	1.96	1.91	1.87
54.5	2.45	2.40	2.36	2.31	2.27	2.23	2.18	2.14	2.09	2.05	2.01	1.96	1.92
55.0	2.49	2.45	2.40	2.36	2.32	2.27	2.23	2.18	2.14	2.10	2.05	2.01	1.96
55.5	2.54	2.50	2.45	2.41	2.36	2.32	2.28	2.23	2.19	2.14	2.10	2.06	2.01
56.0	2.59	2.54	2.50	2.45	2.41	2.37	2.32	2.28	2.23	2.19	2.15	2.10	2.06
56.5	2.63	2.59	2.55	2.50	2.46	2.41	2.37	2.33	2.28	2.24	2.19	2.15	2.11
57.0	2.68	2.64	2.59	2.55	2.50	2.46	2.42	2.37	2.33	2.28	2.24	2.20	2.15
57.5	2.73	2.68	2.64	2.60	2.55	2.51	2.46	2.42	2.38	2.33	2.29	2.24	2.20
58.0	2.77	2.73	2.69	2.64	2.60	2.55	2.51	2.47	2.42	2.38	2.33	2.29	2.25
58.5	2.82	2.78	2.73	2.69	2.65	2.60	2.56	2.51	2.47	2.43	2.38	2.34	2.29
59.0	2.87	2.82	2.78	2.74	2.69	2.65	2.60	2.56	2.52	2.47	2.43	2.38	2.34
59.5	2.92	2.87	2.83	2.78	2.74	2.70	2.65	2.61	2.56	2.52	2.48	2.43	2.39
60.0	2.96	2.92	2.87	2.83	2.79	2.74	2.70	2.65	2.61	2.57	2.52	2.48	2.43
60.5	3.01	2.97	2.92	2.88	2.83	2.79	2.75	2.70	2.66	2.61	2.57	2.53	2.48
61.0	3.06	3.01	2.97	2.92	2.88	2.84	2.79	2.75	2.70	2.66	2.62	2.57	2.53
61.5	3.10	3.06	3.02	2.97	2.93	2.88	2.84	2.80	2.75	2.71	2.66	2.62	2.58
62.0	3.15	3.11	3.06	3.02	2.97	2.93	2.89	2.84	2.80	2.75	2.71	2.67	2.62
62.5	3.20	3.15	3.11	3.07	3.02	2.98	2.93	2.89	2.85	2.80	2.76	2.71	2.67
63.0	3.24	3.20	3.16	3.11	3.07	3.02	2.98	2.94	2.89	2.85	2.80	2.76	2.72
63.5	3.29	3.25	3.20	3.16	3.12	3.07	3.03	2.98	2.94	2.90	2.85	2.81	2.76
64.0	3.34	3.29	3.25	3.21	3.16	3.12	3.07	3.03	2.99	2.94	2.90	2.85	2.81
64.5	3.39	3.34	3.30	3.25	3.21	3.17	3.12	3.08	3.03	2.99	2.95	2.90	2.86
65.0	3.43	3.39	3.34	3.30	3.26	3.21	3.17	3.12	3.08	3.04	2.99	2.95	2.90
65.5	3.48	3.44	3.39	3.35	3.30	3.26	3.22	3.17	3.13	3.08	3.04	3.00	2.95
66.0	3.53	3.48	3.44	3.39	3.35	3.31	3.26	3.22	3.17	3.13	3.09	3.04	3.00
66.5	3.57	3.53	3.49	3.44	3.40	3.35	3.31	3.27	3.22	3.18	3.13	3.09	3.05
67.0	3.62	3.58	3.53	3.49	3.44	3.40	3.36	3.31	3.27	3.22	3.18	3.14	3.09
67.5	3.67	3.62	3.58	3.54	3.49	3.45	3.40	3.36	3.32	3.27	3.23	3.18	3.14
68.0	3.71	3.67	3.63	3.58	3.54	3.49	3.45	3.41	3.36	3.32	3.27	3.23	3.19
68.5	3.76	3.72	3.67	3.63	3.59	3.54	3.50	3.45	3.41	3.37	3.32	3.28	3.23
69.0	3.81	3.76	3.72	3.68	3.63	3.59	3.54	3.50	3.46	3.41	3.37	3.32	3.28
69.5	3.86	3.81	3.77	3.72	3.68	3.64	3.59	3.55	3.50	3.46	3.42	3.37	3.33
70.0	3.90	3.86	3.81	3.77	3.73	3.68	3.64	3.59	3.55	3.51	3.46	3.42	3.37
70.5	3.95	3.91	3.86	3.82	3.77	3.73	3.69	3.64	3.60	3.55	3.51	3.47	3.42
71.0	4.00	3.95	3.91	3.86	3.82	3.78	3.73	3.69	3.64	3.60	3.56	3.51	3.47
71.5	4.04	4.00	3.96	3.91	3.87	3.82	3.78	3.74	3.69	3.65	3.60	3.56	3.52
72.0	4.09	4.05	4.00	3.96	3.91	3.87	3.83	3.78	3.74	3.69	3.65	3.61	3.56
72.5	4.14	4.09	4.05	4.01	3.96	3.92	3.87	3.83	3.79	3.74	3.70	3.65	3.61
73.0	4.18	4.14	4.10	4.05	4.01	3.96	3.92	3.88	3.83	3.79	3.74	3.70	3.66
73.5	4.23	4.19	4.14	4.10	4.06	4.01	3.97	3.92	3.88	3.84	3.79	3.75	3.70
74.0	4.28	4.23	4.19	4.15	4.10	4.06	4.01	3.97	3.93	3.88	3.84	3.79	3.75
74.5	4.33	4.28	4.24	4.19	4.15	4.11	4.06	4.02	3.97	3.93	3.89	3.84	3.80
75.0	4.37	4.33	4.28	4.24	4.20	4.15	4.11	4.06	4.02	3.98	3.93	3.89	3.84
75.5	4.42	4.38	4.33	4.29	4.24	4.20	4.16	4.11	4.07	4.02	3.98	3.94	3.89
76.0	4.47	4.42	4.38	4.33	4.29	4.25	4.20	4.16	4.11	4.07	4.03	3.98	3.94
76.5	4.51	4.47	4.43	4.38	4.34	4.29	4.25	4.21	4.16	4.12	4.07	4.03	3.99
77.0	4.56	4.52	4.47	4.43	4.38	4.34	4.30	4.25	4.21	4.16	4.12	4.08	4.03

TABLE 4. PREDICTED FEV (1) FOR FEMALES (KNUDSON,ETAL.:AM. REV. RESPIR.DIS.1976,113,587.)												
	AGE											
HT	17	19	21	23	25	27	29	31	33	35	37	39
52.0	2.31	2.48	2.33	2.29	2.25	2.21	2.16	2.12	2.08	2.04	2.00	1.95
52.5	2.34	2.51	2.37	2.32	2.28	2.24	2.20	2.16	2.11	2.07	2.03	1.99
53.0	2.38	2.55	2.40	2.36	2.32	2.27	2.23	2.19	2.15	2.11	2.06	2.02
53.5	2.41	2.58	2.43	2.39	2.35	2.31	2.27	2.22	2.18	2.14	2.10	2.06
54.0	2.45	2.62	2.47	2.43	2.38	2.34	2.30	2.26	2.22	2.17	2.13	2.09
54.5	2.48	2.65	2.50	2.46	2.42	2.38	2.33	2.29	2.25	2.21	2.17	2.12
55.0	2.51	2.68	2.54	2.49	2.45	2.41	2.37	2.33	2.28	2.24	2.20	2.16
55.5	2.55	2.72	2.57	2.53	2.49	2.45	2.40	2.36	2.32	2.28	2.24	2.19
56.0	2.58	2.75	2.61	2.56	2.52	2.48	2.44	2.40	2.35	2.31	2.27	2.23
56.5	2.62	2.79	2.64	2.60	2.56	2.51	2.47	2.43	2.39	2.35	2.30	2.26
57.0	2.65	2.82	2.67	2.63	2.59	2.55	2.51	2.46	2.42	2.38	2.34	2.30
57.5	2.69	2.86	2.71	2.67	2.62	2.58	2.54	2.50	2.46	2.41	2.37	2.33
58.0	2.72	2.89	2.74	2.70	2.66	2.62	2.57	2.53	2.49	2.45	2.41	2.36
58.5	2.75	2.92	2.78	2.73	2.69	2.65	2.61	2.57	2.52	2.48	2.44	2.40
59.0	2.79	2.96	2.81	2.77	2.73	2.69	2.64	2.60	2.56	2.52	2.48	2.43
59.5	2.82	2.99	2.85	2.80	2.76	2.72	2.68	2.64	2.59	2.55	2.51	2.47
60.0	2.86	3.03	2.88	2.84	2.80	2.75	2.71	2.67	2.63	2.59	2.54	2.50
60.5	2.89	3.06	2.91	2.87	2.83	2.79	2.75	2.70	2.66	2.62	2.58	2.54
61.0	2.93	3.10	2.95	2.91	2.86	2.82	2.78	2.74	2.70	2.65	2.61	2.57
61.5	2.96	3.13	2.98	2.94	2.90	2.86	2.81	2.77	2.73	2.69	2.65	2.60
62.0	2.99	3.16	3.02	2.97	2.93	2.89	2.85	2.81	2.76	2.72	2.68	2.64
62.5	3.03	3.20	3.05	3.01	2.97	2.93	2.88	2.84	2.80	2.76	2.72	2.67
63.0	3.06	3.23	3.09	3.04	3.00	2.96	2.92	2.88	2.83	2.79	2.75	2.71
63.5	3.10	3.27	3.12	3.08	3.04	2.99	2.95	2.91	2.87	2.83	2.78	2.74
64.0	3.13	3.30	3.15	3.11	3.07	3.03	2.99	2.94	2.90	2.86	2.82	2.78
64.5	3.17	3.34	3.19	3.15	3.10	3.06	3.02	2.98	2.94	2.89	2.85	2.81
65.0	3.20	3.37	3.22	3.18	3.14	3.10	3.05	3.01	2.97	2.93	2.89	2.84
65.5	3.23	3.40	3.26	3.21	3.17	3.13	3.09	3.05	3.00	2.96	2.92	2.88
66.0	3.27	3.44	3.29	3.25	3.21	3.17	3.12	3.08	3.04	3.00	2.96	2.91
66.5	3.30	3.47	3.33	3.28	3.24	3.20	3.16	3.12	3.07	3.03	2.99	2.95
67.0	3.34	3.51	3.36	3.32	3.28	3.23	3.19	3.15	3.11	3.07	3.02	2.98
67.5	3.37	3.54	3.39	3.35	3.31	3.27	3.23	3.18	3.14	3.10	3.06	3.02
68.0	3.41	3.58	3.43	3.39	3.34	3.30	3.26	3.22	3.18	3.13	3.09	3.05
68.5	3.44	3.61	3.46	3.42	3.38	3.34	3.29	3.25	3.21	3.17	3.13	3.08
69.0	3.47	3.64	3.50	3.46	3.41	3.37	3.33	3.29	3.25	3.20	3.16	3.12
69.5	3.51	3.68	3.53	3.49	3.45	3.41	3.36	3.32	3.28	3.24	3.20	3.15
70.0	3.54	3.71	3.57	3.52	3.48	3.44	3.40	3.36	3.31	3.27	3.23	3.19
70.5	3.58	3.75	3.60	3.56	3.52	3.47	3.43	3.39	3.35	3.31	3.26	3.22
71.0	3.61	3.78	3.63	3.59	3.55	3.51	3.47	3.42	3.38	3.34	3.30	3.26
71.5	3.65	3.82	3.67	3.63	3.58	3.54	3.50	3.46	3.42	3.37	3.33	3.29
72.0	3.68	3.85	3.70	3.66	3.62	3.58	3.53	3.49	3.45	3.41	3.37	3.32
72.5	3.71	3.88	3.74	3.70	3.65	3.61	3.57	3.53	3.49	3.44	3.40	3.36
73.0	3.75	3.92	3.77	3.73	3.69	3.65	3.60	3.56	3.52	3.48	3.44	3.39
73.5	3.78	3.95	3.81	3.76	3.72	3.68	3.64	3.60	3.55	3.51	3.47	3.43
74.0	3.82	3.99	3.84	3.80	3.76	3.71	3.67	3.63	3.59	3.55	3.50	3.46
74.5	3.85	4.02	3.87	3.83	3.79	3.75	3.71	3.66	3.62	3.58	3.54	3.50
75.0	3.89	4.06	3.91	3.87	3.82	3.78	3.74	3.70	3.66	3.61	3.57	3.53
75.5	3.92	4.09	3.94	3.90	3.86	3.82	3.77	3.73	3.69	3.65	3.61	3.56
76.0	3.95	4.12	3.98	3.94	3.89	3.85	3.81	3.77	3.73	3.68	3.64	3.60
76.5	3.99	4.16	4.01	3.97	3.93	3.89	3.84	3.80	3.76	3.72	3.68	3.63
77.0	4.02	4.19	4.05	4.00	3.96	3.92	3.88	3.84	3.79	3.75	3.71	3.67

	AGE												
HT	41	43	45	47	49	51	53	55	57	59	61	63	65
52.0	1.91	1.87	1.83	1.79	1.74	1.70	1.66	1.62	1.58	1.53	1.49	1.45	1.41
52.5	1.95	1.90	1.86	1.82	1.78	1.74	1.69	1.65	1.61	1.57	1.53	1.48	1.44
53.0	1.98	1.94	1.90	1.85	1.81	1.77	1.73	1.69	1.64	1.60	1.56	1.52	1.48
53.5	2.01	1.97	1.93	1.89	1.85	1.80	1.76	1.72	1.68	1.64	1.59	1.55	1.51
54.0	2.05	2.01	1.96	1.92	1.88	1.84	1.80	1.75	1.71	1.67	1.63	1.59	1.54
54.5	2.08	2.04	2.00	1.96	1.91	1.87	1.83	1.79	1.75	1.70	1.66	1.62	1.58
55.0	2.12	2.07	2.03	1.99	1.95	1.91	1.86	1.82	1.78	1.74	1.70	1.65	1.61
55.5	2.15	2.11	2.07	2.03	1.98	1.94	1.90	1.86	1.82	1.77	1.73	1.69	1.65
56.0	2.19	2.14	2.10	2.06	2.02	1.98	1.93	1.89	1.85	1.81	1.77	1.72	1.68
56.5	2.22	2.18	2.14	2.09	2.05	2.01	1.97	1.93	1.88	1.84	1.80	1.76	1.72
57.0	2.25	2.21	2.17	2.13	2.09	2.04	2.00	1.96	1.92	1.88	1.83	1.79	1.75
57.5	2.29	2.25	2.20	2.16	2.12	2.08	2.04	1.99	1.95	1.91	1.87	1.83	1.78
58.0	2.32	2.28	2.24	2.20	2.15	2.11	2.07	2.03	1.99	1.94	1.90	1.86	1.82
58.5	2.36	2.31	2.27	2.23	2.19	2.15	2.10	2.06	2.02	1.98	1.94	1.89	1.85
59.0	2.39	2.35	2.31	2.27	2.22	2.18	2.14	2.10	2.06	2.01	1.97	1.93	1.89
59.5	2.43	2.38	2.34	2.30	2.26	2.22	2.17	2.13	2.09	2.05	2.01	1.96	1.92
60.0	2.46	2.42	2.38	2.33	2.29	2.25	2.21	2.17	2.12	2.08	2.04	2.00	1.96
60.5	2.49	2.45	2.41	2.37	2.33	2.28	2.24	2.20	2.16	2.12	2.07	2.03	1.99
61.0	2.53	2.49	2.44	2.40	2.36	2.32	2.28	2.23	2.19	2.15	2.11	2.07	2.02
61.5	2.56	2.52	2.48	2.44	2.39	2.35	2.31	2.27	2.23	2.18	2.14	2.10	2.06
62.0	2.60	2.55	2.51	2.47	2.43	2.39	2.34	2.30	2.26	2.22	2.18	2.13	2.09
62.5	2.63	2.59	2.55	2.51	2.46	2.42	2.38	2.34	2.30	2.25	2.21	2.17	2.13
63.0	2.67	2.62	2.58	2.54	2.50	2.46	2.41	2.37	2.33	2.29	2.25	2.20	2.16
63.5	2.70	2.66	2.62	2.57	2.53	2.49	2.45	2.41	2.36	2.32	2.28	2.24	2.20
64.0	2.73	2.69	2.65	2.61	2.57	2.52	2.48	2.44	2.40	2.36	2.31	2.27	2.23
64.5	2.77	2.73	2.68	2.64	2.60	2.56	2.52	2.47	2.43	2.39	2.35	2.31	2.26
65.0	2.80	2.76	2.72	2.68	2.63	2.59	2.55	2.51	2.47	2.42	2.38	2.34	2.30
65.5	2.84	2.79	2.75	2.71	2.67	2.63	2.58	2.54	2.50	2.46	2.42	2.37	2.33
66.0	2.87	2.83	2.79	2.75	2.70	2.66	2.62	2.58	2.54	2.49	2.45	2.41	2.37
66.5	2.91	2.86	2.82	2.78	2.74	2.70	2.65	2.61	2.57	2.53	2.49	2.44	2.40
67.0	2.94	2.90	2.86	2.81	2.77	2.73	2.69	2.65	2.60	2.56	2.52	2.48	2.44
67.5	2.97	2.94	2.89	2.85	2.81	2.76	2.72	2.68	2.64	2.60	2.55	2.51	2.47
68.0	3.01	2.97	2.92	2.88	2.84	2.80	2.76	2.71	2.67	2.63	2.59	2.55	2.50
68.5	3.04	3.00	2.96	2.92	2.87	2.83	2.79	2.75	2.71	2.66	2.62	2.58	2.54
69.0	3.08	3.04	2.99	2.95	2.91	2.87	2.83	2.78	2.74	2.70	2.66	2.62	2.57
69.5	3.11	3.07	3.03	2.99	2.94	2.90	2.86	2.82	2.78	2.73	2.69	2.65	2.61
70.0	3.15	3.10	3.06	3.02	2.98	2.94	2.89	2.85	2.81	2.77	2.73	2.68	2.64
70.5	3.18	3.14	3.10	3.05	3.01	2.97	2.93	2.89	2.84	2.80	2.76	2.72	2.68
71.0	3.21	3.17	3.13	3.09	3.05	3.00	2.96	2.92	2.88	2.84	2.79	2.75	2.71
71.5	3.25	3.21	3.16	3.12	3.08	3.04	3.00	2.95	2.91	2.87	2.83	2.79	2.74
72.0	3.28	3.24	3.20	3.16	3.11	3.07	3.03	2.99	2.95	2.90	2.86	2.82	2.78
72.5	3.32	3.28	3.23	3.19	3.15	3.11	3.07	3.02	2.98	2.94	2.90	2.86	2.81
73.0	3.35	3.31	3.27	3.23	3.18	3.14	3.10	3.06	3.02	2.97	2.93	2.89	2.85
73.5	3.39	3.34	3.30	3.26	3.22	3.18	3.13	3.09	3.05	3.01	2.97	2.92	2.88
74.0	3.42	3.38	3.34	3.29	3.25	3.21	3.17	3.13	3.08	3.04	3.00	2.96	2.92
74.5	3.45	3.41	3.37	3.33	3.29	3.24	3.20	3.16	3.12	3.08	3.03	2.99	2.95
75.0	3.49	3.45	3.40	3.36	3.32	3.28	3.24	3.19	3.15	3.11	3.07	3.03	2.98
75.5	3.52	3.48	3.44	3.40	3.35	3.31	3.27	3.23	3.19	3.14	3.10	3.06	3.02
76.0	3.56	3.52	3.47	3.43	3.39	3.35	3.31	3.26	3.22	3.18	3.14	3.10	3.05
76.5	3.59	3.55	3.51	3.47	3.42	3.38	3.34	3.30	3.26	3.21	3.17	3.13	3.09
77.0	3.63	3.58	3.54	3.50	3.46	3.42	3.37	3.33	3.29	3.25	3.21	3.16	3.12

WAC 296-62-14541 Appendix D--Pulmonary function standards for cotton dust standard.

The spirometric measurements of pulmonary function must conform to the following minimum standards, and these standards are not intended to preclude additional testing or alternate methods which can be determined to be superior.

(1) **Apparatus**.

(a) The instrument must be accurate to within ±50 milliliters or within ±3 percent of reading, whichever is greater.

(b) The instrument should be capable of measuring vital capacity from 0 to 7 liters BTPS.

(c) The instrument must have a low inertia and offer low resistance to airflow such that the resistance to airflow at 12 liters per second must be less than 1.5 cm. H_2O/liter/sec.

(d) The zero time point for the purpose of timing the FEV_1 must be determined by extrapolating the steepest portion of the volume time curve back to the maximal inspiration volume (1, 2, 3, 4) or by an equivalent method.

(e) Instruments incorporating measurements of airflow to determine volume must conform to the same volume accuracy stated in (a) of this subsection when presented with flow rates from at least 0 to 12 liters per second.

(f) The instrument or user of the instrument must have means of correcting volumes to a body temperature saturated with water vapor (BTPS) under conditions of varying ambient spirometer temperatures and barometric pressures.

(g) The instrument used must provide a tracing or display of either flow versus volume or volume versus time during the entire forced expiration. A tracing or display is necessary to determine whether the patient has performed the test properly. The tracing must be stored and available for recall and must be of sufficient size that hand measurements may be made within requirement of (a) of this subsection. If a paper record is made it must have a paper speed of at least 2 cm/sec and a volume sensitivity of at least 10.0 mm of chart per liter of volume.

(h) The instrument must be capable of accumulating volume for a minimum of ten seconds and shall not stop accumulating volume before (i) the volume change for a 0.5 second interval is less than 25 milliliters or (ii) the flow is less than 50 milliliters per second for a 0.5 second interval.

(i) The forced vital capacity (FVC) and forced expiratory volume in l second $FEV_{1.0}$ measurements must comply with the accuracy requirements stated in (a) of this subsection. That is, they should be accurately measured to within ± 50 ml or within ±3 percent of reading, whichever is greater.

(j) The instrument must be capable of being calibrated in the field with respect to the FEV_1 and FVC. This calibration of the FEV_1 and FVC may be either directly or indirectly through volume and time base measurements. The volume calibration source should provide a volume displacement of at least 2 liters and should be accurate to within ±30 milliliters.

(2) **Technique for measurement of forced vital capacity maneuver.**

(a) Use of a nose clip is recommended but not required. The procedures must be explained in simple terms to the patient who must be instructed to loosen any tight clothing and stand in front of the apparatus. The subject may sit, but care should be taken on repeat testing that same position be used and, if possible, the same spirometer. Particular attention must be given to insure that the chin is slightly elevated with the neck slightly extended. The patient must be instructed to make a full inspiration from a normal breathing pattern and then blow into the apparatus, without interruption, as hard, fast, and completely as possible. At least three forced expirations must be carried out. During the maneuvers, the patient must be observed for compliance with instructions. The expirations must be checked visually for reproducibility from flow-volume or volume-time tracings or displays. The following efforts must be judged unacceptable when the patient:

(i) Has not reached full inspiration preceding the forced expiration,

(ii) Has not used maximal effort during the entire forced expiration,

(iii) Has not continued the expiration for at least 5 seconds or until an obvious plateau in the volume time curve has occurred,

(iv) Has coughed or closed his glottis,

(v) Has an obstructed mouthpiece or a leak around the mouthpiece (obstruction due to tongue being placed in front of mouthpiece, false teeth falling in front of mouthpiece, etc.),

(vi) Has an unsatisfactory start of expiration, one characterized by excessive hesitation (or false starts), and therefore not allowing back extrapolation of time 0 (extrapolated volume on the volume time tracing must be less than 10 percent of the FVC),

(vii) Has an excessive variability between the three acceptable curves. The variation between the two largest FVC's and $FEV_{1's}$ of the three satisfactory tracings should not exceed 10 percent or ±100 milliliters, whichever is greater.

(b) Periodic and routine recalibration of the instrument or method for recording FVC and $FEV_{1.0}$ should be performed using a syringe or other volume source of at least 2 liters.

(3) **Interpretation of spirogram**.

(a) The first step in evaluating a spirogram should be to determine whether or not the patient has performed the test properly or as described in subsection (2) of this section. From the three satisfactory tracings, the forced vital capacity (FVC) and forced expiratory volume in 1 second ($FEV_{1.0}$) must be measured and recorded. The largest observed FVC and largest observed $FEV_{1.0}$ must be used in the analysis regardless of the curve(s) on which they occur.

(b) The following guidelines are recommended by NIOSH for the evaluation and management of workers exposed to cotton dust. It is important to note that employees who show reductions in FEV_1/FVC ratio below .75 or drops in Monday FEV_1 of 5 percent or greater on their initial screening exam, should be reevaluated within a month of the first exam. Those who show consistent decrease in lung function, as shown on the following table, should be managed as recommended.

(4) **Qualifications of personnel administering the test**.

Technicians who perform pulmonary function testing should have the basic knowledge required to produce meaningful results. Training consisting of approximately 16 hours of formal instruction should cover the following areas.

(a) Basic physiology of the forced vital capacity maneuver and the determinants of airflow limitation with emphasis on the relation to reproducibility of results.

(b) Instrumentation requirements including calibration procedures, sources of error and their correction.

(c) Performance of the testing including subject coaching, recognition of improperly performed maneuvers and corrective actions.

(d) Data quality with emphasis on reproducibility.

(e) Actual use of the equipment under supervised conditions.

(f) Measurement of tracings and calculations of results.

WAC 296-62-14543 Appendix E--Vertical elutriator equivalency protocol.

(a) Samples to be taken--In order to ascertain equivalency, it is necessary to collect a total of 100 samples from at least 10 sites in a mill. That is, there should be 10 replicate readings at each of 10 sites. The sites should represent dust levels which vary over the allowable range of 0.5 to 2 times the permissible exposure limit. Each sample requires the use of two vertical elutriators (VE's) and at least one but not more than two alternative devices (AD's). Thus, the end result is 200 VE readings and either 100 or 200 AD readings. The 2 VE readings and the 1 or 2 AD readings at each time and site must be made simultaneously. That is, the two VE's and one or two AD's must be arranged together in such a way that they are measuring essentially the same dust levels.

(b) Data averaging--The two VE readings taken at each site are then averaged. These averages are to be used as the 100 VE readings. If two alternate devices were used, their test results are also averaged. Thus, after this step is accomplished, there will be 100 VE readings and 100 AD readings.

(c) Differences--For each of the 100 sets of measurements (VE and AD) the difference is obtained as the average VE reading minus the AD reading. Call these differences Di. Thus, we have.

$$\mathbf{Di = VEi - ADi,\ i = 1,2, \ldots ,100 \quad (1)}$$

Next we compute the arithmetic mean and standard deviations of the differences, using equations (2) and (3), respectively.

$$S_D = \sqrt{\sum D_i^2 - \frac{\left(\sum D_i\right)^2}{N}} \quad (3)$$

where N equals the number of differences (100 in this case).
$\overline{X}_D$ is the arithmetic mean and S_D is the standard deviation.

We next calculate the critical value as $T = KS_D + \left|\overline{X}_D\right|$
where X = 1.87, based on 100 samples.

$$\overline{X_D} - \frac{1}{N}\sum_{i=1}^{N} D_i \quad (2)$$

(d) Equivalency test. The next step is to obtain the average of the 100 VE readings. This is obtained by equation (4)

$$X_{VE} = \frac{1}{N}\left(\sum_{i=1}^{N} VE_i\right) \quad (4)$$

We next multiply 0.25 by $\overline{X}_{VE}$. If $T < 0.25\ \overline{X}_{VE}$, we can say that the alternate device has passed the equivalency test.

PART O
COKE OVENS

WAC **Page**

WAC 296-62-200 Coke oven emissions. Scope and Application. 1

WAC 296-62-20001 Definitions. 1

WAC 296-62-20003 Exposure limits. 2

WAC 296-62-20005 Regulated areas. 2

WAC 296-62-20007 Exposure monitoring and measurement. 2

WAC 296-62-20009 Methods of compliance. 3

WAC 296-62-20011 Respiratory protection. 10

WAC 296-62-20013 Protective clothing and equipment. 10

WAC 296-62-20015 Hygiene facilities and practices. 11

WAC 296-62-20017 Medical surveillance. 12

WAC 296-62-20019 Information and training. 14

WAC 296-62-20021 Communication of hazards. 14

WAC 296-62-20023 Recordkeeping. 15

WAC 296-62-20025 Observation of monitoring. 17

WAC 296-62-20027 Appendix A--Coke oven emissions substance information sheet. 17

WAC 296-62-20029 Appendix B--Industrial hygiene and medical surveillance guidelines. 19

WAC 296-62-200 Coke oven emissions. Scope and application.

This section applies to the control of employee exposure to coke oven emissions.

WAC 296-62-20001 Definitions.

For the purpose of this section:

Authorized person. Any person specifically authorized by the employer whose duties require the person to enter a regulated area, or any person entering such an area as a designated representative of employees for the purpose of exercising the opportunity to observe monitoring and measuring procedures under WAC 296-62-20025.

Beehive oven. A coke oven in which the products of carbonization other than coke are not recovered, but are released into the ambient air.

Coke oven. A retort in which coke is produced by the destructive distillation or carbonization of coal.

Coke oven battery. A structure containing a number of slot-type coke ovens.

Coke oven emissions. The benzenesoluble fraction of total particulate matter present during the destructive distillation or carbonization of coal for the production of coke.

Director. The director of the department of labor and industries or their authorized representative.

Emergency. Any occurrence such as, but not limited to, equipment failure which is likely to, or does, result in any massive release of coke oven emissions.

Existing coke oven battery. A battery in operation or under construction on January 20, 1977, and which is not rehabilitated.

Green push. Coke which when removed from the oven results in emissions due to the presence of unvolatized coal.

Pipeline charging. Any apparatus used to introduce coal into an oven which uses a pipe or duct permanently mounted onto an oven and through which coal is charged.

Rehabilitated coke oven battery. A battery which is rebuilt, overhauled, renovated, or restored such as from the pad up, after January 20, 1977.

Sequential charging. A procedure, usually automatically timed, by which a predetermined volume of coal in each larry car hopper is introduced into an oven such that no more than two hoppers commence or finish discharging simultaneously although, at some point, all hoppers are discharging simultaneously.

Stage charging. A procedure by which a predetermined volume of coal in each larry car hopper is introduced into an oven such that no more than two hoppers are discharging simultaneously.

WAC 296-62-20003 Permissible exposure limit.

The employer must ensure that no employee is exposed to coke oven emissions at concentrations greater than 150 micrograms per cubic meter of air (150 $\mu g/m^3$), averaged over any 8-hour period.

WAC 296-62-20005 Regulated areas.

(1) The employer must establish regulated areas and must limit access to them to authorized persons.

(2) The employer must establish the following as regulated areas:

(a) The coke oven battery including topside and its machinery, pushside and its machinery, coke side and its machinery, and the battery ends; the wharf; and the screening station;

(b) The beehive oven and its machinery.

WAC 296-62-20007 Exposure monitoring and measurement.

(1) **Monitoring program**.

(a) Each employer who has a place of employment where coke oven emissions are present must monitor employees employed in the regulated area to measure their exposure to coke oven emissions.

(b) The employer must obtain measurements which are representative of each employee's exposure to coke oven emissions over an eight-hour period. All measurements must determine exposure without regard to the use of respiratory protection.

(c) The employer must collect full-shift (for at least seven continuous hours) personal samples, including at least one sample during each shift for each battery and each job classification within the regulated areas including at least the following job classifications:

(i) Lidman;

(ii) Tar chaser;

(iii) Larry car operator;

(iv) Luterman;

(v) Machine operator, coke side;

(vi) Benchman, coke side;

(vii) Benchman, pusher side;

(viii) Heater;

(ix) Quenching car operator;

(x) Pusher machine operator;

(xi) Screening station operator;

(xii) Wharfman;

(xiii) Oven patcher;

(xiv) Oven repairman;

(xv) Spellman; and

(xvi) Maintenance personnel.

(d) The employer must repeat the monitoring and measurements required by subsection (1) of this section at least every three months.

(2) **Redetermination**. Whenever there has been a production, process, or control change which may result in new or additional exposure to coke oven emissions, or whenever the employer has any other reason to suspect an increase in employee exposure, the employer must repeat the monitoring and measurements required by subsection (1) of this section for those employees affected by such change or increase.

(3) **Employee notification**.

(a) The employer must notify each employee in writing of the exposure measurements which represent that employee's exposure within five working days after the receipt of the results of measurements required by subsection (1) and (2) of this section.

(b) Whenever such results indicate that the representative employee exposure exceeds the permissible exposure limit, the employer must, in such notification, inform each employee of that fact and of the corrective action being taken to reduce exposure to or below the permissible exposure limit.

(4) **Accuracy of measurement**. The employer must use a method of monitoring and measurement which has an accuracy (with a confidence level of 95%) of not less than plus or minus 35% for concentrations of coke oven emissions greater than or equal to 150 µg /m^3.

WAC 296-62-20009 Methods of compliance.

The employer must control employee exposure to coke oven emissions by the use of engineer controls, work practices and respiratory protection as follows:

(1) **Priority of compliance methods.**

(a) Existing coke oven batteries.

(i) The employer must institute the engineer and work practice controls listed in subsections (2), (3) and (4) of this section in existing coke oven batteries at the earliest possible time, but not later than January 20, 1980, except to the extent that the employer can establish that such controls are not feasible. In determining the earliest possible time for institution of engineer and work practice controls, the requirement, effective August 27, 1971, to implement feasible administrative or engineer controls to reduce exposures to coal tar pitch volatiles, must be considered. Wherever the engineer and work practice controls which can be instituted are not sufficient to reduce employee exposures to or below the permissible exposure limit, the employer must nonetheless use them to reduce exposures to the lowest level achievable by these controls and must supplement them by the use of respiratory protection which complies with the requirements of WAC 296-62-20011.

(ii) The engineer and work practice controls required under subsections (2), (3) and (4) of this section are minimum requirements generally applicable to all existing coke oven batteries. If, after implementing all controls required by subsections (2), (3) and (4) of this section, or after January 20, 1980, whichever is sooner, employee exposures still exceed the permissible exposure limit, employers must implement any other engineer and work practice controls necessary to reduce exposure to or below the permissible exposure limit except to the extent that the employer can establish that such controls are not feasible. Whenever the engineer and work practice controls which can be instituted are not sufficient to reduce employee exposures to or below the permissible exposure limit, the employer must nonetheless use them to reduce exposures to the lowest level achievable by these controls and must supplement them by the use of respiratory protection which complies with the requirements of WAC 296-62-20011.

(b) New or rehabilitated coke oven batteries.

(i) The employer must institute the best available engineer and work practice controls on all new or rehabilitated coke oven batteries to reduce and maintain employee exposures at or below the permissible exposure limit, except to the extent that the employer can establish that such controls are not feasible. Wherever the engineer and work practice controls which can be instituted are not sufficient to reduce employee exposures to or below the permissible exposure limit, the employer must nonetheless use them to reduce exposures to the lowest level achievable by these controls and must supplement them by the use of respiratory protection which complies with the requirements of WAC 296-62-20011.

(ii) If, after implementing all the engineer and work practice controls required by (b)(i) of this subsection, employee exposures still exceed the permissible exposure limit, the employer must implement any other engineer and work practice controls necessary to reduce exposure to or below the permissible exposure limit except to the extent that the employer can establish that such controls are not feasible.

Wherever the engineer and work practice controls which can be instituted are not sufficient to reduce employee exposures to or below the permissible exposure limit, the employer must nonetheless use them to reduce exposures to the lowest level achievable by these controls and must supplement them by the use of respiratory protection which complies with the requirements of WAC 296-62-20011.

(c) Beehive ovens.

(i) The employer must institute engineer and work practice controls on all beehive ovens at the earliest possible time to reduce and maintain employee exposures at or below the permissible exposure limit, except to the extent that the employer can establish that such controls are not feasible.

In determining the earliest possible time for institution of engineer and work practice controls, the requirement, effective August 27, 1971, to implement feasible administrative or engineer controls to reduce exposures to coal tar pitch volatiles, must be considered. Wherever the engineer and work practice controls which can be instituted are not sufficient to reduce employee exposures to or below the permissible exposure limit, the employer must nonetheless use them to reduce exposures to the lowest level achievable by these controls and must supplement them by the use of respiratory protection which complies with the requirements of WAC 296-62-20011.

(ii) If, after implementing all engineer and work practice controls required by (c)(i) of this subsection, employee exposures still exceed the permissible exposure limit, the employer must implement any other engineer and work practice controls necessary to reduce exposures to or below the permissible exposure limit except to the extent that the employer can establish that such controls are not feasible. Whenever the engineer and work practice controls which can be instituted are not sufficient to reduce employee exposures to or below the permissible exposure limit, the employer must nonetheless use them to reduce exposures to the lowest level achievable by these controls and must supplement them by the use of respiratory protection which complies with the requirements of WAC 296-62-20011.

(2) **Engineer controls**.

(a) Charging. The employer must equip and operate existing coke oven batteries with all of the following engineer controls to control coke oven emissions during charging operations:

(i) One of the following methods of charging:

(A) Stage charging as described in subsection (3)(a)(ii) of this section; or

(B) Sequential charging as described in subsection (3)(a)(ii) of this section except that subsection (3)(a)(ii) and (3)(d) of this section does not apply to sequential charging; or

(C) Pipeline charging or other forms of enclosed charging in accordance with (a) of this subsection, except (a)(ii), (iv), (v), (vi) and (viii) of this subsection do not apply.

(ii) Drafting from two or more points in the oven being charged, through the use of double collector mains, or a fixed or moveable jumper pipe system to another oven, to effectively remove the gases from the oven to the collector mains;

(iii) Aspiration systems designed and operated to provide sufficient negative pressure and flow volume to effectively move the gases evolved during charging into the collector mains, including sufficient steam pressure, and steam jets of sufficient diameter;

(iv) Mechanical volumetric controls on each larry car hopper to provide the proper amount of coal to be charged through each charging hole so that the tunnel head will be sufficient to permit the gases to move from the oven into the collector mains;

(v) Devices to facilitate the rapid and continuous flow of coal into the oven being charged, such as stainless steel liners, coal vibrators or pneumatic shells;

(vi) Individually operated larry car drop sleeves and slide gates designed and maintained so that the gases are effectively removed from the oven into the collector mains;

(vii) Mechanized gooseneck and standpipe cleaners;

(viii) Air seals on the pusher machine leveler bars to control air infiltration during charging; and

(ix) Roof carbon cutters or a compressed air system or both on the pusher machine rams to remove roof carbon.

(b) Coking. The employer must equip and operate existing coke oven batteries with all of the following engineer controls to control coke oven emissions during coking operations:

(i) A pressure control system on each battery to obtain uniform collector main pressure;

(ii) Ready access to door repair facilities capable of prompt and efficient repair of doors, door sealing edges and all door parts;

(iii) An adequate number of spare doors available for replacement purposes;

(iv) Chuck door gaskets to control chuck door emissions until such door is repaired, or replaced; and

(v) Heat shields on door machines.

(3) **Work practice controls**.

(a) Charging. The employer must operate existing coke oven batteries with all of the following work practices to control coke oven emissions during the charging operation:

(i) Establishment and implementation of a detailed, written inspection and cleaning procedure for each battery consisting of at least the following elements:

(A) Prompt and effective repair or replacement of all engineer controls;

(B) Inspection and cleaning of goosenecks and standpipes prior to each charge to a specified minimum diameter sufficient to effectively move the evolved gases from the oven to the collector mains;

(C) Inspection for roof carbon build-up prior to each charge and removal of roof carbon as necessary to provide an adequate gas channel so that the gases are effectively moved from the oven into the collector mains;

(D) Inspection of the steam aspiration system prior to each charge so that sufficient pressure and volume is maintained to effectively move the gases from the oven to the collector mains;

(E) Inspection of steam nozzles and liquor sprays prior to each charge and cleaning as necessary so that the steam nozzles and liquor sprays are clean;

(F) Inspection of standpipe caps prior to each charge and cleaning and luting or both as necessary so that the gases are effectively moved from the oven to the collector mains; and

(G) Inspection of charging holes and lids for cracks, warpage and other defects prior to each charge and removal of carbon to prevent emissions, and application of luting material to standpipe and charging hole lids where necessary to obtain a proper seal.

(ii) Establishment and implementation of a detailed written charging procedure, designed and operated to eliminate emissions during charging for each battery, consisting of at least the following elements:

(A) Larry car hoppers filled with coal to a predetermined level in accordance with the mechanical volumetric controls required under subsection (2)(a)(iv) of this section so as to maintain a sufficient gas passage in the oven to be charged;

(B) The larry car aligned over the oven to be charged, so that the drop sleeves fit tightly over the charging holes; and

(C) The oven charged in accordance with the following sequence of requirements:

(I) The aspiration system turned on;

(II) Coal charged through the outermost hoppers, either individually or together, depending on the capacity of the aspiration system to collect the gases involved;

(III) The charging holes used under (a)(ii) and (b) of this subsection relidded or otherwise sealed off to prevent leakage of coke oven emissions;

(IV) If four hoppers are used, the third hopper discharged and relidded or otherwise sealed off to prevent leakage of coke oven emissions;

(V) The final hopper discharged until the gas channel at the top of the oven is blocked and then the chuck door opened and the coal leveled;

(VI) When the coal from the final hopper is discharged and the leveling operation complete, the charging hole relidded or otherwise sealed off to prevent leakage of coke oven emissions; and

(VII) The aspiration system turned off only after the charging holes have been closed.

(VIII) Establishment and implementation of a detailed written charging procedure, designed and operated to eliminate emissions during charging of each pipeline or enclosed charged battery.

(b) Coking. The employer must operate existing coke oven batteries pursuant to a detailed written procedure established and implemented for the control of coke oven emissions during coking, consisting of at least the following elements:

(i) Checking oven back pressure controls to maintain uniform pressure conditions in the collecting main;

(ii) Repair, replacement and adjustment of oven doors and check doors and replacement of door jambs so as to provide a continuous metal-to-metal fit;

(iii) Cleaning of oven doors, chuck doors and door jambs each coking cycle so as to provide an effective seal;

(iv) An inspection system and corrective action program to control door emissions to the maximum extent possible; and

(v) Luting of doors that are sealed by luting each coking cycle and reluting, replacing or adjusting as necessary to control leakage.

(c) Pushing. The employer must operate existing coke oven batteries with the following work practices to control coke oven emissions during pushing operations:

(i) Coke and coal spillage quenched as soon as practicable and not shoveled into a heated oven; and

(ii) A detailed written procedure for each battery established and implemented for the control of emissions during pushing consisting of the following elements:

(A) Dampering off the ovens and removal of charging hole lids to effectively control coke oven emissions during the push;

(B) Heating of the coal charge uniformly for a sufficient period so as to obtain proper coking including preventing green pushes;

(C) Prevention of green pushes to the maximum extent possible;

(D) Inspection, adjustment and correction of heating flue temperatures and defective flues at least weekly and after any green push, so as to prevent green pushes;

(E) Cleaning of heating flues and related equipment to prevent green pushes, at least weekly and after any green push.

(d) Maintenance and repair. The employer must operate existing coke oven batteries pursuant to a detailed written procedure of maintenance and repair established and implemented for the effective control of coke oven emissions consisting of the following elements:

(i) Regular inspection of all controls, including goosenecks, standpipes, standpipe caps, charging hole lids and castings, jumper pipes and air seals for cracks, misalignment or other defects and prompt implementation of the necessary repairs as soon as possible;

(ii) Maintaining the regulated area in a neat, orderly condition free of coal and coke spillage and debris;

(iii) Regular inspection of the damper system, aspiration system and collector main for cracks or leakage, and prompt implementation of the necessary repairs;

(iv) Regular inspection of the heating system and prompt implementation of the necessary repairs;

(v) Prevention of miscellaneous fugitive topside emissions;

(vi) Regular inspection and patching of over brickwork;

(vii) Maintenance of battery equipment and controls in good working order;

(viii) Maintenance and repair of coke oven doors, chuck doors, door jambs and seals; and

(ix) Repairs instituted and completed as soon as possible, including temporary repair measures instituted and completed where necessary, including but not limited to:

(A) Prevention of miscellaneous fugitive topside emissions; and

(B) Chuck door gaskets, which must be installed prior to the start of the next coking cycle.

(4) **Filtered air**.

(a) The employer must provide positive-pressure, temperature controlled filtered air for larry car, pusher machine, door machine, and quench car cabs.

(b) The employer must provide standby pulpits on the battery topside, at the wharf, and at the screening station, equipped with positive-pressure, temperature controlled filtered air.

(5) **Emergencies**. Whenever an emergency occurs, the next coking cycle may not begin until the cause of the emergency is determined and corrected, unless the employer can establish that it is necessary to initiate the next coking cycle in order to determine the cause of the emergency.

(6) **Compliance program**.

(a) Each employer must establish and implement a written program to reduce exposures solely by means of the engineer and work practice controls specified in subsections (2) through (4) of this section.

(b) The written program must include at least the following:

(i) A description of each coke oven operation by battery, including work force and operating crew, coking time, operating procedures and maintenance practices;

(ii) Engineer plans and other studies used to determine the controls for the coke battery;

(iii) A report of the technology considered in meeting the permissible exposure limit;

(iv) Monitoring data obtained in accordance with WAC 296-62-20007.

(v) A detailed schedule for the implementation of the engineer and work practice controls specified in subsections (2) through (4) of this section; and

(vi) Other relevant information.

(c) If, after implementing all controls required by subsections (2) through (4) of this section, or after January 20, 1980, whichever is sooner, or after completion of a new or rehabilitated battery the permissible exposure limit is still exceeded, the employer must develop a detailed written program and schedule for the implementation of any additional engineer controls and work practices necessary to reduce exposure to or below the permissible exposure limit.

(d) Written plans for such programs must be submitted, upon request, to the director, and must be available at the worksite for examination and copying by the director, and the authorized employee representative. The plans required under this subsection must be revised and updated at least every six months to reflect the current status of the program.

(7) **Training in compliance procedures**. The employer must incorporate all written procedures and schedules required under this section in the education and training program required under WAC 296-62-20019 and, where appropriate, post in the regulated area.

WAC 296-62-20011 Respiratory protection.

(1) **General**. For employees who use respirators required by this section, the employer must provide each employee with an appropriate respirator that complies with the requirements of this section. Compliance with the permissible exposure limit may not be achieved by the use of respirators except during:

(a) Periods necessary to install or implement feasible engineering and work-practice controls;

(b) Work operations, such as maintenance and repair activity, for which engineering and work-practice controls are technologically not feasible;

(c) Work operations for which feasible engineering and work-practice controls are not yet sufficient to reduce employee exposure to or below the permissible exposure limit;

(d) Emergencies.

(2) **Respirator program**. The employer must develop, implement and maintain a respiratory protection program as required by chapter 296-842 WAC, Respirators, which covers each employee required to use a respirator.

(3) **Respirator selection**. The employer must select and provide to employees appropriate respirators as specified in this section and WAC 296-842-13005 found in the respirator rule.

Although filtering facepiece respirators may be used for protection from coke oven particulate emissions, these respirators are not appropriate for use against gas or vapor contaminants that present an exposure hazard.

WAC 296-62-20013 Protective clothing and equipment.

(1) **Provision and Use**. The employer must provide and ensure the use of appropriate protective clothing and equipment, such as but not limited to:

(a) Flame resistant jacket and pants;

(b) Flame resistant gloves;

(c) Face shields or vented goggles which comply with WAC 296-800-160;

(d) Footwear providing insulation from hot surfaces;

(e) Safety shoes which comply with WAC 296-800-160; and

(f) Protective helmets which comply with WAC 296-800-160.

(2) **Cleaning and Replacement**.

(a) The employer must provide the protective clothing required by subsection (1)(a) and (b) of this section in a clean and dry condition at least weekly.

(b) The employer must clean, launder, or dispose of protective clothing required by subsections (1)(a) and (b) of this section.

(c) The employer must repair or replace the protective clothing and equipment as needed to maintain their effectiveness.

(d) The employer must ensure that all protective clothing is removed at the completion of a work shift only in change rooms prescribed in WAC 296-62-20015.

(e) The employer must ensure that contaminated protective clothing which is to be cleaned, laundered, or disposed of, is placed in a closed container in the changeroom.

(f) The employer must inform any person who cleans or launders protective clothing required by this section, of the potentially harmful effects of exposure to coke oven emissions.

WAC 296-62-20015 Hygiene facilities and practices.

(1) **Change rooms**. The employer must provide clean change rooms equipped with storage facilities for street clothes and separate storage facilities for protective clothing and equipment whenever employees are required to wear protective clothing and equipment in accordance with WAC 296-62-20013.

(2) **Showers**.

(a) The employer must ensure that employees working in the regulated area shower at the end of the work shift.

(b) The employer must provide shower facilities in accordance with WAC 296-800-230.

(3) **Lunchrooms**. The employer must provide lunchroom facilities which have a temperature controlled, positive pressure, filtered air supply, and which are readily accessible to employees working in the regulated area.

(4) **Lavatories**.

(a) The employer must ensure that employees working in the regulated area wash their hands and face prior to eating.

(b) The employer must provide lavatory facilities in accordance with WAC 296-800-230.

(5) **Prohibition of activities in the regulated area**.

(a) The employer must ensure that in the regulated area, food or beverages are not present or consumed, smoking products are not present or used, and cosmetics are not applied, except, that these activities may be conducted in the lunchrooms, change rooms and showers required under subsection 1 through 3 of this section.

(b) Drinking water may be consumed in the regulated area.

WAC 296-62-20017 Medical surveillance.

(1) **General requirements**.

(a) Each employer must institute a medical surveillance program for all employees who are employed in the regulated areas at least 30 days per year.

(b) This program must provide each employee covered under subsection (1)(a) of this section with an opportunity for medical examinations in accordance with this section.

(c) The employer must inform any employee who refuses any required medical examination of the possible health consequences of such refusal and shall obtain a signed statement from the employee indicating that the employee understands the risk involved in the refusal to be examined.

(d) The employer must ensure that all medical examinations and procedures are performed by or under the supervision of a licensed physician, and are provided without cost to the employee.

(2) **Initial examinations**. At the time of initial assignment to a regulated area or upon the institution of the medical surveillance program, the employer must provide a medical examination including at least the following elements:

(a) A work history and medical history which must include smoking history and the presence and degree of respiratory symptoms, such as breathlessness, cough, sputum production, and wheezing;

(b) A 14" x 17" posterior-anterior chest x-ray and International Labour Office UICC/Cincinnati (ILO U/C) rating;

(c) Pulmonary function tests including forced vital capacity (FVC) and forced expiratory volume at one second (FEV 1.0) with recording of type of equipment used;

(d) Weight;

(e) A skin examination;

(f) Urinalysis for sugar, albumin, and hematuria; and

(g) A urinary cytology examination.

(3) **Periodic examinations**.

(a) The employer must provide the examinations specified in subsections (2) (a) through (f) of this section at least annually for employees covered under subsection (1)(a) of this section.

(b) The employer must provide the examinations specified in subsection (2)(a) and (c) through (g) of this section at least semi-annually for employees 45 years of age or older or with five or more years employment in the regulated area.

(c) Whenever an employee who is 45 years of age or older or with five or more years employment in the regulated area transfers or is transferred from employment in a regulated area, the employer must continue to provide the examinations specified in subsection (2)(a) and (c) through (g) of this section semi-annually, as long as that employee is employed by the same employer or a successor employer.

(d) The employer must provide the x-ray specified in subsection (2)(b) of this section at least annually for employees covered under this subsection.

(e) Whenever an employee has not taken the examination specified in subsection (3)(a) through (c) of this section within the six months preceding the termination of employment, the employer must provide such examinations to the employee upon termination of employment.

(4) **Information provided to the physician**. The employer must provide the following information to the examining physician:

(a) A copy of this regulation and its Appendixes;

(b) A description of the affected employee's duties as they relate to the employee's exposure;

(c) The employee's exposure level or anticipated exposure level;

(d) A description of any personal protective equipment used or to be used; and

(e) Information from previous medical examinations of the affected employee which is not readily available to the examining physician.

(5) **Physician's written opinion**.

(a) The employer must obtain a written opinion from the examining physician which shall include:

(i) The results of the medical examinations;

(ii) The physician's opinion as to whether the employee has any detected medical conditions which would place the employee at increased risk of material impairment of the employee's health from exposure to coke oven emissions;

(iii) Any recommended limitations upon the employee's exposure to coke oven emissions or upon the use of protective clothing or equipment such as respirators; and

(iv) A statement that the employee has been informed by the physician of the results of the medical examination and any medical conditions which require further explanation or treatment.

(b) The employer must instruct the physician not to reveal in the written opinion specific findings or diagnoses unrelated to occupational exposure.

(c) The employer must provide a copy of the written opinion to the affected employee.

WAC 296-62-20019 Employee information and training.

(1) **Training program**.

(a) The employer must institute a training program for employees who are employed in the regulated area and shall assure their participation.

(b) The training program must be provided as of January 20, 1977, for employees who are employed in the regulated area at that time or at the time of initial assignment to a regulated area.

(c) The training program must be provided at least annually for all employees who are employed in the regulated area, except that training regarding the occupational safety and health hazards associated with exposure to coke oven emissions and the purpose, proper use, and limitations of respiratory protective devices must be provided at least quarterly until January 20, 1978.

(d) The training program must include informing each employee of:

(i) The information contained in the substance information sheet for coke oven emissions (Appendix A);

(ii) The purpose, proper use, and limitations of respiratory protective devices in addition to other information as required by chapter 296-842 WAC, see WAC 296-842-11005, 296-842-16005 and 296-842-19005.

(iii) The purpose for and a description of the medical surveillance program required by WAC 296-62-20017 including information on the occupational safety and health hazards associated with exposure to coke oven emissions;

(iv) A review of all written procedures and schedules required under WAC 296-62-20009; and

(v) A review of this standard.

(2) **Access to training materials**.

(a) The employer must make a copy of this standard and its appendixes readily available to all employees who are employed in the regulated area.

(b) The employer must provide all materials relating to the employee information and training program to the director.

WAC 296-62-20021 Communication of hazards.

(1) **Hazard communication-General.** The employer must include coke oven emissions in the program established to comply with the Hazard Communication Standard (HCS), WAC 296-901-140. The employer must ensure that each employee has access to labels on containers of chemical and substances associated with coke oven processes and to safety data sheets, and is trained in accordance with the provisions of HCS and WAC 296-62-20019. The employer must ensure that at least the following hazard is addressed: **Cancer.**

(2) **Signs**.

(a) The employer must post signs in the regulated area bearing the legends:

DANGER
COKE OVEN EMISSIONS
MAY CAUSE CANCER
DO NOT EAT, DRINK OR SMOKE
WEAR RESPIRATORY PROTECTION IN THIS AREA
AUTHORIZED PERSONNEL ONLY

(b) In addition, the employer must post signs in the areas where the permissible exposure limit is exceeded bearing the legend:

WEAR RESPIRATORY PROTECTION IN THIS AREA

(c) The employer must ensure that no statement appears on or near any sign required by this section which contradicts or detracts from the effects of the required sign.

(d) The employer must ensure that signs required by this subsection are illuminated and cleaned as necessary so that the legend is readily visible.

(3) **Labels**.

The employer must ensure that labels of contaminated protective clothing and equipment include the following information:

WAC 296-62-20023 Recordkeeping.

(1) **Exposure measurements.** The employer must establish and maintain an accurate record of all measurements taken to monitor employee exposure to coke oven emissions required in WAC 296-62-20007.

(a) This record must include:

(i) Name, social security number, and job classification of the employees monitored;

(ii) The date(s), number, duration and results of each of the samples taken, including a description of the sampling procedure used to determine representative employee exposure where applicable;

(iii) The type of respiratory protective devices worn, if any;

(iv) A description of the sampling and analytical methods used and evidence of their accuracy; and

(v) The environment variables that could affect the measurement of employee exposure.

(b) The employer must maintain this record for at least forty years or for the duration of employment plus twenty years, whichever is longer.

(2) **Medical surveillance.** The employer must establish and maintain an accurate record for each employee subject to medical surveillance as required by WAC 296-62-20017.

(a) The record must include:

(i) The name, social security number, and description of duties of the employee;

(ii) A copy of the physician's written opinion;

(iii) The signed statement of any refusal to take a medical examination under WAC 296-62-20017; and

(iv) Any employee medical complaints related to exposure to coke oven emissions.

(b) The employer must keep, or ensure that the examining physician keeps, the following medical records:

(i) A copy of the medical examination results including medical and work history required under WAC 296-62-20017;

(ii) A description of the laboratory procedures used and a copy of any standards or guidelines used to interpret the test results;

(iii) The initial x-ray;

(iv) The x-rays for the most recent 5 years;

(v) Any x-ray with a demonstrated abnormality and all subsequent x-rays;

(vi) The initial cytologic examination slide and written description;

(vii) The cytologic examination slide and written description for the most recent 10 years; and

(viii) Any cytologic examination slides with demonstrated atypia, if such atypia persists for 3 years, and all subsequent slides and written descriptions.

(c) The employer must maintain medical records required under subsection (2) of this section for at least 40 years, or for the duration of employment plus 20 years, whichever is longer.

(3) **Availability**.

(a) The employer must make available upon request all records required to be maintained by this section to the director for examination and copying.

(b) Employee exposure measurement records and employee medical records required by this subsection must be provided upon request to employees, designated representatives, and the assistant director in accordance with chapter 296-802 WAC.

(c) The employer must make available upon request employee medical records required to be maintained by subsection (2) of this section to a physician designated by the affected employee or former employee.

(4) **Transfer of records**.

(a) Whenever the employer ceases to do business, the successor employer must receive and retain all records required to be maintained by this section.

(b) The employer must also comply with any additional requirements involving transfer of records set forth in WAC 296-802-60005.

WAC 296-62-20025 Observation of monitoring.

(1) **Employee observation.** The employer must provide affected employees or their representatives an opportunity to observe any measuring or monitoring of employee exposure to coke oven emissions conducted pursuant to WAC 296-62-20007.

(2) **Observation procedures**.

(a) Whenever observation of the measuring or monitoring of employee exposure to coke oven emissions requires entry into an area where the use of protective clothing or equipment is required, the employer must provide the observer with and assure the use of such equipment and must require the observer to comply with all other applicable safety and health procedures.

(b) Without interfering with the measurement, observers shall be entitled to:

(i) An explanation of the measurement procedures;

(ii) Observe all steps related to the measurement of coke oven emissions performed at the place of exposure; and

(iii) Record the results obtained.

WAC 296-62-20027 Appendix A--Coke oven emissions substance information sheet.

APPENDIX A
COKE OVEN EMISSIONS
SUBSTANCE INFORMATION SHEET

I. SUBSTANCE IDENTIFICATION

(1) Substance: Coke oven emissions

(2) Definition: The benzene-soluble fraction of total particulate matter present during the destructive distillation or carbonization of coal for the production of coke.

(3) Permissible exposure limit: 150 micrograms per cubic meter of air determined as an average over an 8-hour period.

(4) Regulated areas: Only employees authorized by your employer should enter a regulated area. The employer is required to designate the following areas as regulated areas: the coke oven battery, including topside and its machinery, pushside and its machinery, and the screening station; and the wharf, the beehive ovens and machinery.

II. HEALTH HAZARD DATA

Exposure to coke oven emissions is a cause of lung cancer, and possibly kidney cancer, in humans. Although it does not have an excess number of skin cancer cases in humans, repeated skin contact with coke oven emissions should be avoided.

III. PROTECTIVE CLOTHING AND EQUIPMENT

(1) Respirators: Respirators will be provided by your employer for routine use if your employer is in the process of implementing engineering and work practice controls or where engineering and work practice controls are not feasible or insufficient. You must wear respirators for nonroutine activities or in emergency situations where you are likely to be exposed to levels of coke oven emissions in excess of the permissible exposure limit.

Since how well your respirator fits your face is very important, your employer is required to conduct fit tests to make sure the respirator seals properly when you wear it. These tests are simple and rapid and will be explained to you during your training sessions.

(2) Protective clothing: Your employer is required to provide, and you must wear, appropriate, clean, protective clothing and equipment to protect your body from repeated skin contact with coke oven emissions and from the heat generated during the coking process. This clothing should include such items as jacket and pants and flame resistant gloves. Protective equipment should include face shield or vented goggles, protective helmets and safety shoes, insulated from hot surfaces where appropriate.

IV. HYGIENE FACILITIES AND PRACTICES

You must not eat, drink, smoke, chew gum or tobacco, or apply cosmetics in the regulated area, except that drinking water is permitted. Your employer is required to provide lunchrooms and other areas for these purposes.

Your employer is required to provide showers, washing facilities, and change rooms. If you work in a regulated area, you must wash your face, and hands before eating. You must shower at the end of the work shift. Do not take used protective clothing out of the change rooms without your employer's permission. Your employer is required to provide for laundering or cleaning of your protective clothing.

V. SIGNS AND LABELS

Your employer is required to post warning signs and labels for your protection. Signs must be posted in regulated areas. The signs must warn that a cancer hazard is present, that only authorized employees may enter the area, and that no smoking or eating is allowed. In regulated areas where coke oven emissions are above the permissible exposure limit, the signs should also warn that respirators must be worn.

VI. MEDICAL EXAMINATIONS

If you work in a regulated area at least 30 days per year, your employer is required to provide you with a medical examination every year. The medical examination must include a medical history, a chest x-ray; pulmonary function test; weight comparison; skin examination; a urinalysis and a urine cytology exam for the early detection of urinary cancer. The urine cytology exam is only included in the initial exam until you are either forty-five years or older, or have five or more years employment in the regulated areas when the medical exams including this test, but excepting the x-ray exam, are to be given every six months; under these conditions, you are to be given an x-ray exam at least once a year. The examining physician will provide a written opinion to your employer containing the results of the medical exams. You should also receive a copy of this opinion.

VII. OBSERVATION OF MONITORING

Your employer is required to monitor your exposure to coke oven emissions and you are entitled to observe the monitoring procedure. You are entitled to receive an explanation of the measurement procedure, observe the steps taken in the measurement procedure, and to record the results obtained. When the monitoring procedure is taking place in an area where respirators or personal protective clothing and equipment are required to be worn, you must also be provided with and must wear the protective clothing and equipment.

VIII. ACCESS TO RECORDS

You or your representative are entitled to records of your exposure to coke oven emissions upon request to your employer. Your medical examination records can be furnished to your physician upon request to your employer.

IX. TRAINING AND EDUCATION

Additional information on all of these items plus training as to hazards of coke oven emissions and the engineering and work practice controls associated with your job will also be provided by your employer.

WAC 296-62-20029 Appendix B--Industrial hygiene and medical surveillance guidelines.

APPENDIX B
INDUSTRIAL HYGIENE AND MEDICAL SURVEILLANCE GUIDELINES

I. INDUSTRIAL HYGIENE GUIDELINES

(1) **Sampling**. (Benzene-Soluble Fraction Total Particulate Matter.)

Samples collected should be full shift (8-hour) samples. Sampling should be done using a personal sampling pump with pulsation damper at a flow rate of 2 liters per minute. Samples should be collected on 0.8 micrometer pore size silver membrane filters (37 mm diameter) preceded by Gelman glass fiber type A filters encased in three-piece plastic (polystyrene) field monitor cassettes. The cassette face cap should be on and the plug removed. The rotameter should be checked every hour to ensure that proper flow rates are maintained.

A minimum of three full-shift samples should be collected for each job classification on each battery, at least one from each shift. If disparate results are obtained for particular job classification, sampling should be repeated. It is advisable to sample each shift on more than one day to account for environmental variables (wind, precipitation, etc.) which may affect sampling. Differences in exposures among different work shifts may indicate a need to improve work practices on a particular shift. Sampling results from different shifts for each job classification should not be averaged. Multiple samples from same shift may be used to calculate an average exposure for a particular job classification.

(2) **Analysis**.

(a) All extraction glassware is cleaned with dichromic acid cleaning solution, rinsed with tap water, then deionized water, acetone, and allowed to dry completely. The glassware is rinsed with nanograde benzene before use. The Teflon cups are cleaned with benzene then with acetone.

(b) Pre-weigh the 2 ml Perkin-Elmer Teflon cups to one hundredth of a milligram on a Perkin-Elmer autobalance AD 2 Tare weight of the cups is about 50 mg.

(c) Place the silver membrane filter and glass fiber filter into a 15 ml test tube.

(d) Extract with 5 ml of benzene for five minutes in an ultrasonic cleaner.

(e) Filter the extract in 15 ml medium glass fritted funnels.

(f) Rinse test tube and filters with two 1.5 ml aliquots of benzene and filter through the fritted glass funnel.

(g) Collect the extract and two rinses in a 10 ml Kontes graduated evaporative concentrator.

(h) Evaporate down to a 1 ml while rinsing the sides with benzene.

(i) Pipet 0.5 ml into the Teflon cup and evaporate to dryness in a vacuum oven at 40ø C for 3 hours.

(j) Weight the Teflon cup and the weight gain is due to the benzene soluble residue in half the sample.

II. MEDICAL SURVEILLANCE GUIDELINES

(1) **General**.

The minimum requirements for the medical examination for coke oven workers are given in WAC 296-62-20017.

The initial examination is to be provided to all coke oven workers who work at least thirty days in the regulated area. The examination includes a 14" x 17" posterior-anterior chest x-ray and a ILO/UC rating to assure some standardization of x-ray reading, pulmonary function tests (FVC and FEV 1.0), weight, urinalysis, skin examination and a urinary cytologic examination. These tests are to serve as the baseline for comparing the employee's future test results. Periodic exams include all the elements of the initial exams, except that the urine cytologic test is to be performed only on those employees who are forty-five years of age or older or who have worked for five or more years in the regulated area; periodic exams, with the exception of x-rays, are to be performed semiannually for this group instead of annually; for this group, x-rays will continue to be given at least annually. The examination contents are minimum requirements, additional tests such as lateral and oblique x-rays or additional pulmonary function tests may be performed if deemed necessary.

(2) **Pulmonary function tests**.

Pulmonary function tests should be performed in a manner which minimizes subject and operator bias. There has been shown to be learning effects with regard to the results obtained from certain tests, such as FEV 1.0. Best results can be obtained by multiple trials for each subject. The best of three trials or the average of the last three of five trials may be used in obtaining reliable results. The type of equipment used (manufacturer, model, etc.) should be recorded with the results as reliability and accuracy varies and such information may be important in the evaluation of test results. Care should be exercised to obtain the best possible testing equipment.

PART R
HAZARDOUS DRUGS

WAC	Page
WAC 296-62-500 Hazardous drugs.	***1***
WAC 296-62-50005 Scope.	**1**
WAC 296-62-50010 Definitions.	**2**
WAC 296-62-50015 Hazardous drugs control program.	**3**
WAC 296-62-50020 Hazard assessment.	**4**
WAC 296-62-50025 Engineering controls.	**5**
WAC 296-62-50030 Personal protective equipment (PPE).	**7**
WAC 296-62-50035 Safe handling practices.	**8**
WAC 296-62-50040 Cleaning and housekeeping.	**9**
WAC 296-62-50045 Spill control.	**9**
WAC 296-62-50050 Training.	**10**
WAC 296-62-50055 Implementation plan.	**10**

WAC 296-62-500 Hazardous drugs.

This chapter provides minimum requirements for developing a hazardous drugs control program when occupational exposure to hazardous drugs is reasonably anticipated. It is designed to provide effective, assessment-based precautions to minimize or eliminate occupational exposure to hazardous drugs.

IMPORTANT:

Occupational exposure to hazardous drugs is also covered under WAC 296-800-170, Employer chemical hazard communication--Introduction. In addition the employer must follow the requirements in WAC 296-800-160, personal protective equipment (PPE) and chapter 296-842 WAC, Respirators. Whenever there is a conflict between rule requirements the most protective requirement will take precedent.

WAC 296-62-50005 Scope.

(1) This chapter applies to all employers in health care facilities regardless of the setting that have employees with occupational exposure to hazardous drugs.

(2) **Chapter application**.

(a) The requirements in this rule only apply to the hazardous drugs being used in the workplace.

(b) If hazardous drugs are being used in the workplace the requirements in this rule only apply if there is reasonably anticipated occupational exposure as defined in WAC 296-62-50010.

(c) If there is reasonably anticipated occupational exposure to one or more hazardous drugs, the employer must develop a hazardous drugs control program as required in section WAC 296-62-50015.

(d) For purposes of making the determinations in this section about scope and application, occupational exposure is that exposure which would be reasonably anticipated in the absence of engineering controls or PPE.

(3) The following lists jobs that may involve occupational exposure to hazardous drugs. This is not an exhaustive list and there may be other jobs that fall within the scope of this chapter:

(a) Pharmacists and pharmacy technicians.

(b) Physicians and physician assistants.

(c) Nurses (ARNPs, RNs, LPNs).

(d) Patient care assistive personnel (e.g., health care assistants, nursing assistants).

(e) Operating room personnel.

(f) Home health care workers.

(g) Veterinarians and veterinary technicians.

(h) Environmental services employees (e.g., housekeeping, laundry, and waste disposal) in health care facilities.

(i) Employees in health care facilities who ship, or receive hazardous drugs from the manufacturer or distributor.

WAC 296-62-50010 Definitions.

Biological safety cabinet. A ventilated cabinet for compounding pharmaceutical ingredients, personnel, product, and environmental protection having an open front with inward airflow for personnel protection, downward high-efficiency air (HEPA)-filtered laminar airflow for product protection, and HEPA-filtered exhausted air for environmental protection. For a complete description of the different types of biologic safety cabinets see the Centers for Disease Control and Prevention (CDC)/National Institutes of Health (NIH) document *Primary Containment for Biohazards: Selection, Installation and Use of Biological Safety Cabinets*.

Chemotherapy glove. A medical glove that has been approved by the Food and Drug Administration (FDA) and that meets the permeability standards of the American Society for Testing Materials (ASTM) Standard D6978 - 05.

Closed system drug-transfer device. A drug-transfer device that mechanically prohibits the transfer of environmental contaminants into the system and the escape of hazardous drug or vapor concentrations outside of the system.

Decontamination. Inactivation, neutralization, or removal of toxic agents, usually by chemical means.

Engineering controls. Devices designed to eliminate or reduce worker exposure to hazards. Examples include biological safety cabinets, laboratory fume hoods, containment isolators, safer sharps devices, and safety interlocks.

Hazardous drugs. Any drug identified as hazardous by the National Institute for Occupational Safety and Health (NIOSH) at the Centers for Disease Control (CDC) or any drug that meets at least one of the following six criteria:

(a) Carcinogenicity.

(b) Teratogenicity or developmental toxicity.

(c) Reproductive toxicity in humans.

(d) Organ toxicity at low doses in humans or animals.

(e) Genotoxicity.

(f) New drugs that mimic existing hazardous drugs in structure and toxicity.

Health care facilities. All hospitals, clinics, nursing homes, laboratories, offices or similar places where a health care provider provides health care to patients. For purposes of this chapter this includes veterinary medicine, retail pharmacies, home health care agencies and also those research laboratories in settings where a health care provider provides health care to patients. It does not include the drug manufacturing sector or research laboratories where health care providers do not provide health care to patients.

HEPA filter. A high-efficiency particulate air filter rated 99.97% efficient in capturing 0.3-micron-diameter particles.

Isolator. A device that is sealed or is supplied with air through a microbially retentive filtration system (HEPA minimum) and may be reproducibly decontaminated. When closed, an isolator uses only decontaminated interfaces (when necessary) or rapid transfer ports (RTPs) for materials transfer. When open, it allows for the ingress and/or egress of materials through defined openings that have been designed and validated to preclude the transfer of contaminants or unfiltered air to adjacent environments. An isolator can be used for aseptic processing, for containment of potent compounds, or for simultaneous asepsis and containment. Some isolator designs allow operations within the isolator to be conducted through attached rubber gloves without compromising asepsis and/or containment.

- **Aseptic isolator**. A ventilated isolator designed to exclude external contamination from entering the critical zone inside the isolator.
- **Aseptic containment isolator**. A ventilated isolator designed to meet the requirements of both an aseptic isolator and a containment isolator.
- **Containment isolator**. A ventilated isolator designed to prevent the toxic materials processed inside it from escaping to the surrounding environment.

Occupational exposure. Reasonably anticipated inhalation, skin, ingestion, or injection contact with hazardous drugs as a result of the performance of an employee's duties. Some drugs defined as hazardous may not pose a significant risk of occupational exposure because of their dosage formulation (for example, coated tablets or capsules that are administered to patients without modifying the formulation). However, they may pose a risk if altered (for example, if tablets are crushed or dissolved, or if capsules are pierced or opened).

Safety data sheet. A summary provided by the manufacturer to describe the chemical properties and hazards of specific chemicals and ways in which workers can protect themselves from exposure to these chemicals.

Ventilated cabinet. A type of engineering control designed for purposes of worker protection. These devices are designed to minimize worker exposures by controlling emissions of airborne contaminants through the following:

(a) The full or partial enclosure of a potential contaminant source.

(b) The use of airflow capture velocities to capture and remove airborne contaminants near their point of generation.

(c) The use of air pressure relationships that define the direction of airflow into the cabinet.

Examples of ventilated cabinets include biological safety cabinets and containment isolators.

WAC 296-62-50015 Hazardous drugs control program.

(1) Each health care facility covered under the scope of this chapter must develop and implement a written hazardous drugs control program. Elements of the hazardous drugs control program may be located in other documents such as the employer's accident prevention program or other policies and procedures as long as they are referenced in the program. The hazardous drugs control program must, at a minimum, include the following:

(a) A written inventory of hazardous drugs in the workplace.

(b) A current hazard assessment for hazardous drugs for which there is reasonably anticipated occupational exposure.

(c) Hazardous drugs policies and procedures including, but not limited to:

(i) Engineering controls (equipment use and maintenance).

(ii) Personal protective equipment.

(iii) Safe handling practices (receiving and storage, labeling, preparing, administering, and disposing of hazardous drugs).

(iv) Cleaning, housekeeping, and waste handling.

(v) Spill control.

(vi) Personnel issues (such as exposure of pregnant workers).

(vii) Training.

(2) A standard or universal precautions approach to managing occupational exposure to hazardous drugs is recommended by NIOSH; however, due to the variety of factors that affect occupational exposure some health care facilities may find it more effective to institute precautions based on exposure risk. For example a tiered approach that effectively matches precautions to the nature of exposure may be used including, but not limited to, handling, storing, cleaning, preparing and engineering controls.

(3) Review and update the written hazardous drugs control program annually and whenever changes that affect occupational exposure occur, such as introduction of a new hazardous drug, or a change in handling practices.

(4) Seek and consider input from employees who may be exposed to hazardous drugs as a result of the performance of their duties regarding the quality and effectiveness of the hazardous drugs control program.

WAC 296-62-50020 Hazard assessment.

(1) Each health care facility covered under the scope of this chapter must conduct hazard assessments in order to determine the appropriate precautions to be taken. These assessments may be limited to the hazardous drugs for which there is reasonably anticipated occupational exposure.

(2) **Assessments must include the following elements as appropriate**:

(a) Personal protective equipment.

(b) Engineering controls (e.g., ventilated cabinets, closed-system drug transfer devices, glovebags, and needleless systems).

(c) Physical layout of work areas.

(d) Types of hazardous drugs being handled.

(e) Volume, frequency, packaging, and form of hazardous drugs handled (tablets, coated versus uncoated, powder versus liquid).

(f) Equipment maintenance.

(g) Decontamination and cleaning.

(h) Waste handling.

(i) Potential hazardous drug exposures during work operations, such as drug preparation and administration.

(j) Spill response.

(3) Conduct a hazard assessment as part of the hazardous drugs control program update and whenever changes that affect occupational exposure occur, such as introduction of a new hazardous drug or a change in handling practices.

> *Note: The likelihood that a worker will experience adverse effects from exposure to hazardous drugs varies depending upon the relative toxicity and absorptive properties of a drug, the amount, duration and frequency of contact, and the lack of proper work precautions.*

WAC 296-62-50025 Engineering controls.

(1) Evaluate and implement appropriate engineering controls to eliminate or minimize employee exposure. Examples of engineering controls include, but are not limited to:

(a) Closed system transfer devices.

(b) Safer sharps devices.

(c) Safety interlocks.

(d) Ventilated cabinets.

(2) **Ventilated cabinets**.

(a) Prepare (e.g., mix, compound, crush) hazardous drugs inside an appropriate ventilated cabinet or barrier isolators designed to prevent worker exposure.

(i) Alternate precautions may be used where the hazard assessment determines a low occupational exposure risk while preparing hazardous drugs other than chemotherapy agents (e.g., crushing and splitting tablets, drawing medication into a syringe). These may include, but are not limited to, temporarily designating a preparation area, use of appropriate personal protective equipment, and instituting cleaning procedures.

(ii) Chemotherapy drugs must be prepared in an appropriate ventilated cabinet with the exception of circumstances where the employer can document evidence of a clinical need (e.g., there is a nonroutine need to provide chemotherapy treatment, compounding services are not readily available, and it is in the best interest of the patient to provide local care). In such circumstances alternate precautions must be instituted as described above.

(b) Hazardous drugs that volatilize must be handled only in a ventilated cabinet that captures the volatilized material to prevent employee exposure, or in a ventilated cabinet that does not recirculate air inside the cabinet or exhausts air back into the room environment.

(c) Install and maintain the ventilation equipment determined by your hazard assessment in accordance with:

(i) The ventilation equipment manufacturer's design, instructions, and precautions;

(ii) Appropriate and most current national safety and industry standards.

Note	*The following are examples of industry standards related to installing and maintaining ventilation equipment. There may be other industry standards in addition to those listed below.*

(A) Center for Disease Control/National Institute for Health: Primary Containment for Biohazards: Selection, Installation and Use of Biological Safety Cabinets (CDC/NIH).

(B) National Sanitation Foundation/American National Standards Institute Standard 49, (NSF/ANSI) Class II (laminar flow) Biosafety Cabinetry.

(C) U.S. Pharmacopeia Convention (USP).

(D) American Glove Box Standards.

(iii) National Institute of Occupational Safety and Health (NIOSH) "Preventing Occupational Exposure to Antineoplastic and Other Hazardous Drugs in Health Care Settings"; and

(iv) Applicable state, federal, and local regulations.

(d) Develop and implement maintenance and cleaning procedures that ensure the effectiveness and safety of the ventilated cabinet.

(i) Field-certify biosafety cabinet performance, in accordance with National Sanitation Foundation/American National Standards Institute Standard 49, after installation, relocation, maintenance, repairs to internal components, HEPA filter replacement, and every six months thereafter or as recommended by the manufacturer.

(ii) Select appropriate performance and test methods for isolators, depending on the type (containment only or aseptic containment), the operating pressure (positive or negative and designed magnitude), and toxicity of the hazardous drug. At a minimum, conduct leak and containment integrity tests in accordance with current American Glovebox Society guidelines. In addition perform a HEPA filter leak test for those isolators that utilize HEPA filtration.

(iii) Prominently display a current field-certification label on the ventilated cabinet.

(iv) Make sure that workers performing maintenance are familiar with applicable safety procedures, warned about hazards (e.g., through the provision of material safety data sheet or other equivalent information resources), and trained in appropriate work techniques and PPE needed to minimize exposure.

(v) Remove all hazardous drugs and chemicals, and decontaminate the ventilated cabinet before beginning maintenance activities.

(vi) Notify occupants in the affected areas immediately before the maintenance activity begins, and place warning signs on all affected equipment.

(vii) Deenergize the ventilated cabinet in accordance with chapter 296-803 WAC, Lockout/Tagout (control of hazardous energy).

(viii) Decontaminate and bag equipment parts removed for replacement or repair before they are taken outside the facility.

(ix) Seal used filtration media in plastic immediately upon removal, and dispose as contaminated waste.

Note: Consult the following documents for performance test methods and selection criteria for ventilated cabinets:

(1) Primary Containment for Biohazards: Selection, Installation and Use of Biological Safety Cabinets (CDC/NIH).
(2) NSF/ANSI 49, Class II (laminar flow) Biosafety Cabinetry.

WAC 296-62-50030 Personal protective equipment (PPE).

(1) When there is reasonably anticipated exposure to hazardous drugs each health care facility must conduct a PPE assessment and provide and ensure use of appropriate PPE in accordance with WAC 296-800-160, personal protective equipment (PPE), and chapter 296-842 WAC, Respirators.

(2) **Use appropriate PPE whenever handling body fluids and contaminated laundry**.

(3) **Gloves**.

(a) Use powder-free chemotherapy gloves when handling chemotherapy drugs or when there is potential contact with chemotherapy contaminated items or surfaces.

(b) Provide latex-free gloves to employees with latex sensitivities.

(c) Wear two pairs of gloves when there is a significant risk of breakage or contamination or permeation, e.g., during compounding, extended handling periods, and cleaning up large hazardous drug spills.

(d) Change gloves per glove manufacturer's instruction, type of occupational exposure, or when torn, punctured, or contaminated.

(4) **Protective clothing**.

(a) Wear gowns whenever there is a reasonable possibility of a hazardous drug splash or spill such as in compounding, preparing and administering hazardous drugs.

(b) Wear gowns made of polyethylene-coated polypropylene or other nonabsorbent, nonlinting protective material as determined by the PPE hazard assessment. Make sure the gown has a closed front, long sleeves, and elastic or knit cuffs.

(c) Remove and dispose of gowns at the end of hazardous drug handling activities, when leaving the hazardous drug handling area and as soon as possible when damaged or contaminated.

(d) If no permeation information is available, change gowns every two to three hours or when contaminated after a splash or spill.

(5) **Face protection**. Wear a full-face shield or a mask and eye protection as appropriate when splashes to the eyes, nose, or mouth may occur; examples include cleaning a spill, or performing a procedure such as bladder instillation.

(6) **Respiratory protection**.

(a) Use appropriate respiratory protection or equivalent respiratory protection during spill cleanup and whenever there is a significant risk of inhalation exposure to hazardous drug particulates.

(b) Use an appropriate chemical cartridge-type respirator for events such as large spills of volatile hazardous drugs, e.g., when an intravenous (IV) bag breaks or a line disconnects.

(7) Disposable PPE must be discarded into appropriate containers immediately after use or as soon as feasible after contamination. Reusable PPE must be properly cleaned and decontaminated after use or contamination.

WAC 296-62-50035 Safe handling practices.

(1) **Receiving and storage**.

(a) Label hazardous drug containers in accordance with WAC 296-901-140 Hazard communication.

(b) Store and transport hazardous drugs in a manner that minimizes the risk of breakage.

(2) **Preparation and administration**.

(a) Provide designated work areas for the preparation of hazardous drugs and limit access during preparation.

(b) Coordinate tasks associated with preparing and administering hazardous drugs for the most effective control of worker exposure.

(c) Spike and prime the IV tubing and prepare syringes in a manner that most effectively limits occupational exposure.

(d) Do not remove tubing from an IV bag containing a hazardous drug.

(e) When drug preparation is completed in a ventilated cabinet:

(i) Seal the final product in a plastic bag or other sealed container for transport before taking it out of the cabinet.

(ii) Seal and wipe all waste containers inside the ventilated cabinet before removing them from the cabinet.

(iii) Remove all outer gloves and sleeve covers and bag them for disposal while inside the cabinet.

(3) **Waste handling**.

(a) Dispose of pharmaceutical waste in accordance with applicable state and federal regulations.

(b) Place disposable items in designated containers.

(4) **Personal hygiene**.

(a) Prohibit eating or drinking in areas where hazardous drugs are handled.

(b) Hand washing.

(i) Prior to donning gloves, if hands are contaminated, wash with soap and water; and

(ii) Wash hands with soap and water immediately after removal, and whenever hands become contaminated.

WAC 296-62-50040 Cleaning and housekeeping.

(1) Establish procedures for cleaning and decontamination of areas and equipment where hazardous drugs are present.

(2) Do not clean contaminated equipment in unventilated areas.

(3) Clean work surfaces before and after each continuous activity and at the end of the work shift.

WAC 296-62-50045 Spill control.

Develop written spill response procedures in accordance with chapter 296-824 WAC Emergency response and WAC 296-800-150, first aid summary for emergency washing requirements.

Note: See chapter 296-824 WAC, Emergency response for requirements regarding response to spills that create significant safety and health risks, and WAC 296-800-150, first-aid summary for emergency washing requirements.

WAC 296-62-50050 Training.

(1) Provide effective hazardous drugs training to all employees with occupational exposure at the time of their initial job assignment and whenever a new hazardous drug or a new process related to handling a hazardous drug that the employees have not previously been trained about is introduced into their work area.

(2) Include the training elements listed in WAC 296-901-14016, Inform and train your employees about hazardous chemicals in your workplace.

WAC 296-62-50055 Implementation plan.

The department will work with stakeholders to implement this chapter by doing the following:

(1) Establish a hazardous drugs advisory committee to discuss new NIOSH recommendations, scientific and technological developments and other unanticipated issues related to rule implementation. This committee will include employer and employee representatives of the health care industry and representatives of affected state agencies. It may provide recommendations to the department regarding appropriate actions.

(2) Work with trade associations, labor unions and other representatives from the health care industry to develop model programs for implementation of these rules in a variety of health care facilities and settings. The department will provide education, training and consultation services to ensure that these model programs are widely distributed and can be effectively utilized.

(3) Establish a hazardous drugs web page, and post relevant resources, sample programs and forms.

Statutory Authorities for WAC 296-62
(General Occupational Safety and Health Standards)

WAC 296-62-005 Foreword. [Order 73-3, 296-62-005, filed 5/7/73; Order 70-8, § 296-62-005, filed 7/31/70, effective 9/1/70.]

WAC296-62-010. Purpose and scope. [Statutory Authority: RCW 49.17.010, .040, .050. 01-11-038 (Order 99-36), § 296-62-010, filed 05/09/01, effective 09/09/01. Order 73-3, § 296-62-010, filed 5/7/73; Order 70-8, § 296-62-010, filed 7/31/70, effective 9/1/70; Section I, effective 8/1/63.]

WAC 296-62-020 Definitions. [Statutory Authority: RCW 49.17.010, .040, .050, and .060. 19-01-094 (Order 16-24), § 296-62-020, filed12/18/2018, effective 01/19/2019. Statutory Authority: RCW 49.17.010, .020, .040, .050, and .060. 07-03-163 (Order 06-30), § 296-62-020, filed 01/24/07, effective 04/01/07. Statutory Authority: Chapter 49.17 RCW. 94-15-096 (Order 94-07), § 296-62-020, filed 7/20/94, effective 9/20/94. Statutory Authority: RCW 49.17.040 and 49.17.050. 83-24-013 (Order 83-34), § 296-62-020, filed 11/30/83. Statutory Authority: RCW 49.17.040, 49.17.050, 49.17.240, chapters 43.22 and 42.30 RCW. 80-17-015 (Order 80-21), § 296-62-020, filed 11/13/80; Order 73-3, § 296-62-020, filed 5/7/73; Order 70-8, § 296-62-020, filed 7/31/70, effective 9/1/70; Section II, effective 8/1/63.]

WAC 296-62-040 Unconstitutionality clause. [Statutory Authority: Order 73-3, § 296-62-040, filed 5/7/73; Order 70-8, § 296-62-040, filed 7/31/70, effective 9/1/70; Rule 4.010, effective 8/1/63.]

WAC 296-62-050. Application for waiver or variances. [Statutory Authority: RCW 49.17.010, .020, .040, .050, and .060. 07-03-163 (Order 06-30), § 296-62-050, filed 01/24/07, effective 04/01/07. Statutory Authority: RCW 49.17.010, .040, .050. 01-11-038 (Order 99-36), § 296-62-050, filed 05/09/01, effective 09/09/01. Order 73-3, 296-62-050, filed 5/7/73; Order 70-8, § 296-62-050, filed 7/31/70, effective 9/1/70; Rule 5.010, effective 8/1/63.]

WAC 296-62-055 Retain labeling required by the department of transportation. [Statutory Authority: RCW 49.17.010, .040, .050, and .060. 03-01-096 (Order 02-11), § 296-62-055, filed 12/17/02, effective 06/01/03.]

WAC 296-62-05510. Scope. [Statutory Authority: RCW 49.17.010, .040, .050, and .060. 03-01-096 (Order 02-11), § 296-62-05510, filed 12/17/02, effective 06/01/03.]

WAC 296-62-05520. Retain readily visible DOT labeling. [Statutory Authority: RCW 49.17.010, .040, .050, and .060. 19-01-094 (Order 16-24), § 296-62-05520, filed12/18/2018, effective 01/19/2019. Statutory Authority: RCW 49.17.010, 49.17.040, 49.17.050, 49.17.060 and 29 C.F.R. 1910 Subpart Z. WSR 14-07-086, § 296-62-05520, filed 3/18/14, effective 5/1/14. Statutory Authority: RCW 49.17.010, 49.17.040, 49.17.050, and 49.17.060. WSR 03-01-096, § 296-62-05520, filed 12/17/02, effective 6/1/03.]

296-62-060 Control requirements in addition to those specified. [Statutory Authority: RCW 49.17.010, .040, .050, and .060. 19-01-094 (Order 16-24), § 296-62-060, filed12/18/2018, effective 01/19/2019. Statutory Authority: RCW 49.17.010, .040, .050. 02-16-047 (Order 02-02), § 296-62-060, filed 08/01/02, effective 10/01/02. Statutory Authority: RCW 49.17.040, 49.17.050, and 49.17.240. 80-11-010 (Order 80-14), § 296-62-060, filed 8/8/80; Order 73-3, § 296-62-060, filed 5/7/73; Order 70-8, § 296-62-060, filed 7/31/70, effective 9/1/70; Rule 6.010, effective 8/1/63.]

WAC 296-62-073. Carcinogens. Scope and application. [Statutory Authority: Chapter 49.17 RCW. 87-24-051 (Order 87-24), § 296-62-073, filed 11/30/87. Statutory Authority: RCW 49.17.040, 49.17.050, 49.17.240, chapters 42.30 and 43.22 RCW. 80-17-014 (Order 80-20), § 296-62-073, filed 11/13/80; Order 76-6, § 296-62-073, filed 3/1/76; Order 74-35, § 296-62-073, filed 9/20/74.]

WAC 296-62-07302 Communication of hazards. [Statutory Authority: RCW 49.17.010, .040, .050, and .060. 19-01-094 (Order 16-24), § 296-62-07302, filed12/18/2018, effective 01/19/2019. Statutory Authority: RCW 49.17.010, .040, .050, and .060. 14-07-086 (Order 13-08), § 296-62-07302, filed 03/18/14, effective 05/01/14. Statutory Authority: RCW 49.17.010, .040, .050. 02-12-098 (Order 00-20), § 296-62-07302, filed 06/05/02, effective 08/01/02. Statutory Authority: Chapter 49.17 RCW. 94-15-096 (Order 94-07), § 296-62-07302, filed 7/20/94, effective 9/20/94. Statutory Authority: RCW 49.17.040 and 49.17.050. 85-10-004 (Order 85-09), § 296-62-07302, filed 4/19/85; 82-13-045 (Order 82-22), § 296-62-07302, filed 6/11/82; 81-07-048 (Order 81-4), § 296-62-07302, filed 3/17/81. Statutory Authority: RCW 49.17.040, 49.17.050, 49.17.240, chapters 42.30 and 43.22 RCW. 80-17-014 (Order 80-20), § 296-62-07302, filed 11/13/80.]

WAC 296-62-07304 Definitions. [Statutory Authority: RCW 49.17.010, .040, .050, and .060. 19-01-094 (Order 16-24), § 296-62-07304, filed12/18/2018, effective 01/19/2019. Statutory Authority: RCW 49.17.010, .040, .050. 02-12-098 (Order 00-20), § 296-62-07304, filed 06/05/02, effective 08/01/02. Statutory Authority: Chapter 49.17 RCW. 87-24-051 (Order 87-24), § 296-62-07304, filed 11/30/87. Statutory Authority: RCW 49.17.040 and 49.17.050. 81-07-048 (Order 81-4), § 296-62-07304, filed 3/17/81. Statutory Authority: RCW 49.17.040, 49.17.050, 49.17.240, chapters 42.30 and 43.22 RCW. 80-17-014 (Order 80-20), § 296-62-07304, filed 11/13/80.]

WAC 296-62-07306 Requirements for areas containing carcinogens listed in WAC296-62-07302. [Statutory Authority: RCW 49.17.010, .040, .050, and .060. 19-01-094 (Order 16-24), § 296-62-07306, filed12/18/2018, effective 01/19/2019. Statutory Authority: RCW 49.17.010, .040, .050, and .060. 14-07-086 (Order 13-08), § 296-62-07306, filed 03/18/14, effective 05/01/14. Statutory Authority: RCW 49.17.010, .040, .050, and .060. 12-24-071 (Order 12-20), § 296-62-07306, filed 12/04/12, effective 01/04/13. Statutory Authority: RCW 49.17.010, .040, .050, and .060. 09-15-145 (Order 09-04), § 296-62-07306, filed 07/21/09, effective 09/01/09. Statutory Authority: RCW 49.17.010, .040, .050, and .060. 05-03-093 (Order 04-41), § 296-62-07306, filed 01/18/05, effective 03/01/05. Statutory Authority: RCW 49.17.010, .040, .050. 01-11-038 (Order 99-36), § 296-62-07306, filed 05/09/01, effective 09/01/01. Statutory Authority: RCW 49.17.010, .040, .050. 99-10 (Order 98-10) § 296-62-07271, filed 05/04/99, effective 09/01/99.] Statutory Authority: Chapter 49.17 RCW. 96-09-030, § 296-62-07306, filed 4/10/96, effective 6/1/96. Statutory Authority: RCW 49.17.040 and 49.17.050. 86-16-009 (Order 86-28), § 296-62-07306, filed 7/25/86; 85-10-004 (Order 85-09), § 296-62-07306, filed 4/19/85. Statutory Authority: RCW 49.17.040, 49.17.050 and 49.17.240. 81-16-015 (Order 81-20), § 296-62-07306, filed 7/27/81. Statutory Authority: RCW 49.17.040, 49.17.050, 49.17.240, chapters 42.30 and 43.22 RCW. 80-17-014 (Order 80-20), § 296-62-07306, filed 11/13/80.]

WAC 296-62-07308 General regulated area requirements. [Statutory Authority: RCW 49.17.010, .040, .050, and .060. 19-01-094 (Order 16-24), § 296-62-07308, filed12/18/2018, effective 01/19/2019. Statutory Authority: RCW 49.17.010, .040, .050, and .060. 09-15-145 (Order 09-04), § 296-62-07308, filed 07/21/09, effective 09/01/09. Statutory Authority: RCW 49.17.010, .040, .050, and .060. 03-18-090 (Order 03-15), § 296-62-07308, filed 09/02/03, effective 11/01/03. Statutory Authority: RCW 49.17.010, .040, .050. 01-11-038 (Order 99-36), § 296-62-07308, filed 05/09/01, effective 09/01/01. Statutory Authority: RCW 49.17.010, .040, .050. 99-10 (Order 98-10) § 296-62-07308, filed 05/04/99, effective 09/01/99.] Statutory Authority: RCW 49.17.040 and 49.17.050. 83-24-013 (Order 83-34), § 296-62-07308, filed 11/30/83. Statutory Authority: RCW 49.17.040, 49.17.050, 49.17.240, chapters 42.30 and 43.22 RCW. 80-17-014 (Order 80-20), § 296-62-07308, filed 11/13/80.]

WAC 296-62-07310 Signs, information and training. [Statutory Authority: RCW 49.17.010, .040, .050, and .060. 19-01-094 (Order 16-24), § 296-62-07310, filed12/18/2018, effective 01/19/2019. Statutory Authority: RCW 49.17.010, .040, .050, and .060. 14-07-086 (Order 13-08), § 296-62-07310, filed 03/18/14, effective 05/01/14. Statutory Authority: Chapter 49.17 RCW. 87-24-051 (Order 87-24), § 296-62-07310, filed 11/30/87. Statutory Authority: RCW 49.17.040 and 49.17.050. 81-07-048 (Order 81-4), § 296-62-07310, filed 3/17/81. Statutory Authority: RCW 49.17.040, 49.17.050, 49.17.240, chapters 42.30 and 43.22 RCW. 80-17-014 (Order 80-20), § 296-62-07310, filed 11/13/80.]

WAC 296-62-07312 Reports. [Statutory Authority: RCW 49.17.010, .040, .050, and .060. 19-01-094 (Order 16-24), § 296-62-07312, filed12/18/2018, effective 01/19/2019. Statutory Authority: RCW 49.17.010, .040, .050. 02-12-098 (Order 00-20), § 296-62-07312, filed 06/05/02, effective 08/01/02. Statutory Authority: RCW 49.17.040 and 49.17.050. 81-07-048 (Order 81-4), § 296-62-07312, filed 3/17/81. Statutory Authority: RCW 49.17.040, 49.17.050, 49.17.240, chapters 42.30 and 43.22 RCW. 80-17-014 (Order 80-20), § 296-62-07312, filed 11/13/80.]

WAC 296-62-07314. Medical surveillance. [Statutory Authority RCW 49.17.010, .040, .050, and .060. 19-01-094 (Order 16-24), § 296-62-07314, filed12/18/2018, effective 01/19/2019. Statutory Authority: RCW 49.17.010, .040, .050, and .060. 12-24-071 (Order 12-20), § 296-62-07314, filed 12/04/12, effective 01/04/13. Statutory Authority: RCW 49.17.010, .040, .050, and .060. 04-10-026 (Order 03-04), § 296-62-07314, filed 04/27/04, effective 08/01/04. Statutory Authority: RCW 49.17.010, .040, .050. 02-12-098 (Order 00-20) § 296-62-07314, filed 06/05/02, effective 08/01/02. Statutory Authority: Chapter 49.17 RCW. 91-03-044 (Order 90-18), § 296-62-07314, filed 1/10/91, effective 2/12/91; 90-03-029 (Order 89-20), § 296-62-07314, filed 1/11/90, effective 2/26/90. Statutory Authority: RCW 49.17.040 and 49.17.050. 83-15-017 (Order 83-19), § 296-62-07314, filed 7/13/83, effective 9/12/83. Statutory Authority: RCW 49.17.040, 49.17.050, 49.17.240, chapters 42.30 and 43.22 RCW. 80-17-014 (Order 80-20), § 296-62-07314, filed 11/13/80.]

WAC 296-62-07316. Premixed solutions. [Statutory Authority: RCW 49.17.010, .040, .050, and .060. 19-01-094 (Order 16-24), § 296-62-07316, filed12/18/2018, effective 01/19/2019. Statutory Authority: RCW 49.17.040, 49.17.050, 49.17.240, chapters 42.30 and 43.22 RCW. 80-17-014 (Order 80-20), § 296-62-07316, filed 11/13/80.]

WAC 296-62-07329. Vinyl chloride. [Statutory Authority: RCW 49.17.010, .040, .050, and .060. 19-01-094 (Order 16-24), § 296-62-07329WA, filed12/18/2018, effective 01/19/2019. Statutory Authority: RCW 49.17.010, .040, .050, and .060. 14-07-086 (Order 13-08), § 296-62-07329, filed 03/18/14, effective 05/01/14. Statutory Authority: RCW 49.17.010, .040, .050, and .060. 12-24-071 (Order 12-20), § 296-62-07329, filed 12/04/12, effective 01/04/13. Statutory Authority: RCW 49.17.010, .040, .050, and .060. 09-15-145 (Order 09-04), § 296-62-07329, filed 07/21/09, effective 09/01/09. RCW 49.17.010, .040, .050, and .060. 07-05-072 (Order 06-39), § 296-62-07329, filed 02/20/07, effective 04/01/07. Statutory Authority: RCW 49.17.010, .040, .050, and .060. 05-03-093 (Order 04-41), § 296-62-07329, filed 01/18/05, effective 03/01/05. Statutory Authority: RCW 49.17.010, .040, .050, and .060. 04-10-026 (Order 03-04) § 296-62-07329, filed 04/27/04, effective 08/01/04. Statutory Authority: RCW 49.17.010, .040, .050. 99-10 (Order 98-10) § 296-62-07329, filed 05/04/99, effective 09/01/99. Statutory Authority: Chapter 49.17 RCW. 94-15-096 (Order 94-07), § 296-62-07329, filed 7/20/94, effective 9/20/94; 91-03-044 (Order 90-18), § 296-62-07329, filed 1/10/91, effective 2/12/91. Statutory Authority: RCW 49.17.040 and 49.17.050. 86-16-009 (Order 86-28), § 296-62-07329, filed 7/25/86; 82-13-045 (Order 82-22), § 296-62-07329, filed 6/11/82. Statutory Authority: RCW 49.17.040, 49.17.050 and 49.17.240. 81-18-029 (Order 81-21), § 296-62-07329, filed 8/27/81; 81-16-015 (Order 81-20), § 296-62-07329, filed 7/27/81; Order 75-41, § 296-62-07329, filed 12/19/75.]

WAC 2396-62-07336 Acrylonitrile. [Statutory Authority: RCW 49.17.010, .040, .050, and .060. 19-01-094 (Order 16-24), § 296-62-07336, filed12/18/2018, effective 01/19/2019. Statutory Authority: RCW 49.17.010, .040, .050, and .060. 14-07-086 (Order 13-08), § 296-62-07336, filed 03/18/14, effective 05/01/14. Statutory Authority: RCW 49.17.010, .040, .050, and .060. 12-24-071 (Order 12-20), § 296-62-07336, filed 12/04/12, effective 01/04/13. Statutory Authority: RCW 49.17.010, .040, .050, and .060. 09-15-145 (Order 09-04), § 296-62-07336, filed 07/21/09, effective 09/01/09. Statutory Authority: RCW 49.17.010, .040, .050, and .060. 07-05-072 (Order 06-39), § 296-62-07336, filed 02/20/07, effective 04/01/07. Statutory Authority: RCW 49.17.010, .040, .050, and .060. 05-03-093 (Order 04-41), § 296-62-07336, filed 01/18/05, effective 03/01/05. Statutory Authority: RCW 49.17.010, .040, .050, and .060. 04-10-026 (Order 03-04) § 296-62-07336, filed 04/27/04, effective 08/01/04. Statutory Authority: RCW 49.17.010, .040, .050, and .060. 03-18-090 (Order 03-15), § 296-62-07336, filed 09/02/03, effective 11/01/03. Statutory Authority: RCW 49.17.010, .040, .050. 01-11-038 (Order 99-36), § 296-62-07336, filed 05/09/01, effective 09/01/01. Statutory Authority: RCW 49.17.010, .040, .050. 99-10 (Order 98-10) § 296-62-07336, filed 05/04/99, effective 09/01/99.] Statutory Authority: Chapter 49.17 RCW. 88-11-021 (Order 88-04), § 296-62-07336, filed 5/11/88.]

WAC 296-62-07337 Appendix A—Substance safety data sheet for acrylonitrile. [Statutory Authority: RCW 49.17.010, .040, .050. 99-10 (Order 98-10) § 296-62-07337, filed 05/04/99, effective 09/01/99.] Statutory Authority: Chapter 49.17 RCW. 94-15-096 (Order 94-07), § 296-62-07337, filed 7/20/94, effective 9/20/94; 88-11-021 (Order 88-04), § 296-62-07337, filed 5/11/88.]

WAC 296-62-07338 Appendix B—Substance technical guidelines for acrylonitrile. [Statutory Authority: RCW 49.17.010, .040, .050, and .060. 19-01-094 (Order 16-24), § 296-62-07338, filed12/18/2018, effective 01/19/2019. Statutory Authority: RCW 49.17.010, .040, .050. 01-11-038 (Order 99-36), § 296-62-07338, filed 05/09/01, effective 09/01/01. Statutory Authority: Chapter 49.17 RCW. 88-11-021 (Order 88-04), § 296-62-07338, filed 5/11/88.]

WAC 296-62-07339 Appendix C—Medical surveillance guidelines for acrylonitrile. [Statutory Authority: 07337, filed 5/11/88.]

WAC 296-62-07340 Appendix D—Sampling and analytical methods for acrylonitrile. [Statutory Authority: RCW 49.17.010, .040, .050, and .060. 19-01-094 (Order 16-24), § 296-62-07340, filed12/18/2018, effective 01/19/2019. Statutory Authority: Chapter 49.17 RCW. 88-11-021 (Order 88-04), § 296-62-07340, filed 5/11/88.]

WAC 296-62-07342 1,2-Dibromo-3-chloropropane. [Statutory Authority: RCW 49.17.010, .040, .050, and .060. 19-01-094 (Order 16-24), § 296-62-07342, filed12/18/2018, effective 01/19/2019. Statutory Authority: RCW 49.17.010, .040, .050, and .060. 14-07-086 (Order 13-08), § 296-62-07342, filed 03/18/14, effective 05/01/14. Statutory Authority: RCW 49.17.010, .040, .050, and .060. 12-24-071 (Order 12-20), § 296-62-07342, filed 12/04/12, effective 01/04/13. Statutory Authority: RCW 49.17.010, .040, .050, and .060. 09-15-145 (Order 09-04), § 296-62-07342, filed 07/21/09, effective 09/01/09. Statutory Authority: RCW 49.17.010, .040, .050, and .060. 07-05-072 (Order 06-39), § 296-62-07342, filed 02/20/07, effective 04/01/07. Statutory Authority: RCW 49.17.010, .040, .050, and .060. 05-03-093 (Order 04-41), § 296-62-07342, filed 01/18/05, effective 03/01/05. Statutory Authority: RCW 49.17.010, .040, .050, and .060. 04-10-026 (Order 03-04) § 296-62-07342, filed 04/27/04, effective 08/01/04. Statutory Authority: RCW 49.17.010, .40, .050, and .060. 03-18-090 (Order 03-15), § 296-62-07342, filed 09/02/03, effective 11/01/03. Statutory Authority: RCW 49.17.010, .040, .050. 01-11-038 (Order 99-36), § 296-62-07342, filed 05/09/01, effective 09/01/01. Statutory Authority: RCW 49.17.010, .040, .050. 99-10 (Order 98-10), § 296-62-07342, filed 05/04/99, effective 09/01/99. Statutory Authority: Chapter 49.17 RCW. 96-09-030 (Order 96-01), § 296-62-07342, filed 4/10/96, effective 6/1/96; 88-11-021 (Order 88-04), § 296-62-07342, filed 5/11/88.]

WAC 296-62-07343 Appendix A--Substance safety data sheet for DBCP. [Statutory Authority: RCW 49.17.010, .040, .050, and .060. 19-01-094 (Order 16-24), § 296-62-07343, filed12/18/2018, effective 01/19/2019. Statutory Authority: RCW 49.17.010, .040, .050. 99-10 (Order 98-10) § 296-62-07343, filed 05/04/99, effective 09/01/99.] Statutory Authority: Chapter 49.17 RCW. 94-15-096 (Order 94-07), § 296-62-07343, filed 7/20/94, effective 9/20/94; 88-11-021 (Order 88-04), § 296-62-07343, filed 5/11/88.]

WAC 296-62-07344 Appendix B--Substance technical guidelines for DBCP. [Statutory Authority: RCW 49.17.010, .040, .050, and .060. 19-01-094 (Order 16-24), § 296-62-07343, filed12/18/2018, effective 01/19/2019. Statutory Authority: Chapter 49.17 RCW. 91-24-017 (Order 91-07), § 296-62-07344, filed 11/22/91, effective 12/24/91; 88-11-021 (Order 88-04), § 296-62-07344, filed 5/11/88.]

WAC 296-62-07346 Appendix C--Medical surveillance guidelines for DBCP.[Statutory Authority: Chapter 49.17 RCW. 88-11-021 (Order 88-04), § 296-62-07346, filed 5/11/88.]

WAC 296-62-07355 Ethylene oxide. Scope and application. [Statutory Authority: RCW 49.17.010, .040, .050, and .060. 19-01-094 (Order 16-24), § 296-62-07355, filed12/18/2018, effective 01/19/2019. Statutory Authority: Chapter 49.17 RCW. 91-24-017 (Order 91-07), § 296-62-07355, filed 11/22/91, effective 12/24/91;88-23-054 (Order 88-25), § 296-62-07355, filed 11/14/88; 87-24-051 (Order 87-24), § 296-62-07355, filed 11/30/87.]

WAC 296-62-07357 Definitions. [Statutory Authority: RCW 49.17.010, .040, .050, and .060. 19-01-094 (Order 16-24), § 296-62-07357, filed12/18/2018, effective 01/19/2019. Statutory Authority: Chapter 49.17 RCW. 87-24-051 (Order 87-24), § 296-62-07357, filed 11/30/87.]

WAC 296-62-07359 Permissible exposure limits (PEL). [Statutory Authority: RCW 49.17.010, .040, .050, and .060. 19-01-094 (Order 16-24), § 296-62-07359, filed12/18/2018, effective 01/19/2019. Statutory Authority: Chapter 49.17 RCW. 88-23-054 (Order 88-25), § 296-62-07359, filed 11/14/88; 87-24-051 (Order 87-24), § 296-62-07359, filed 11/30/87.]

WAC 296-62-07361 Exposure monitoring. [Statutory Authority: RCW 49.17.010, .040, .050, and .060. 19-01-094 (Order 16-24), § 296-62-07361, filed12/18/2018, effective 01/19/2019. Statutory Authority: Chapter 49.17 RCW. 88-23-054 (Order 88-25), § 296-62-07361, filed 11/14/88; 87-24-051 (Order 87-24), § 296-62-07361, filed 11/30/87.]

WAC 296-62-07363 Regulated areas. [Statutory Authority: RCW 49.17.010, .040, .050, and .060. 19-01-094 (Order 16-24), § 296-62-07363, filed12/18/2018, effective 01/19/2019. Statutory Authority: Chapter 49.17 RCW. 88-23-054 (Order 88-25), § 296-62-07363, filed 11/14/88; 87-24-051 (Order 87-24), § 296-62-07363, filed 11/30/87.]

WAC 296-62-07365 Methods of compliance. [Statutory Authority: RCW 49.17.010, .040, .050, and .060. 19-01-094 (Order 16-24), § 296-62-07365, filed12/18/2018, effective 01/19/2019. Statutory Authority: Chapter 49.17 RCW. 88-23-054 (Order 88-25), § 296-62-07365, filed 11/14/88; 87-24-051 (Order 87-24), § 296-62-07365, filed 11/30/87.]

WAC 296-62-07367 Respiratory protection and personal protective equipment. [Statutory Authority: RCW 49.17.010, .040, .050, and .060. 19-01-094 (Order 16-24), § 296-62-07367, filed12/18/2018, effective 01/19/2019. Statutory Authority: RCW 49.17.010, .040, .050, and .060. 05-03-093 (Order 04-41), § 296-62-07306, filed 01/18/05, effective 03/01/05. Statutory Authority: RCW 49.17.010, .040, .050. 01-11-038 (Order 99-36), § 296-62-07367, filed 05/09/01, effective 09/01/01. Statutory Authority: RCW 49.17.010, .040, .050. 99-10 (Order 98-10) § 296-62-07367, filed 05/04/99, effective 09/01/99.] Statutory Authority: Chapter 49.17 RCW. 94-20-057 (Order 94-16), § 296-62-07367, filed 9/30/94, effective 11/20/94; 88-23-054 (Order 88-25), § 296-62-07367, filed 11/14/88; 87-24-051 (Order 87-24), § 296-62-07367, filed 11/30/87.]

WAC 296-62-07369 Emergency situations. [Statutory Authority: RCW 49.17.010, .040, .050, and .060. 19-01-094 (Order 16-24), § 296-62-07369, filed12/18/2018, effective 01/19/2019. Statutory Authority: RCW 49.17.010, .040, .050. 99-10 (Order 98-10) § 296-62-07369, filed 05/04/99, effective 09/01/99.] Statutory Authority: Chapter 49.17 RCW. 87-24-051 (Order 87-24), § 296-62-07369, filed 11/30/87.]

WAC 296-62-07371 Medical surveillance. [Statutory Authority: RCW 49.17.010, .040, .050, and .060. 19-01-094 (Order 16-24), § 296-62-07371, filed12/18/2018, effective 01/19/2019. Statutory Authority: Chapter 49.17 RCW. 87-24-051 (Order 87-24), § 296-62-07371, filed 11/30/87.]

WAC 296-62-07373 Communication of EtO hazards. [Statutory Authority: RCW 49.17.010, .040, .050, and .060. 19-01-094 (Order 16-24), § 296-62-07373, filed12/18/2018, effective 01/19/2019. Statutory Authority: RCW 49.17.010, .040, .050, and .060. 14-07-086 (Order 13-08), § 296-62-07373, filed 03/18/14, effective 05/01/14. Statutory Authority: RCW 49.17.010, .020, .040, .050, and .060. 07-03-163 (Order 06-30), § 296-62-07373, filed 01/24/07, effective 04/01/07. Statutory Authority: RCW 49.17.010, .040, .050. 01-11-038 (Order 99-36), § 296-62-07373, filed 05/09/01, effective 09/01/01. Statutory Authority: Chapter 49.17 RCW. 88-23-054 (Order 88-25), § 296-62-07373, filed 11/14/88; 87-24-051 (Order 87-24), § 296-62-07373, filed 11/30/87.]

WAC 296-62-07375 Recordkeeping. [Statutory Authority: RCW 49.17.010, .040, .050, and .060. 19-01-094 (Order 16-24), § 296-62-07375, filed12/18/2018, effective 01/19/2019. Statutory Authority: RCW 49.17.010, .040, .050, and .060. 04-10-026 (Order 03-04) § 296-62-07375, filed 04/27/04, effective 08/01/04. Statutory Authority: Chapter 49.17 RCW. 87-24-051 (Order 87-24), § 296-62-07375, filed 11/30/87.]

WAC 296-62-07377 Observation of monitoring. [Statutory Authority: RCW 49.17.010, .040, .050, and .060. 19-01-094 (Order 16-24), § 296-62-07377, filed12/18/2018, effective 01/19/2019. Statutory Authority: Chapter 49.17 RCW. 87-24-051 (Order 87-24), § 296-62-07377, filed 11/30/87.]

WAC 296-62-07381 Appendices. [Statutory Authority: Chapter 49.17 RCW. 87-24-051 (Order 87-24), § 296-62-07381, filed 11/30/87.]

WAC 296-62-07383 Appendix A--Substance safety data sheet for ethylene oxide (nonmandatory). [Statutory Authority: RCW 49.17.010, .040, .050. 99-10 (Order 98-10) § 296-62-07383, filed 05/04/99, effective 09/01/99.] Statutory Authority: Chapter 49.17 RCW. 88-14-108 (Order 88-11), § 296-62-07383, filed 7/6/88; 87-24-051 (Order 87-24), § 296-62-07383, filed 11/30/87.]

WAC 296-62-07385 Appendix B--Substance technical guidelines for ethylene oxide (nonmandatory). [Statutory Authority: RCW 49.17.010, .040, .050. 01-11-038 (Order 99-36), § 296-62-07385, filed 05/09/01, effective 09/01/01. Statutory Authority: Chapter 49.17 RCW. 91-24-017 (Order 91-07), § 296-62-07385, filed 11/22/91, effective 12/24/91; 88-14-108 (Order 88-11), § 296-62-07385, filed 7/6/88; 87-24-051 (Order 87-24), § 296-62-07385, filed 11/30/87.]

WAC 296-62-07387 Appendix C--Medical surveillance guidelines for ethylene oxide (nonmandatory). [Statutory Authority: Chapter 49.17 RCW. 88-14-108 (Order 88-11), § 296-62-07387, filed 7/6/88; 87-24-051 (Order 87-24), § 296-62-07387, filed 11/30/87.]

WAC 296-62-07389 Appendix D--Sampling and analytical methods for ethylene oxide (nonmandatory). [Statutory Authority: Chapter 49.17 RCW. 88-14-108 (Order 88-11), § 296-62-07389, filed 7/6/88; 87-24-051 (Order 87-24), § 296-62-07389, filed 11/30/87.]

WAC 296-62-074 Cadmium. [Statutory Authority: Chapter 49.17 RCW. 93-07-044 (Order 93-01), § 296-62-074, filed 3/13/93, effective 4/27/93.]

WAC 296-62-07401 Scope. [Statutory Authority: Chapter 49.17 RCW. 93-07-044 (Order 93-01), § 296-62-07401, filed 3/13/93, effective 4/27/93.]

WAC 296-62-07403 Definitions. [Statutory Authority: RCW 49.17.010, .040, .050, and .060. 19-01-094 (Order 16-24), § 296-62-07403, filed 12/18/2018, effective 01/19/2019. Statutory Authority: RCW 49.17.010, .040, .050. 99-10 (Order 98-10) § 296-62-07403, filed 05/04/99, effective 09/01/99.] Statutory Authority: Chapter 49.17 RCW. 93-21-075 (Order 93-06), § 296-62-07403, filed 10/20/93, effective 12/1/93; 93-07-044 (Order 93-01), § 296-62-07403, filed 3/13/93, effective 4/27/93.]

WAC 296-62-07405 Permissible exposure limit (PEL). [Statutory Authority: RCW 49.17.010, .040, .050, and .060. 19-01-094 (Order 16-24), § 296-62-07405, filed 12/18/2018, effective 01/19/2019. Statutory Authority: :RCW 49.17.010, .040, .050. 99-10 (Order 98-10) § 296-62-07405, filed 05/04/99, effective 09/01/99.] Statutory Authority: Chapter 49.17 RCW. 93-07-044 (Order 93-01), § 296-62-07405, filed 3/13/93, effective 4/27/93.]

WAC 296-62-07407 Exposure monitoring. [Statutory Authority: RCW 49.17.010, .040, .050, and .060. 19-01-094 (Order 16-24), § 296-62-07407, filed12/18/2018, effective 01/19/2019. Statutory Authority: Chapter 49.17 RCW. 93-07-044 (Order 93-01), § 296-62-07407, filed 3/13/93, effective 4/27/93.]

WAC 296-62-07409 Regulated areas. [Statutory Authority: RCW 49.17.010, .040, .050, and .060. 19-01-094 (Order 16-24), § 296-62-07409, filed 12/18/2018, effective 01/19/2019. Statutory Authority: Chapter 49.17 RCW. 93-07-044 (Order 93-01), § 296-62-07409, filed 3/13/93, effective 4/27/93.]

WAC 296-62-07411 Methods of compliance. [Statutory Authority: RCW 49.17.010, .040, .050, and .060. 19-01-094 (Order 16-24), § 296-62-07411, filed 12/18/2018, effective 01/19/2019. Statutory Authority: Chapter 49.17 RCW. 93-21-075 (Order 93-06), § 296-62-07411, filed 10/20/93, effective 12/1/93; 93-07-044 (Order 93-01), § 296-62-07411, filed 3/13/93, effective 4/27/93.]

WAC 296-62-07413 Respirator protection. [Statutory Authority: RCW 49.17.010, .040, .050, and .060. 09-15-145 (Order 09-04), § 296-62-07413, filed 07/21/09, effective 09/01/09. Statutory Authority: RCW 49.17.010, .040, .050, and .060. 07-05-072 (Order 06-39), § 296-62-07413, filed 02/20/07, effective 04/01/07. Statutory Authority: RCW 49.17.010, .040, .050, and .060. 05-03-093 (Order 04-41), § 296-62-07413, filed 01/18/05, effective 03/01/05. Statutory Authority: RCW 49.17.010, .040, .050. 99-10 (Order 98-10) § § 296-62-07413, filed 05/04/99, effective 09/01/99. Statutory Authority: Chapter 49.17 RCW. 93-21-075 (Order 93-06), § 296-62-07413, filed 10/20/93, effective 12/1/93; 93-07-044 (Order 93-01), § 296-62-07413, filed 3/13/93, effective 4/27/93.]

WAC 296-62-07415 Emergency situations. [Statutory Authority: RCW 49.17.010, .040, .050, and .060. 19-01-094 (Order 16-24), § 296-62-07415, filed 12/18/2018, effective 01/19/2019. Statutory Authority: Chapter 49.17 RCW. 93-07-044 (Order 93-01), § 296-62-07415, filed 3/13/93, effective 4/27/93.]

WAC 296-62-07417 Protective work clothing and equipment. [Statutory Authority: RCW 49.17.010, .040, .050, and .060. 19-01-094 (Order 16-24), § 296-62-07417, filed 12/18/2018, effective 01/19/2019. Statutory Authority: RCW 49.17.010, .040, .050. 01-11-038 (Order 99-36), § 296-62-07417, filed 05/09/01, effective 09/01/01. Statutory Authority: Chapter 49.17 RCW. 94-20-057 (Order 94-16), § 296-62-07417, filed 9/30/94, effective 11/20/94; 93-21-075 (Order 93-06), § 296-62-07417, filed 10/20/93, effective 12/1/93; 93-07-044 (Order 93-01), § 296-62-07417, filed 3/13/93, effective 4/27/93.]

WAC 296-62-07419 Hygiene areas and practices. [Statutory Authority: RCW 49.17.010, .040, .050, and .060. 19-01-094 (Order 16-24), § 296-62-07419, filed 12/18/2018, effective 01/19/2019. Statutory Authority: RCW 49.17.010, .040, .050, and .060. 03-18-090 (Order 03-15), § 296-62-07419, filed 09/02/03, effective 11/01/03. Statutory Authority: RCW 49.17.010, .040, .050. 01-11-038 (Order 99-36), § 296-62-07419, filed 05/09/01, effective 09/01/01. Statutory Authority: Chapter 49.17 RCW. 93-07-044 (Order 93-01), § 296-62-07419, filed 3/13/93, effective 4/27/93.]

WAC 296-62-07421 Housekeeping. [Statutory Authority: RCW 49.17.010, .040, .050, and .060. 19-01-094 (Order 16-24), § 296-62-07421, filed 12/18/2018, effective 01/19/2019. Statutory Authority: RCW 49.17.010, .040, .050. 02-12-098 (Order 00-20), § 296-62-07421, filed 06/05/02, effective 08/01/02. Statutory Authority: Chapter 49.17 RCW. 93-07-044 (Order 93-01), § 296-62-07421, filed 3/13/93, effective 4/27/93.]

WAC 296-62-07423 Medical surveillance. [Statutory Authority: RCW 49.17.010, .040, .050, and .060. 19-01-094 (Order 16-24), § 296-62-07423, filed 12/18/2018, effective 01/19/2019. Statutory Authority: Chapter 49.17 RCW. 93-21-075 (Order 93-06), § 296-62-07423, filed 10/20/93, effective 12/1/93; 93-07-044 (Order 93-01), § 296-62-07423, filed 3/13/93, effective 4/27/93.]

WAC 296-62-07425 Communication of cadmium hazards. [Statutory Authority: RCW 49.17.010, .040, .050, and .060. 19-01-094 (Order 16-24), § 296-62-07425, filed 12/18/2018, effective 01/19/2019. Statutory Authority: RCW 49.17.010, .040, .050, and .060. 14-07-086 (Order 13-08), § 296-62-07425, filed 03/18/14, effective 05/01/14. Statutory Authority: RCW 49.17.010, .040, .050, and .060. 09-15-145 (Order 09-04), § 296-62-07425, filed 07/21/09, effective 09/01/09. Statutory Authority: RCW 49.17.010, .020, .040, .050, and .060. 07-03-163 (Order 06-30), § 296-62-07425, filed 01/24/07, effective 04/01/07. Statutory Authority: RCW 49.17.010, .040, .050. 01-11-038 (Order 99-36), § 296-62-07425, filed 05/09/01, effective 09/01/01. Statutory Authority: RCW 49.17.010, .040, .050. 99-10 (Order 98-10) § 296-62-07425, filed 05/04/99, effective 09/01/99.] Statutory Authority: Chapter 49.17 RCW. 93-21-075 (Order 93-06), § 296-62-07425, filed 10/20/93, effective 12/1/93; 93-07-044 (Order 93-01), § 296-62-07425, filed 3/13/93, effective 4/27/93.]

WAC 296-62-07427 Recordkeeping. [Statutory Authority: RCW 49.17.010, .040, .050, and .060. 19-01-094 (Order 16-24), § 296-62-07427, filed 12/18/2018, effective 01/19/2019. Statutory Authority: RCW 49.17.010, .040, .050, and .060. 04-10-026 (Order 03-04) § 296-62-07427, filed 04/27/04, effective 08/01/04. Statutory Authority: Chapter 49.17 RCW. 93-07-044 (Order 93-01), § 296-62-07427, filed 3/13/93, effective 4/27/93.]

WAC 296-62-07429 Observation of monitoring. [Statutory Authority: RCW 49.17.010, .040, .050, and .060. 19-01-094 (Order 16-24), § 296-62-07429, filed 12/18/2018, effective 01/19/2019. Statutory Authority: Chapter 49.17 RCW. 93-07-044 (Order 93-01), § 296-62-07429, filed 3/13/93, effective 4/27/93.]

WAC 296-62-07433 Appendices. [Statutory Authority: RCW 49.17.010, .040, .050. 99-17-094 (Order 99-01), § 296-62-07433, filed 08/17/99, effective 12/01/99. Statutory Authority: Chapter 49.17 RCW. 93-07-044 (Order 93-01), § 296-62-07433, filed 3/13/93, effective 4/27/93.]

WAC 296-62-07441 Appendix A--substance safety data sheet—Cadmium. [Statutory Authority: RCW 49.17.010, .040, .050, and .060. 19-01-094 (Order 16-24), § 296-62-07441, filed 12/18/2018, effective 01/19/2019. Statutory Authority: RCW 49.17.010, .040, .050. 99-10 (Order 98-10) § 296-62-07271, filed 05/04/99, effective 09/01/99.] [Statutory Authority: Chapter 49.17 RCW. 94-15-096 (Order 94-07), § 296-62-07441, filed 7/20/94, effective 9/20/94; 93-21-075 (Order 93-06), § 296-62-07441, filed 10/20/93, effective 12/1/93; 93-07-044 (Order 93-01), § 296-62-07441, filed 3/13/93, effective 4/27/93.]

WAC 296-62-07443 Appendix B--Substance technical guidelines for cadmium. [Statutory Authority: Chapter 49.17 RCW. 93-07-044 (Order 93-01), § 296-62-07443, filed 3/13/93, effective 4/27/93.]

WAC 296-62-07447 Appendix D--Occupational health history interview with reference to cadmium exposure directions. [Statutory Authority: RCW 49.17.010, .040, .050, and .060. 19-01-094 (Order 16-24), § 296-62-07447, filed 12/18/2018, effective 01/19/2019. Statutory Authority: Chapter 49.17 RCW. 93-21-075 (Order 93-06), § 296-62-07447, filed 10/20/93, effective 12/1/93; 93-07-044 (Order 93-01), § 296-62-07447, filed 3/13/93, effective 4/27/93.]

WAC 296-62-07449 Appendix E--Cadmium in workplace atmospheres. [Statutory Authority: Chapter 49.17 RCW. 93-21-075 (Order 93-06), § 296-62-07449, filed 10/20/93, effective 12/1/93; 93-07-044 (Order 93-01), § 296-62-07449, filed 3/13/93, effective 4/27/93.]

WAC 296-62-07451 A short description of Appendix F to 29 CFR 1910.1027--Nonmandatory protocol for biological monitoring. [Statutory Authority: Chapter 49.17 RCW. 93-07-044 (Order 93-01), § 296-62-07451, filed 3/13/93, effective 4/27/93.]

WAC 296-62-07460 1,3-Butadiene. [Statutory Authority: RCW 49.17.010, .040, .050, and .060. 19-01-094 (Order 16-24), § 296-62-07460, filed 12/18/2018, effective 01/19/2019. Statutory Authority: RCW 49.17.010, .040, .050, and .060. 14-07-086 (Order 13-08), § 296-62-07460, filed 03/18/14, effective 05/01/14. Statutory Authority: RCW 49.17.010, .040, .050, and .060. 12-24-071 (Order 12-20), § 296-62-07460, filed 12/04/12, effective 01/04/13. Statutory Authority: Statutory Authority: RCW 49.17.010, .040, .050, and .060. 09-15-145 (Order 09-04), § 296-62-07460, filed 07/21/09, effective 09/01/09. Statutory Authority: RCW 49.17.010, .020, .040, .050, and .060. 07-03-163 (Order 06-30), § 296-62-07460, filed 01/24/07, effective 04/01/07. RCW 49.17.010, .040, .050, and .060. 05-03-093 (Order 04-41), § 296-62-07460, filed 01/18/05, effective 03/01/05. Statutory Authority: RCW 49.17.010, .040, .050, and .060. 04-10-026 (Order 03-04) § 296-62-07460, filed 04/27/04, effective 08/01/04. Statutory Authority: RCW 49.17.010, .040, .050, and .060. 03-18-090 (Order 03-15), § 296-62-07460, filed 09/02/03, effective 11/01/03. Statutory Authority: RCW 49.17.010, .040, .050. 01-11-038 (Order 99-36), § 296-62-07460, filed 05/09/01, effective 09/01/01. Statutory Authority: RCW 49.17.010, .040, .050. 99-10 (Order 98-10) § 296-62-07460, filed 05/04/99, effective 09/01/99. Statutory Authority: Statutory Authority: Chapter 49.17 RCW. 97-19-014 (Order 97-07), § 296-62-07460, filed 10/05/97, effective 11/05/97.]

WAC 296-62-07470 Methylene chloride. [Statutory Authority: RCW 49.17.010, .040, .050, and .060. 19-01-094 (Order 16-24), § 296-62-07470, filed 12/18/2018, effective 01/19/2019. Statutory Authority: RCW 49.17.010, .040, .050, and .060. 14-07-086 (Order 13-08), § 296-62-07470, filed 03/18/14, effective 05/01/14. Statutory Authority: RCW 49.17.010, .040, .050, and .060. 09-15-145 (Order 09-04), § 296-62-07470, filed 07/21/09, effective 09/01/09. Statutory Authority: RCW 49.17.010, .040, .050, and .060. 07-05-072 (Order 06-39), § 296-62-07470, filed 02/20/07, effective 04/01/07. Statutory Authority: Statutory Authority: RCW 49.17.010, .040, .050, and .060. 04-10-026 (Order 03-04) § 296-62-07470, filed 04/27/04, effective 08/01/04. Statutory Authority: RCW 49.17.010, .040, .050. 01-11-038 (Order 99-36), § 296-62-07470, filed 05/09/01, effective 09/01/01. Statutory Authority: RCW 49.17.010, .040, .050. 99-10 (Order 98-10) § 296-62-07470, filed 05/04/99, effective 09/01/99.] Statutory Authority: Statutory Authority: RCW 49.17.040, .050, .060, 97-18-062 (Order 97-08), § 296-62-07470, filed 9/2/97, effective 12/1/97.]

WAC 296-62-07473 Appendix A. Substance Safety Data Sheet and Technical Guidelines for Methylene Chloride. [Statutory Authority: RCW 49.17.010, .040, .050, and .060. 19-01-094 (Order 16-24), § 296-62-07473, filed 12/18/2018, effective 01/19/2019. Statutory Authority: RCW 49.17.010, .040, .050, and .060. 14-07-086 (Order 13-08), § 296-62-07473, filed 03/18/14, effective 05/01/14. Statutory Authority: RCW 49.17.010, .040, .050. 01-11-038 (Order 99-36), § 296-62-07473, filed 05/09/01, effective 09/01/01. Statutory Authority: RCW 49.17.040, .050, .060,97-18-062 (Order 97-08), § 296-62-07473, filed 9/2/97, effective 12/1/97.]

WAC 296-62-07475 Appendix B. Medical Surveillance for Methylene Chloride. [Statutory Authority: RCW 49.17.040, .050, .060, 97-08-062 (Order 97-08), § 296-62-07475, filed 9/2/97, effective 12/1/97.]

WAC 296-62-07477 Appendix C. Questions and answers--methylene chloride in furniture stripping. [Statutory Authority: RCW 49.17.040, .050, .060, 97-18-062 (Order 97-08), § 296-62-07477, filed 9/2/97, effective 12/1/97.]

WAC 296-62-07517 Reserved. [Statutory Authority: Chapter 49.17 RCW. 90-09-026 (Order 90-01), 296-62-07517, filed 4/10/90, effective 5/25/90; 87-24-051 (Order 87-24), 296-62-07517, filed 11/30/87. Statutory Authority: RCW 49.17.050(2) and 49.17.040. 87-10-008 (Order 87-06), 296-62-07517, filed 4/27/87. Statutory Authority: RCW 49.17.040, 49.17.050 and 49.17.240. 81-18-029 (Order 81-21), 296-62-07517, filed 8/27/81; 81-16-015 (Order 81-20), 296-62-07517, filed 7/27/81; 80-11-010 (Order 80-14), 296-62-07517, filed 8/8/80; Order 77-12, 296-62-07517, filed 7/11/77; Order 73-3, 296-62-07517, filed 5/7/73.]

WAC 296-62-07519 Thiram. [Statutory Authority: RCW 49.17.010, .040, .050, and .060. 19-01-094 (Order 16-24), § 296-62-07519, filed 12/18/2018, effective 01/19/2019. Statutory Authority: RCW 49.17.010, .040, .050. 01-11-038, (Order 99-36), § 296-62-07519, filed 05/09/01, effective 09/01/01. Statutory Authority: RCW 49.17.040, 49.17.050 and 49.17.240. 81-16-016 (Order 81-19), 296-62-07519, filed 7/27/81.]

WAC 296-62-07521 Lead. [Statutory Authority: RCW 49.17.010, .040, .050, and .060. 19-01-094 (Order 16-24), § 296-62-07521, filed 12/18/2018, effective 01/19/2019. Statutory Authority: RCW 49.17.010, .040, .050, and .060. 14-07-086 (Order 13-08), § 296-62-07521, filed 03/18/14, effective 05/01/14. Statutory Authority: RCW 49.17.010, .40, .050, and .060. 12-24-071 (Order 12-20), § 296-62-07521, filed 12/04/12, effective 01/04/13. Statutory Authority: RCW 49.17.010, .040, .050, and .060. 09-15-145 (Order 09-04), § 296-62-07521, filed 07/21/09, effective 09/01/09. Statutory Authority: RCW 49.17.010, .040, .050, and .060. 07-05-072 (Order 06-39), § 296-62-07521, filed 02/20/07, effective 04/01/07. Statutory Authority: RCW 49.17.010, .040, .050, and .060. 05-03-093 (Order 04-41), § 296-62-07521, filed 01/18/05, effective 03/01/05. Statutory Authority: RCW 49.17.010, .040, .050, and .060. 04-10-026 (Order 03-04) § 296-62-07521, filed 04/27/04, effective 08/01/04. Statutory Authority: RCW 49.17.010, .040, .050, and .060. 03-18-090 (Order 03-15), § 296-62-07521, filed 09/02/03, effective 11/01/03. Statutory Authority: RCW 49.17.010, .040, .050. 01-11-038, (Order 99-36), § 296-62-07521, filed 05/09/01, effective 09/01/01. Statutory Authority: RCW 49.17.010, .040, .050. 99-10 (Order 98-10) § 296-62-07521, filed 05/04/99, effective 09/01/99. Statutory Authority: Chapter 49.17 RCW. 96-09-030, 296-62-07521, filed 4/10/96, effective 6/1/96; 95-04-078, 296-62-07521, filed 1/30/95, effective 3/2/95; 91-24-017 (Order 91-07), 296-62-07521, filed 11/22/91, effective 12/24/91; 90-17-051 (Order 90-10), 296-62-07521, filed 8/13/90, effective 9/24/90; 90-03-029 (Order 89-20), 296-62-07521, filed 1/11/90, effective 2/26/90; 88-14-108 (Order 88-11), 296-62-07521, filed 7/6/88. Statutory Authority: RCW 49.17.040 and 49.17.050. 83-24-013 (Order 83-34), 296-62-07521, filed 11/30/83; 82-13-045 (Order 82-22), 296-62-07521, filed 6/11/82. Formerly WAC 296-62-07349.]

WAC 296-62-07531 Appendix D sampling and analytical methods for benzene monitoring and measurement procedures. [Statutory Authority: RCW 49.17.010, .040, .050, and .060. 19-01-094 (Order 16-24), § 296-62-07531, filed 12/18/2018, effective 01/19/2019. Statutory Authority: Chapter 49.17 RCW. 90-09-026 (Order 90-01), 296-62-07531, filed 4/10/90, effective 5/25/90; 89-11-035 (Order 89-03), 296-62-07531, filed 5/15/89, effective 6/30/89; 88-21-002 (Order 88-23), 296-62-07531, filed 10/6/88, effective 11/7/88.]

WAC 296-62-07540 Formaldehyde. [Statutory Authority: RCW 49.17.010, .040, .050, and .060. 19-01-094 (Order 16-24), § 296-62-07531, filed 12/18/2018, effective 01/19/2019. Statutory Authority: RCW 49.17.010, .040, .050, and .060. 14-07-086 (Order 13-08), § 296-62-07540, filed 03/18/14, effective 05/01/14. Statutory Authority: RCW 49.17.010, .040, .050, and .060. 06-08-087 (Order 05-12), § 296-62-07540, filed 04/04/06, effective 09/01/06. Statutory Authority: RCW 49.17.010, .040, .050, and .060. 05-03-093 (Order 04-41), § 296-62-07540, filed 01/18/05, effective 03/01/05. Statutory Authority: RCW 49.17.010, .040, .050, and .060. 04-10-026 (Order 03-04) § 296-62-07540, filed 04/27/04, effective 08/01/04. Statutory Authority: RCW 49.17.010, .040, .050. 02-12-098 (Order 00-20), § 296-62-07540, filed 06/05/02, effective 08/01/02. Statutory Authority: RCW 49.17.010, .040, .050. 01-11-038, (Order 99-36), § 296-62-07540, filed 05/09/01, effective 09/01/01. Statutory Authority: RCW 49.17.010, .040, .050. 99-10 (Order 98-10) § 296-62-07540, filed 05/04/99, effective 09/01/99.] Statutory Authority: Chapter 49.17 RCW. 94-15-096 (Order 94-07), 296-62-07540, filed 7/20/94, effective 9/20/94; 92-23-017 (Order 92-13), 296-62-07540, filed 11/10/92, effective 12/18/92; 91-11-070 (Order 91-01), 296-62-07540, filed 5/20/91, effective 6/20/91; 90-03-029 (Order 89-20), 296-62-07540, filed 1/11/90, effective 2/26/90; 88-21-002 (Order 88-23), 296-62-07540, filed 10/6/88, effective 11/7/88.]

WAC 296-62-07542 Appendix A--Substance technical guideline for formalin. [Statutory Authority: RCW 49.17.010, .040, .050, and .060. 19-01-094 (Order 16-24), § 296-62-07542, filed 12/18/2018, effective 01/19/2019. Statutory Authority: RCW 49.17.010, .040, .050. 99-17-094 (Order 99-01, § 296-62-07542, filed 08/17/99, effective 12/01/99. Statutory Authority: Chapter 49.17 RCW. 94-15-096 (Order 94-07), 296-62-07542, filed 7/20/94, effective 9/20/94; 92-23-017 (Order 92-13), 296-62-07542, filed 11/10/92, effective 12/18/92; 88-21-002 (Order 88-23), 296-62-07542, filed 10/6/88, effective 11/7/88.]

WAC 296-62-07544 Appendix B--Sampling strategy and analytical methods for formaldehyde. [Statutory Authority: RCW 49.17.010, .040, .050, and .060. 19-01-094 (Order 16-24), § 296-62-07544, filed 12/18/2018, effective 01/19/2019. Statutory Authority: RCW 49.17.010, .040, .050, and .060. 14-07-086 (Order 13-08), § 296-62-07544, filed 03/18/14, effective 05/01/14. Statutory Authority: Chapter 49.17 RCW. 91-11-070 (Order 91-01), 296-62-07544, filed 5/20/91, effective 6/20/91; 90-03-029 (Order 89-20), 296-62-07544, filed 1/11/90, effective 2/26/90; 89-11-035 (Order 89-03), 296-62-07544, filed 5/15/89, effective 6/30/89; 88-21-002 (Order 88-23), 296-62-07544, filed 10/6/88, effective 11/7/88.]

WAC 296-62-07546 Appendix C medical surveillance--Formaldehyde. [Statutory Authority: RCW 49.17.010, .040, .050, and .060. 19-01-094 (Order 16-24), § 296-62-07546, filed 12/18/2018, effective 01/19/2019. Statutory Authority: Chapter 49.17 RCW. 88-21-002 (Order 88-23), 296-62-07546, filed 10/6/88, effective 11/7/88.]

WAC 296-62-07548 Appendix D--Nonmandatory medical disease questionnaire. [Statutory Authority: Chapter 49.17 RCW. 88-21-002 (Order 88-23), § 296-62-07548, filed 10/6/88, effective 11/7/88.]

WAC 296-62-076 Methylenedianiline. [Statutory Authority: Chapter 49.17 RCW. 93-04-111 (Order 92-15), 296-62-076, filed 2/3/93, effective 3/15/93.]

WAC 296-62-07601 Scope and application. [Statutory Authority: RCW 49.17.010, .040, .050, and .060. 19-01-094 (Order 16-24), § 296-62-07601, filed 12/18/2018, effective 01/19/2019. Statutory Authority: RCW 49.17.010, .040, .050, and .060. 14-07-086 (Order 13-08), § 296-62-07601, filed 03/18/14, effective 05/01/14. Statutory Authority: RCW 49.17.010, .040, .050. 01-11-038, (Order 99-36), § 296-62-07601, filed 05/09/01, effective 09/01/01. Statutory Authority: Chapter 49.17 RCW. 93-04-111 (Order 92-15), 296-62-07601, filed 2/3/93, effective 3/15/93.]

WAC 296-62-07603 Definitions. [Statutory Authority: RCW 49.17.010, .040, .050, and .060. 19-01-094 (Order 16-24), § 296-62-077603, filed 12/18/2018, effective 01/19/2019. Statutory Authority: Chapter 49.17 RCW. 93-04-111 (Order 92-15), 296-62-07603, filed 2/3/93, effective 3/15/93.]

WAC 296-62-07605 Permissible exposure limits (PEL). [Statutory Authority: RCW 49.17.010, .040, .050, and .060. 19-01-094 (Order 16-24), § 296-62-07605, filed 12/18/2018, effective 01/19/2019. Statutory Authority: Chapter 49.17 RCW. 93-04-111 (Order 92-15), 296-62-07605, filed 2/3/93, effective 3/15/93.]

WAC 296-62-07607 Emergency situations. [Statutory Authority: RCW 49.17.010, .040, .050, and .060. 19-01-094 (Order 16-24), § 296-62-07607, filed 12/18/2018, effective 01/19/2019. Statutory Authority: Chapter 49.17 RCW. 93-04-111 (Order 92-15), 296-**62-07607, filed 2/3/93, effective 3/15/93.]**

WAC 296-62-07609 Exposure monitoring. [Statutory Authority: RCW 49.17.010, .040, .050, and .060. 19-01-094 (Order 16-24), § 296-62-07609, filed 12/18/2018, effective 01/19/2019. Statutory Authority: Chapter 49.17 RCW. 93-04-111 (Order 92-15), 296-62-07609, filed 2/3/93, effective 3/15/93.]

WAC 296-62-07611 Regulated areas. [Statutory Authority: RCW 49.17.010, .040, .050, and .060. 19-01-094 (Order 16-24), § 296-62-07611, filed 12/18/2018, effective 01/19/2019. Statutory Authority: Chapter 49.17 RCW. 93-04-111 (Order 92-15), 296-62-07611, filed 2/3/93, effective 3/15/93.]

WAC 296-62-07613 Methods of compliance. [Statutory Authority: RCW 49.17.010, .040, .050, and .060. 19-01-094 (Order 16-24), § 296-62-07613, filed 12/18/2018, effective 01/19/2019. Statutory Authority: Chapter 49.17 RCW. 93-04-111 (Order 92-15), 296-62-07613, filed 2/3/93, effective 3/15/93.]

WAC 296-62-07615 Respiratory protection. [Statutory Authority: RCW 49.17.010, .040, .050, and .060. 19-01-094 (Order 16-24), § 296-62-07615, filed 12/18/2018, effective 01/19/2019. Statutory Authority: RCW 49.17.010, .040, .050, and .060. 09-15-145 (Order 09-04), § 296-62-07615, filed 07/21/09, effective 09/01/09. Statutory Authority: RCW 49.17.010, .040, .050, and .060. 07-05-072 (Order 06-39), § 296-62-07615, filed 02/20/07, effective 04/01/07. Statutory Authority: RCW 49.17.010, .040, .050, and .060. 05-03-093 (Order 04-41), § 296-62-07615, filed 01/18/05, effective 03/01/05. Statutory Authority: RCW 49.17.010, .040, .050. 99-10 (Order 98-10) § 296-62-07615, filed 05/04/99, effective 09/01/99.] Statutory Authority: Chapter 49.17 RCW. 93-04-111 (Order 92-15), 296-62-07615, filed 2/3/93, effective 3/15/93.]

WAC 296-62-07617 Protective work clothing and equipment. [Statutory Authority: RCW 49.17.010, .040, .050, and .060. 19-01-094 (Order 16-24), § 296-62-07617, filed 12/18/2018, effective 01/19/2019. Statutory Authority: RCW 49.17.010, .040, .050. 01-11-038, (Order 99-36), § 296-62-07617, filed 05/09/01, effective 09/01/01. Statutory Authority: Chapter 49.17 RCW. 94-20-057 (Order 94-16), 296-62-07617, filed 9/30/94, effective 11/20/94; 93-04-111 (Order 92-15), 296-62-07617, filed 2/3/93, effective 3/15/93.]

WAC 296-62-07619 Hygiene facilities and practices. [Statutory Authority: RCW 49.17.010, .040, .050, and .060. 19-01-094 (Order 16-24), § 296-62-07619, filed 12/18/2018, effective 01/19/2019. Statutory Authority: RCW 49.17.010, .040, .050, and .060. 19-01-094 (Order 16-24), § 296-62-07617, filed 12/18/2018, effective 01/19/2019. Statutory Authority: RCW 49.17.010, .040, .050. 01-11-038, (Order 99-36), § 296-62-07617, filed 05/09/01, effective 09/01/01. Statutory Authority: Chapter 49.17 RCW. 94-20-057 (Order 94-16), 296-62-07617, filed 9/30/94, effective 11/20/94; 93-04-111 (Order 92-15), 296-62-07617, filed 2/3/93, effective 3/15/93.]

WAC 296-62-07621 Communication of hazards. [Statutory Authority: RCW 49.17.010, .040, .050, and .060. 19-01-094 (Order 16-24), § 296-62-07621, filed 12/18/2018, effective 01/19/2019. Statutory Authority: RCW 49.17.010, .040, .050, and .060. 14-07-086 (Order 13-08), § 296-62-07621, filed 03/18/14, effective 05/01/14. Statutory Authority: RCW 49.17.010, .020, .040, .050, and .060. 07-03-163 (Order 06-30), § 296-62-07621, filed 01/24/07, effective 04/01/07. Statutory Authority: RCW 49.17.010, .040, .050. 01-11-038, (Order 99-36), § 296-62-07621, filed 05/09/01, effective 09/01/01. Statutory Authority: Chapter 49.17 RCW. 93-04-111 (Order 92-15), 296-62-07621, filed 2/3/93, effective 3/15/93.]

WAC 296-62-07623 Housekeeping. [Statutory Authority: RCW 49.17.010, .040, .050, and .060. 19-01-094 (Order 16-24), § 296-62-07623, filed 12/18/2018, effective 01/19/2019. Statutory Authority: Chapter 49.17 RCW. 93-04-111 (Order 92-15), 296-62-07623, filed 2/3/93, effective 3/15/93.]

WAC 296-62-07625 Medical surveillance. [Statutory Authority: RCW 49.17.010, .040, .050, and .060. 19-01-094 (Order 16-24), § 296-62-07625, filed 12/18/2018, effective 01/19/2019. Statutory Authority: Chapter 49.17 RCW. 93-04-111 (Order 92-15), 296-62-07625, filed 2/3/93, effective 3/15/93.]

WAC 296-62-07627 Medical removal--Temporary medical removal of an employee**.** [Statutory Authority: RCW 49.17.010, .040, .050, and .060. 19-01-094 (Order 16-24), § 296-62-07627, filed 12/18/2018, effective 01/19/2019. Statutory Authority: Chapter 49.17 RCW. 93-04-111 (Order 92-15), 296-62-07627, filed 2/3/93, effective 3/15/93.]

WAC 296-62-07629 Medical removal protection benefits. [Statutory Authority: RCW 49.17.010, .040, .050, and .060. 19-01-094 (Order 16-24), § 296-62-07629, filed 12/18/2018, effective 01/19/2019. Statutory Authority: Chapter 49.17 RCW. 93-04-111 (Order 92-15), 296-62-07629, filed 2/3/93, effective 3/15/93.]

WAC 296-62-07631 Recordkeeping. [Statutory Authority: RCW 49.17.010, .040, .050, and .060. 19-01-094 (Order 16-24), § 296-62-07631, filed 12/18/2018, effective 01/19/2019. Statutory Authority: RCW 49.17.010, .040, .050, and .060. 12-24-071 (Order 12-20), § 296-62-07631, filed 12/04/12, effective 01/04/13. Statutory Authority: Statutory Authority: RCW 49.17.010, .040, .050, and .060. 04-10-026 (Order 03-04) § 296-62-07631, filed 04/27/04, effective 08/01/04. Statutory Authority: RCW 49.17.010, .040, .050. 01-11-038, (Order 99-36), § 296-62-07631, filed 05/09/01, effective 09/01/01. Statutory Authority: Chapter 49.17 RCW. 93-04-111 (Order 92-15), 296-62-07631, filed 2/3/93, effective 3/15/93.]

WAC 296-62-07633 Observation of monitoring. [Statutory Authority: RCW 49.17.010, .040, .050, and .060. 19-01-094 (Order 16-24), § 296-62-07633, filed 12/18/2018, effective 01/19/2019. Statutory Authority: Chapter 49.17 RCW. 93-04-111 (Order 92-15), 296-62-07633, filed 2/3/93, effective 3/15/93.]

WAC 296-62-07637 Appendices. [Statutory Authority: RCW 49.17.010, .040, .050, and .060. 19-01-094 (Order 16-24), § 296-62-07637, filed 12/18/2018, effective 01/19/2019. Statutory Authority: Chapter 49.17 RCW. 93-04-111 (Order 92-15), 296-62-07637, filed 2/3/93, effective 3/15/93.]

WAC 296-62-07654 Appendix A to WAC 296-62-076--Substance data sheet, for 4,4'-methylenedianiline. [Statutory Authority:: RCW 49.17.010, .040, .050, and .060. 19-01-094 (Order 16-24), § 296-62-07654, filed 12/18/2018, effective 01/19/2019. Statutory Authority: Chapter 49.17 RCW. 93-04-111 (Order 92-15), 296-62-07654, filed 2/3/93, effective 3/15/93.]

WAC 296-62-07656 Appendix B to WAC 296-62-076--Substance technical guidelines, MDA. [Statutory Authority: RCW 49.17.010, .040, .050, and .060. 19-01-094 (Order 16-24), § 296-62-07656, filed 12/18/2018, effective 01/19/2019. Statutory Authority: Chapter 49.17 RCW. 93-04-111 (Order 92-15), 296-62-07656, filed 2/3/93, effective 3/15/93.]

WAC 296-62-07658 Appendix C to WAC 296-62-076--Medical surveillance guidelines for MDA. [Statutory Authority: RCW 49.17.010, .040, .050, and .060. 19-01-094 (Order 16-24), § 296-62-07658, filed 12/18/2018, effective 01/19/2019. Statutory Authority: Chapter 49.17 RCW. 93-04-111 (Order 92-15), 296-62-07658, filed 2/3/93, effective 3/15/93.]

WAC 296-62-07660 Appendix D to WAC 296-62-076--Sampling and analytical methods for MDA monitoring and measurement procedures. [Statutory Authority: Chapter 49.17 RCW. 93-04-111 (Order 92-15), 296-62-07660, filed 2/3/93, effective 3/15/93.]

WAC 296-62-077 Asbestos, tremolite, anthophyllite, and actinolite. [Statutory Authority: RCW 49.17.050(2) and 49.17.040. 87-10-008 (Order 87-06), 296-62-077, filed 4/27/87.]

WAC 296-62-07701 Scope and application. [Statutory Authority: RCW 49.17.010, .040, .050, and .060. 19-01-094 (Order 16-24), § 296-62-07701, filed 12/18/2018, effective 01/19/2019. Statutory Authority: RCW 49.17.040, .050, RCW 49.26.040 and RCW 49.26.130. 99-17-026 (Order 98-35), § 296-62-07701, filed 08/10/99, effective 11/10/99. Statutory Authority: RCW 49.17.040, [49.17.]050 and [49.17.]060. 97-01-079, 296-62-07701, filed 12/17/96, effective 3/1/97. Statutory Authority: Chapter 49.17 RCW. 87-24-051 (Order 87-24), 296-62-07701, filed 11/30/87. Statutory Authority: RCW 49.17.050(2) and 49.17.040. 87-10-008 (Order 87-06), 296-62-07701, filed 4/27/87.]

WAC 296-62-07703 Definitions. [Statutory Authority: RCW 49.17.010, .040, .050, and .060. 19-01-094 (Order 16-24), § 296-62-07703, filed 12/18/2018, effective 01/19/2019. Statutory Authority: RCW 49.17.040, .050, RCW 49.26.040 and RCW 49.26.130. 99-17-026 (Order 98-35), § 296-62-07703, filed 08/10/99, effective 11/10/99. Statutory Authority: RCW 49.17.040, [49.17.]050 and [49.17.]060. 97-01-079, 296-62-07703, filed 12/17/96, effective 3/1/97. Statutory Authority: Chapter 49.17 RCW. 89-21-018 (Order 89-10), 296-62-07703, filed 10/10/89, effective 11/24/89; 89-11-035 (Order 89-03), 296-62-07703, filed 5/15/89, effective 6/30/89; 87-24-051 (Order 87-24), 296-62-07703, filed 11/30/87. Statutory Authority: RCW 49.17.050(2) and 49.17.040. 87-10-008 (Order 87-06), 296-62-07703, filed 4/27/87.]

WAC 296-62-07705 Permissible exposure limits (PEL). [Statutory Authority: RCW 49.17.010, .040, .050, and .060. 19-01-094 (Order 16-24), § 296-62-07705, filed 12/18/2018, effective 01/19/2019. Statutory Authority: RCW 49.17.040, [49.17.]050 and [49.17.]060. 97-01-079, 296-62-07705, filed 12/17/96, effective 3/1/97. Statutory Authority: Chapter 49.17 RCW. 89-11-035 (Order 89-03), 296-62-07705, filed 5/15/89, effective 6/30/89; 87-24-051 (Order 87-24), 296-62-07705, filed 11/30/87. Statutory Authority: RCW 49.17.050(2) and 49.17.040. 87-10-008 (Order 87-06), 296-62-07705, filed 4/27/87.]

WAC 296-62-07706 Multi-employer worksites. [Statutory Authority: RCW 49.17.010, .040, .050, and .060. 19-01-094 (Order 16-24), § 296-62-07706, filed 12/18/2018, effective 01/19/2019. Statutory Authority: RCW 49.17.040, [49.17.]050 and [49.17.]060. 97-01-079, 296-62-07706, filed 12/17/96, effective 3/1/97. Statutory Authority: Chapter 49.17 RCW. 94-16-145, 296-62-07706, filed 8/3/94, effective 9/12/94; 87-24-051 (Order 87-24), 296-62-07706, filed 11/30/87.]

WAC 296-62-07709 Exposure assessment and monitoring. [Statutory Authority: RCW 49.17.010, .040, .050, and .060. 19-01-094 (Order 16-24), § 296-62-07709, filed 12/18/2018, effective 01/19/2019. Statutory Authority: RCW 49.17.010, .040, .050, and .060. 06-05-027 (Order 05-45), § 296-62-07709, filed 02/07/06, effective 04/01/06. Statutory Authority: RCW 49.17.010, .040, .050 and RCW 49.26.130. 00-06-075 (Order 99-40), § 296-62-07709, filed 03/01/00, effective 04/10/00. Statutory Authority: RCW 49.17.040, .050, RCW 49.26.040 and RCW 49.26.130. 99-17-026 (Order 98-35), § 296-62-07709, filed 08/10/99, effective 11/10/99. Statutory Authority: RCW 49.17.040, [49.17.]050 and [49.17.]060. 97-01-079, 296-62-07709, filed 12/17/96, effective 3/1/97. Statutory Authority: Chapter 49.17 RCW. 89-11-035 (Order 89-03), 296-62-07709, filed 5/15/89, effective 6/30/89; 87-24-051 (Order 87-24), 296-62-07709, filed 11/30/87. Statutory Authority: RCW 49.17.050(2) and 49.17.040. 87-10-008 (Order 87-06), 296-62-07709, filed 4/27/87.]

WAC 296-62-07711 Regulated areas. [Statutory Authority: RCW 49.17.010, .040, .050, and .060. 19-01-094 (Order 16-24), § 296-62-07711, filed 12/18/2018, effective 01/19/2019. Statutory Authority: RCW 49.17.040, [49.17.]050 and [49.17.]060. 97-19-014, 296-62-07711, filed 9/5/97, effective 11/5/97. Statutory Authority: RCW 49.17.040, [49.17.]050 and [49.17.]060. 97-01-079, 296-62-07711, filed 12/17/96, effective 3/1/97. Statutory Authority: Chapter 49.17 RCW. 95-04-007, 296-62-07711, filed 1/18/95, effective 3/1/95; 93-19-142 (Order 93-04), 296-62-07711, filed 9/22/93, effective 11/1/93; 89-11-035 (Order 89-03), 296-62-07711, filed 5/15/89, effective 6/30/89; 87-24-051 (Order 87-24), 296-62-07711, filed 11/30/87. Statutory Authority: RCW 49.17.050(2) and 49.17.040. 87-10-008 (Order 87-06), 296-62-07711, filed 4/27/87.]

WAC 296-62-07712 Requirements for asbestos activities in construction and shipyard work. [Statutory Authority: RCW 49.17.010, .040, .050, and .060. 19-01-094 (Order 16-24), § 296-62-07712, filed 12/18/2018, effective 01/19/2019. Statutory Authority: RCW 49.17.010, .040, .050, and .060. 06-05-027 (Order 05-45), § 296-62-07712, filed 02/07/06, effective 04/01/06. Statutory Authority: RCW 49.17.040, .050, RCW 49.26.040 and RCW 49.26.130. 99-17-026 (Order 98-35), § 296-62-07712, filed 08/10/99, effective 11/10/99. Statutory Authority: RCW 49.17.040, [49.17.]050 and [49.17.]060. 97-19-014, 296-62-07712, filed 9/5/97, effective 11/5/97; 97-01-079, 296-62-07712, filed 12/17/96, effective 3/1/97. Statutory Authority: Chapter 49.17 RCW. 89-21-018 (Order 89-10), 296-62-07712, filed 10/10/89, effective 11/24/89; 89-11-035 (Order 89-03), 296-62-07712, filed 5/15/89, effective 6/30/89; 87-24-051 (Order 87-24), 296-62-07712, filed 11/30/87.]

WAC 296-62-07713 Methods of compliance for asbestos activities in general industry. [Statutory Authority: RCW 49.17.010, .040, .050, and .060. 19-01-094 (Order 16-24), § 296-62-07713, filed 12/18/2018, effective 01/19/2019. Statutory Authority: RCW 49.17.010, .040, .050 and RCW 49.26.130. 00-06-075 (Order 99-40), § 296-62-07713, filed 03/01/00, effective 04/10/00. Statutory Authority: RCW 49.17.040, .050, RCW 49.26.040 and RCW 49.26.130. 99-17-026 (Order 98-35), § 296-62-07713, filed 08/10/99, effective 11/10/99. Statutory Authority: RCW 49.17.040, [49.17.]050 and [49.17.]060. 97-01-079, 296-62-07713, filed 12/17/96, effective 3/1/97. Statutory Authority: Chapter 49.17 RCW. 90-17-051 (Order 90-10), 296-62-07713, filed 8/13/90, effective 9/24/90; 89-11-035 (Order 89-03), 296-62-07713, filed 5/15/89, effective 6/30/89; 87-24-051 (Order 87-24), 296-62-07713, filed 11/30/87. Statutory Authority: RCW 49.17.050(2) and 49.17.040. 87-10-008 (Order 87-06), 296-62-07713, filed 4/27/87.]

WAC 296-62-07715 Respiratory protection. [Statutory Authority: RCW 49.17.010, .040, .050, and .060. 19-01-094 (Order 16-24), § 296-62-07715, filed 12/18/2018, effective 01/19/2019. Statutory Authority: RCW 49.17.010, .040, .050, and .060. 09-15-145 (Order 09-04), § 296-62-07715, filed 07/21/09, effective 09/01/09. Statutory Authority: RCW 49.17.010, .040, .050, and .060. 07-05-072 (Order 06-39), § 296-62-07715, filed 02/20/07, effective 04/01/07. Statutory Authority: RCW 49.17.010, .040, .050. 99-10 (Order 98-10) § 296-62-07715, filed 05/04/99, effective 09/01/99.] Statutory Authority: RCW 49.17.040, [49.17.]050 and [49.17.]060. 97-19-014, 296-62-07715, filed 9/5/97, effective 11/5/97; 97-01-079, 296-62-07715, filed 12/17/96, effective 3/1/97. Statutory Authority: Chapter 49.17 RCW. 91-03-044 (Order 90-18), 296-62-07715, filed 1/10/91, effective 2/12/91; 89-11-035 (Order 89-03), 296-62-07715, filed 5/15/89, effective 6/30/89; 87-24-051 (Order 87-24), 296-62-07715, filed 11/30/87. Statutory Authority: RCW 49.17.050(2) and 49.17.040. 87-10-008 (Order 87-06), 296-62-07715, filed 4/27/87.]

WAC 296-62-07717 Protective work clothing and equipment. [Statutory Authority: RCW 49.17.010, .040, .050, and .060. 19-01-094 (Order 16-24), § 296-62-07717, filed 12/18/2018, effective 01/19/2019. Statutory Authority: RCW 49.17.010, .040, .050, and .060. 14-07-086 (Order 13-08), § 296-62-07717, filed 03/18/14, effective 05/01/14. Statutory Authority: RCW 49.17.010, .040, .050. 01-11-038, (Order 99-36), § 296-62-07717, filed 05/09/01, effective 09/01/01. Statutory Authority: RCW 49.17.040, [49.17.]050 and [49.17.]060. 97-19-014, 296-62-07717, filed 9/5/97, effective 11/5/97; 97-01-079, 296-62-07717, filed 12/17/96, effective 3/1/97. Statutory Authority: Chapter 49.17 RCW. 94-15-096 (Order 94-07), 296-62-07717, filed 7/20/94, effective 9/20/94; 89-11-035 (Order 89-03), 296-62-07717, filed 5/15/89, effective 6/30/89; 87-24-051 (Order 87-24), 296-62-07717, filed 11/30/87. Statutory Authority: RCW 49.17.050(2) and 49.17.040. 87-10-008 (Order 87-06), 296-62-07717, filed 4/27/87.]

WAC 296-62-07719 Hygiene facilities and practices. [Statutory Authority: RCW 49.17.010, .040, .050, and .060. 19-01-094 (Order 16-24), § 296-62-07719, filed 12/18/2018, effective 01/19/2019. Statutory Authority: RCW 49.17.010, .040, .050, and .060. 03-18-090 (Order 03-15), § 296-62-07719, filed 09/02/03, effective 111/01/03. Statutory Authority: RCW 49.17.040, [49.17.]050 and [49.17.]060. 97-01-079, 296-62-07719, filed 12/17/96, effective 3/1/97. Statutory Authority: Chapter 49.17 RCW. 91-03-044 (Order 90-18), 296-62-07719, filed 1/10/91, effective 2/12/91; 89-11-035 (Order 89-03), 296-62-07719, filed 5/15/89, effective 6/30/89; 87-24-051 (Order 87-24), 296-62-07719, filed 11/30/87. Statutory Authority: RCW 49.17.050(2) and 49.17.040. 87-10-008 (Order 87-06), 296-62-07719, filed 4/27/87.]

WAC 296-62-07721 Communication of hazards. [Statutory Authority: RCW 49.17.010, .040, .050, and .060. 19-01-094 (Order 16-24), § 296-62-07721, filed 12/18/2018, effective 01/19/2019. Statutory Authority: RCW 49.17.010, .040, .050, and .060. 14-07-086 (Order 13-08), § 296-62-07721, filed 03/18/14, effective 05/01/14. Statutory Authority: RCW 49.17.010, .040, .050. 01-11-038, (Order 99-36), § 296-62-07721, filed 05/09/01, effective 09/01/01. Statutory Authority: RCW 49.17.040, .050, RCW 49.26.040 and RCW 49.26.130. 99-17-026 (Order 98-35), § 296-62-07721, filed 08/10/99, effective 11/10/99. Statutory Authority: RCW 49.17.040, [49.17.]050 and [49.17.]060. 97-19-014, 296-62-07721, filed 9/5/97, effective 11/5/97; 97-01-079, 296-62-07721, filed 12/17/96, effective 3/1/97. Statutory Authority: Chapter 49.17 RCW. 93-01-005 (Order 92-20), 296-62-07721, filed 12/2/92, effective 1/15/93; 91-03-044 (Order 90-18), 296-62-07721, filed 1/10/91, effective 2/12/91; 89-21-018 (Order 89-10), 296-62-07721, filed 10/10/89, effective 11/24/89; 89-11-035 (Order 89-03), 296-62-07721, filed 5/15/89, effective 6/30/89; 87-24-051 (Order 87-24), 96-62-07721, filed 11/30/87. Statutory Authority: RCW 49.17.050(2) and 49.17.040. 87-10-008 (Order 87-06), 296-62-07721, filed 4/27/87.]

WAC 296-62-07722 Employee information and training. [Statutory Authority: RCW 49.17.010, .040, .050, and .060. 19-01-094 (Order 16-24), § 296-62-07722, filed 12/18/2018, effective 01/19/2019. Statutory Authority: RCW 49.17.010, .040, .050, and .060. 05-03-093 (Order 04-41), § 296-62-07722, filed 01/18/05, effective 03/01/05. Statutory Authority: RCW 49.17.010, .040, .050 and RCW 49.26.130. 00-06-075 (Order 99-40), § 296-62-07722, filed 03/01/00, effective 04/10/00. Statutory Authority: RCW 49.17.040, .050, RCW 49.26.040 and RCW 49.26.130. 99-17-026 (Order 98-35), § 296-62-07722, filed 08/10/99, effective 11/10/99. Statutory Authority: RCW 49.17.010, .040, .050. 99-10 (Order 98-10) § 296-62-07222, filed 05/04/99, effective 09/01/99.] Statutory Authority: RCW 49.17.040, [49.17.]050 and [49.17.]060. 97-01-079, 296-62-07722, filed 12/17/96, effective 3/1/97.]

WAC 296-62-07723 Housekeeping. [Statutory Authority: RCW 49.17.010, .040, .050, and .060. 19-01-094 (Order 16-24), § 296-62-07723, filed 12/18/2018, effective 01/19/2019. Statutory Authority: RCW 49.17.040, [49.17.]050 and [49.17.]060. 97-01-079, 296-62-07723, filed 12/17/96, effective 3/1/97. Statutory Authority: Chapter 49.17 RCW. 87-24-051 (Order 87-24), 296-62-07723, filed 11/30/87. Statutory Authority: RCW 49.17.050(2) and 49.17.040. 87-10-008 (Order 87-06), 296-62-07723, filed 4/27/87.]

WAC 296-62-07725 Medical surveillance. [Statutory Authority: RCW 49.17.010, .040, .050, and .060. 19-01-094 (Order 16-24), § 296-62-07725, filed 12/18/2018, effective 01/19/2019. Statutory Authority: RCW 49.17.010, .040, .050, and .060. 06-05-027 (Order 05-45), § 296-62-07725, filed 02/07/06, effective 04/01/06. Statutory Authority: RCW 49.17.040, [49.17.]050 and [49.17.]060. 97-19-014, 296-62-07725, filed 9/5/97, effective 11/5/97; 97-01-079, 296-62-07725, filed 12/17/96, effective 3/1/97. Statutory Authority: Chapter 49.17 RCW. 91-03-044 (Order 90-18), 296-62-07725, filed 1/10/91, effective 2/12/91; 89-11-035 (Order 89-03), 296-62-07725, filed 5/15/89, effective 6/30/89; 87-24-051 (Order 87-24), 296-62-07725, filed 11/30/87. Statutory Authority: RCW 49.17.050(2) and 49.17.040. 87-10-008 (Order 87-06), 296-62-07725, filed 4/27/87.]

WAC 296-62-07727 Recordkeeping. [Statutory Authority: RCW 49.17.010, .040, .050, and .060. 19-01-094 (Order 16-24), § 296-62-07727, filed 12/18/2018, effective 01/19/2019. Statutory Authority: RCW 49.17.010, .040, .050, and .060. 04-10-026 (Order 03-04) § 296-62-07727, filed 04/27/04, effective 08/01/04. Statutory Authority: RCW 49.17.010, .040, .050 and RCW 49.26.130. 00-06-075 (Order 99-40), § 296-62-07727, filed 03/01/00, effective 04/10/00. Statutory Authority: Statutory Authority: RCW 49.17.040, [49.17.]050 and [49.17.]060. 97-01-079, 296-62-07727, filed 12/17/96, effective 3/1/97. Statutory Authority: Chapter 49.17 RCW. 87-24-051 (Order 87-24), 296-62-07727, filed 11/30/87. Statutory Authority: RCW 49.17.050(2) and 49.17.040. 87-10-008 (Order 87-06), 296-62-07727, filed 4/27/87.]

WAC 296-62-07728 Competent person. [Statutory Authority: RCW 49.17.010, .040, .050, and .060. 19-01-094 (Order 16-24), § 296-62-07728, filed 12/18/2018, effective 01/19/2019. Statutory Authority: RCW 49.17.040, .050, RCW 49.26.040 and RCW 49.26.130. 99-17-026 (Order 98-35), § 296-62-07728, filed 08/10/99, effective 11/10/99. Statutory Authority: RCW 49.17.040, [49.17.]050 and [49.17.]060. 97-19-014, 296-62-07728, filed 9/5/97, effective 11/5/97; 97-01-079, 296-62-07728, filed 12/17/96, effective 3/1/97.]

WAC 296-62-07733 Appendices. [Statutory Authority: RCW 49.17.010, .040, .050. 99-10 (Order 98-10) § 296-62-07733, filed 05/04/99, effective 09/01/99. Statutory Authority: RCW 49.17.040, [49.17.]050 and [49.17.]060. 97-01-079, 296-62-07733, filed 12/17/96, effective 3/1/97. Statutory Authority: Chapter 49.17 RCW. 91-03-044 (Order 90-18), 296-62-07733, filed 1/10/91, effective 2/12/91; 87-24-051 (Order 87-24), 296-62-07733, filed 11/30/87. Statutory Authority: RCW 49.17.050(2) and 49.17.040. 87-10-008 (Order 87-06), 296-62-07733, filed 4/27/87.]

WAC 296-62-07735 Appendix A--WISHA reference method--Mandatory. [Statutory Authority: RCW 49.17.010, .040, .050. 99-10 (Order 98-10) § 296-62-07735, filed 05/04/99, effective 09/01/99. Statutory Authority: RCW 49.17.040, .050, RCW 49.26.040 and RCW 49.26.130. 99-17-026 (Order 98-35), § 296-62-07735, filed 08/10/99, effective 11/10/99. Statutory Authority: RCW 49.17.040, [49.17.]050 and [49.17.]060. 97-01-079, 296-62-07735, filed 12/17/96, effective 3/1/97. Statutory Authority: Chapter 49.17 RCW. 87-24-051 (Order 87-24), 296-62-07735, filed 11/30/87. Statutory Authority: RCW 49.17.050(2) and 49.17.040. 87-10-008 (Order 87-06), 296-62-07735, filed 4/27/87.]

WAC 296-62-07737 Appendix B--Detailed procedure for asbestos sampling and analysis--Nonmandatory. [Statutory Authority: RCW 49.17.010, .040, .050, and .060. 19-01-094 (Order 16-24), § 296-62-07737, filed 12/18/2018, effective 01/19/2019. Statutory Authority: RCW 49.17.040, .050, RCW 49.26.040 and RCW 49.26.130. 99-17-026 (Order 98-35), § 296-62-07737, filed 08/10/99, effective 11/10/99. Statutory Authority: RCW 49.17.040, [49.17.]050 and [49.17.]060. 97-01-079, 296-62-07737, filed 12/17/96, effective 3/1/97. Statutory Authority: Chapter 49.17 RCW. 87-24-051 (Order 87-24), 296-62-07737, filed 11/30/87. Statutory Authority: RCW 49.17.050(2) and 49.17.040. 87-10-008 (Order 87-06), 296-62-07737, filed 4/27/87.]

WAC 296-62-07741 Appendix D--Medical questionnaires--Mandatory. [Statutory Authority: RCW 49.17.040, [49.17.]050 and [49.17.]060. 97-01-079, 296-62-07741, filed 12/17/96, effective 3/1/97. Statutory Authority: Chapter 49.17 RCW. 87-24-051 (Order 87-24), 296-62-07741, filed 11/30/87. Statutory Authority: RCW 49.17.050(2) and 49.17.040. 87-10-008 (Order 87-06), 296-62-07741, filed 4/27/87.]

WAC 296-62-07743 Appendix E--Interpretation and classification of chest roentgenograms--Mandatory. [Statutory Authority: Statutory Authority: RCW 49.17.010, .040, .050, and .060. 19-01-094 (Order 16-24), § 296-62-07743, filed 12/18/2018, effective 01/19/2019. Chapter 49.17 RCW. 87-24-051 (Order 87-24), 296-62-07743, filed 11/30/87. Statutory Authority: RCW 49.17.050(2) and 49.17.040. 87-10-008 (Order 87-06), 296-62-07743, filed 4/27/87.]

WAC 296-62-07745 Appendix F--Work practices and engineering controls for automotive brake and clutch inspection, disassembly, repair and assembly--Mandatory. [Statutory Authority: RCW 49.17.010, .040, .050, and .060. 19-01-094 (Order 16-24), § 296-62-07745, filed 12/18/2018, effective 01/19/2019. Statutory Authority: RCW 49.17.010, .040, .050 and RCW 49.26.130. 00-06-075 (Order 99-40), § 296-62-07745, filed 03/01/00, effective 04/10/00. Statutory Authority: RCW 49.17.040, [49.17.]050 and [49.17.]060. 97-01-079, 296-62-07745, filed 12/17/96, effective 3/1/97. Statutory Authority: Chapter 49.17 RCW. 89-11-035 (Order 89-03), 296-62-07745, filed 5/15/89, effective 6/30/89; 87-24-051 (Order 87-24), 296-62-07745, filed 11/30/87. Statutory Authority: RCW 49.17.050(2) and 49.17.040. 87-10-008 (Order 87-06), 296-62-07745, filed 4/27/87.]

WAC 296-62-07747 Appendix G--Substance technical information for asbestos--Nonmandatory. [Statutory Authority: RCW 49.17.010, .040, .050, and .060. 19-01-094 (Order 16-24), § 296-62-07747, filed 12/18/2018, effective 01/19/2019. Statutory Authority: RCW 49.17.040, [49.17.]050 and [49.17.]060. 97-01-079, 296-62-07747, filed 12/17/96, effective 3/1/97. Statutory Authority: Chapter 49.17 RCW. 89-11-035 (Order 89-03), 296-62-07747, filed 5/15/89, effective 6/30/89; 87-24-051 (Order 87-24), 296-62-07747, filed 11/30/87. Statutory Authority: RCW 49.17.050(2) and 49.17.040. 87-10-008 (Order 87-06), 296-62-07747, filed 4/27/87.]

WAC 296-62-07749 Appendix H--Medical surveillance guidelines for asbestos--Nonmandatory. [Statutory Authority: RCW 49.17.040, [49.17.]050 and [49.17.]060. 97-01-079, 296-62-07749, filed 12/17/96, effective 3/1/97. Statutory Authority: Chapter 49.17 RCW. 94-15-096 (Order 94-07), 296-62-07749, filed 7/20/94, effective 9/20/94; 87-24-051 (Order 87-24), 296-62-07749, filed 11/30/87. Statutory Authority: RCW 49.17.050(2) and 49.17.040. 87-10-008 (Order 87-06), 296-62-07749, filed 4/27/87.]

WAC 296-62-07751 Appendix I--Work practices and engineering controls for Class I asbestos operations--Nonmandatory. [Statutory Authority: RCW 49.17.040, [49.17.]050 and [49.17.]060. 97-01-079, 296-62-07751, filed 12/17/96, effective 3/1/97. Statutory Authority: Chapter 49.17 RCW. 94-15-096 (Order 94-07), 296-62-07751, filed 7/20/94, effective 9/20/94; 87-24-051 (Order 87-24), 296-62-07751, filed 11/30/87.]

WAC 296-62-07753 Appendix J--Polarized light microscopy of asbestos--Nonmandatory. [Statutory Authority: RCW 49.17.040, [49.17.]050 and [49.17.]060. 97-01-079, 296-62-07753, filed 12/17/96, effective 3/1/97. Statutory Authority: Chapter 49.17 RCW. 89-21-018 (Order 89-10), 296-62-07753, filed 10/10/89, effective 11/24/89; 87-24-051 (Order 87-24), 296-62-07753, filed 11/30/87.]

WAC 296-62-07755 Appendix K--Smoking cessation program information for asbestos, tremolite, anthophyllite, and actinolite--Nonmandatory. [Statutory Authority: Chapter 49.17 RCW. 91-03-044 (Order 90-18), 296-62-07755, filed 1/10/91, effective 2/12/91.]

WAC 296-62-080 Hexavalent chromium. [Statutory Authority: RCW 49.17.010, .040, .050, and .060. 06-16-106, (Order 06-13), § 296-62-080, filed 08/12/06, effective 09/01/06.

WAC 296-62-08003 Hexavalent chromium. Scope. [Statutory Authority: RCW 49.17.010, .040, .050, and .060. 19-01-094 (Order 16-24), § 296-62-08003, filed 12/18/2018, effective 01/19/2019. Statutory Authority: RCW 49.17.010, .040, .050, and .060. 06-16-106, (Order 06-13), § 296-62-08003, filed 08/12/06, effective 09/01/06.

WAC 296-62-08005 Definitions. Statutory Authority: RCW 49.17.010, .040, .050, and .060. 19-01-094 (Order 16-24), § 296-62-08005, filed 12/18/2018, effective 01/19/2019. Statutory Authority: RCW 49.17.010, .040, .050, and .060. 06-16-106, (Order 06-13), § 296-62-08005, filed 08/12/06, effective 09/01/06.

WAC 296-62-08007 Permissible exposure limit (PEL). [Statutory Authority: RCW 49.17.010, .040, .050, and .060. 19-01-094 (Order 16-24), § 296-62-08007, filed 12/18/2018, effective 01/19/2019. Statutory Authority: RCW 49.17.010, .040, .050, and .060. 06-16-106, (Order 06-13), § 296-62-08007, filed 08/12/06, effective 09/0106.

WAC 296-62-08009 Exposure determination. [Statutory Authority: RCW 49.17.010, .040, .050, and .060. 19-01-094 (Order 16-24), § 296-62-08009, filed 12/18/2018, effective 01/19/2019. Statutory Authority: RCW 49.17.010, .040, .050, and .060. 10-24-119 (Order 10-40), § 296-62-08009, filed 12/01/10, effective 01/01/11. Statutory Authority: RCW 49.17.010, .040, .050, and .060. 06-16-106, (Order 06-13), § 296-62-08009, filed 08/12/06, effective 09/01/06.

WAC 296-62-08011 Regulated areas. [Statutory Authority: RCW 49.17.010, .040, .050, and .060. 19-01-094 (Order 16-24), § 296-62-08011, filed 12/18/2018, effective 01/19/2019. Statutory Authority: RCW 49.17.010, .040, .050, and .060. 06-16-106, (Order 06-13), § 296-62-08011, filed 08/12/06, effective 09/01/06.

WAC 296-62-08013 Methods of compliance. [Statutory Authority: RCW 49.17.010, .040, .050, and .060. 19-01-094 (Order 16-24), § 296-62-08013, filed 12/18/2018, effective 01/19/2019. [Statutory Authority: RCW 49.17.010, .040, .050, and .060. 06-16-106, (Order 06-13), § 296-62-08013, filed 08/12/06, effective 09/01/06.

WAC 296-62-08015 Respiratory protection. [Statutory Authority: RCW 49.17.010, .040, .050, and .060. 19-01-094 (Order 16-24), § 296-62-08015, filed 12/18/2018, effective 01/19/2019. Statutory Authority: RCW 49.17.010, .040, .050, and .060. 09-15-145, (Order 09-04), § 296-62-08015, filed 07/21/09, effective 09/01/09. Statutory Authority: RCW 49.17.010, .040, .050, and .060. 06-16-106, (Order 06-13), § 296-62-08015, filed 08/12/06, effective 09/01/06.

WAC 296-62-08017 Protective work clothing and equipment. [Statutory Authority: RCW 49.17.010, .040, .050, and .060. 19-01-094 (Order 16-24), § 296-62-08017, filed 12/18/2018, effective 01/19/2019. Statutory Authority: RCW 49.17.010, .040, .050, and .060. 14-07-086 (Order 13-08), § 296-62-08017, filed 03/18/14, effective 05/01/14. Statutory Authority: RCW 49.17.010, .040, .050, and .060. 06-16-106, (Order 06-13), § 296-62-08017, filed 08/12/06, effective 09/01/06.

WAC 296-62-08019 Hygiene areas and practices. [Statutory Authority: RCW 49.17.010, .040, .050, and .060. 19-01-094 (Order 16-24), § 296-62-08019, filed 12/18/2018, effective 01/19/2019. Statutory Authority: RCW 49.17.010, .040, .050, and .060. 06-16-106, (Order 06-13), § 296-62-08019, filed 08/12/06, effective 09/01/06.

WAC 296-62-08021 Housekeeping. [Statutory Authority: RCW 49.17.010, .040, .050, and .060. 19-01-094 (Order 16-24), § 296-62-08021, filed 12/18/2018, effective 01/19/2019. Statutory Authority: RCW 49.17.010, .040, .050, and .060. 14-07-086 (Order 13-08), § 296-62-08021, filed 03/18/14, effective 05/01/14. Statutory Authority: RCW 49.17.010, .040, .050, and .060. 06-16-106, (Order 06-13), § 296-62-08021, filed 08/12/06, effective 09/01/06.

WAC 296-62-08023 Medical surveillance. [Statutory Authority: RCW 49.17.010, .040, .050, and .060. 19-01-094 (Order 16-24), § 296-62-08023, filed 12/18/2018, effective 01/19/2019. Statutory Authority: RCW 49.17.010, .040, .050, and .060. 06-16-106, (Order 06-13), § 296-62-08023, filed 08/12/06, effective 09/01/06.

WAC 296-62-08025 Communication of chromium (VI) hazards. [Statutory Authority: RCW 49.17.010, .040, .050, and .060. 19-01-094 (Order 16-24), § 296-62-08025, filed 12/18/2018, effective 01/19/2019. Statutory Authority: RCW 49.17.010, .040, .050, and .060. 14-07-086 (Order 13-08), § 296-62-08025, filed 03/18/14, effective 05/01/14. Statutory Authority: RCW 49.17.010, .040, .050, and .060. 06-16-106, (Order 06-13), § 296-62-08025, filed 08/12/06, effective 09/01/06.

WAC 296-62-08027 Recordkeeping. [Statutory Authority: RCW 49.17.010, .040, .050, and .060. 19-01-094 (Order 16-24), § 296-62-08025, filed 12/18/2018, effective 01/19/2019. Statutory Authority: RCW 49.17.010, .040, .050, and .060. 06-16-106, (Order 06-13), § 296-62-08027, filed 08/12/06, effective 09/01/06.

WAC 296-62-08029 Dates. [Statutory Authority: RCW 49.17.010, .040, .050, and .060. 19-01-094 (Order 16-24), § 296-62-08025, filed 12/18/2018, effective 01/19/2019. Statutory Authority: RCW 49.17.010, .040, .050, and .060. 06-16-106, (Order 06-13), § 296-62-08029, filed 08/12/06, effective 09/01/06.

WAC 296-62-090 Physical agents. [Order 73-3, 296-62-090, filed 5/7/73; Order 70-8, 296-62-090, filed 7/31/70, effective 9/1/70; Rule 9.010, effective 8/1/63.]

WAC 296-62-09001 Definitions. [Statutory Authority: RCW 49.17.010, .040, .050, and .060. 19-01-094 (Order 16-24), § 296-62-09001, filed 12/18/2018, effective 01/19/2019. Statutory Authority: RCW 49.17.010, [49.17].040, and [49.17].050. WSR 01-17-033, § 296-62-09001, filed 8/8/01, effective 9/1/01. Statutory Authority: RCW 49.17.040 and 49.17.050. WSR 85-01-022 (Order 84-24), § 296-62-09001, filed 12/11/84; Order 73-3, § 296-62-09001, filed 5/7/73.]

WAC 296-62-09004 Ionizing radiation. [Statutory Authority: RCW 49.17.010, .040, .050, and .060. 19-01-094 (Order 16-24), § 296-62-09004, filed 12/18/2018, effective 01/19/2019. Statutory Authority: RCW 49.17.040 and 49.17.050. 85-01-022 (Order 84-24), 296-62-09004, filed 12/11/84; Order 75-15, 296-62-09004, filed 4/18/75.]

WAC 296-62-09005 Nonionizing radiation. [Statutory Authority: RCW 49.17.010, .040, .050, and .060. 19-01-094 (Order 16-24), § 296-62-09005, filed 12/18/2018, effective 01/19/2019. Statutory Authority: Chapter 49.17 RCW and RCW 49.17.040, [49.17].050 and [49.17].060. 92-22-067 (Order 92-06), 296-62-09005, filed 10/30/92, effective 12/8/92. Statutory Authority: RCW 49.17.040 and 49.17.050. 85-01-022 (Order 84-24), 296-62-09005, filed 12/11/84. Statutory Authority: RCW 49.17.040. 80-16-029 (Order 80-22), 296-62-09005, filed 10/31/80. Statutory Authority: RCW 49.17.040, 49.17.050 and 49.17.240. 80-11-010 (Order 80-14), 296-62-09005, filed 8/8/80; Order 73-3, 296-62-09005, filed 5/7/73.]

WAC 296-62-09007 Pressure. [Statutory Authority: RCW 49.17.010, .040, .050, and .060. 19-01-094 (Order 16-24), § 296-62-09007, filed 12/18/2018, effective 01/19/2019. Statutory Authority: Chapter 49.17 RCW. 91-11-070 (Order 91-01), 296-62-09007, filed 5/20/91, effective 6/20/91; Order 73-3, 296-62-09007, filed 5/7/73.]

WAC 296-62-09009 Vibration. [Statutory Authority: RCW 49.17.010, .040, .050, and .060. 19-01-094 (Order 16-24), § 296-62-09009, filed 12/18/2018, effective 01/19/2019. Order 73-3, 296-62-09009, filed 5/7/73.]

WAC 296-62-09013 Temperature, radiant heat, or temperature-humidity combinations. [Statutory Authority: RCW 49.17.010, .040, .050, and .060. 19-01-094 (Order 16-24), § 296-62-09013, filed 12/18/2018, effective 01/19/2019. Statutory Authority: RCW 49.17.010, 49.17.040, 49.17.050 and 49.17.060. 06-11-144 (Order 06-15), 296-62-09013, filed 05/23/06; Order 73-3, 296-62-09013, filed 5/7/73.]

WAC 296-62-095 Outdoor heat exposure. [Statutory Authority: RCW 49.17.010, .040, .050, and .060. 08-12-109 (Order 06-40), 296-62-095, filed 06/04/08, effective 07/07/08.

WAC 296-62-09510 Scope and purpose. [Statutory Authority: RCW 49.17.010, .040, .050, and .060. 19-01-094 (Order 16-24), § 296-62-09510, filed 12/18/2018, effective 01/19/2019. Statutory Authority: RCW 49.17.010, .040, .050, and .060. 08-12-109 (Order 06-40), 296-62-09510, filed 06/04/08, effective 07/05/08.

WAC 296-62-09520 Definitions. [Statutory Authority: RCW 49.17.010, .040, .050, and .060. 19-01-094 (Order 16-24), § 296-62-09520, filed 12/18/2018, effective 01/19/2019. Statutory Authority: RCW 49.17.010, .040, .050, and .060. 08-12-109 (Order 06-40), 296-62-09520, filed 06/04/08, effective 07/05/08.

WAC 296-62-09530 Employer and employee responsibility. [Statutory Authority: RCW 49.17.010, .040, .050, and .060. 08-12-109 (Order 06-40), 296-62-09530, filed 06/04/08, effective 07/05/08.

WAC 296-62-09540 Drinking water. [Statutory Authority: RCW 49.17.010, .040, .050, and .060. 08-12-109 (Order 06-40), 296-62-09540, filed 06/04/08, effective 07/05/08.

WAC 296-62-09550 Responding to signs and symptoms of heat-related illness. [Statutory Authority: RCW 49.17.010, .040, .050, and .060. 08-12-109 (Order 06-40), 296-62-09550, filed 06/04/08, effective 07/05/08.

WAC 296-62-09560 Information and training. [Statutory Authority: RCW 49.17.010, .040, .050, and .060. 08-12-109 (Order 06-40), 296-62-09560, filed 06/04/08, effective 07/05/08.

WAC 296-62-11015 Abrasive blasting. [Statutory Authority: RCW 49.17.010, 49.17.040, 49.17.050, 49.17.060. WSR 06-12-074, § 296-62-11015, filed 6/6/06, effective 9/1/06. Statutory Authority: RCW 49.17.040, [49.17].050 and [49.17].060. WSR 98-02-006, § 296-62-11015, filed 12/26/97, effective 3/1/98. Statutory Authority: Chapter 49.17 RCW. WSR 91-24-017 (Order 91-07), § 296-62-11015, filed 11/22/91, effective 12/24/91. RCW 49.17.040, 49.17.050, and 49.17.240. WSR 81-16-015 (Order 81-20), § 296-62-11015, filed 7/27/81; WSR 80-11-010 (Order 80-14), § 296-62-11015, filed 8/8/80; Order 73-3, § 296-62-11015, filed 5/7/73.]

WAC 296-62-11019 Spray-finishing operations. [Statutory Authority: RCW 49.17.010, .040, .050, and .060. 19-01-094 (Order 16-24), § 296-62-11019, filed 12/18/2018, effective 01/19/2019. Statutory Authority: RCW 49.17.010, .040, .050. 99-10 (Order 98-10) § 296-62-11019, filed 05/04/99, effective 09/01/99.] Statutory Authority: RCW 49.17.040, 49.17.050, and 49.17.240. 81-16-015 (Order 81-20), 296-62-11019, filed 7/27/81; Order 73-3, 296-62-11019, filed 5/7/73.

WAC 296-62-135 Oxygen deficient atmospheres.. [Statutory Authority: RCW 49.17.010, .040, .050, and .060. 19-01-094 (Order 16-24), § 296-62-135, filed 12/18/2018, effective 01/19/2019. Statutory Authority: RCW 49.17.010, 49.17.040, 49.17.050, 49.17.060. WSR 07-23-072, § 296-62-135, filed 11/19/07, effective 1/2/08.]

WAC 296-62-136 Ventilation. [Statutory Authority: RCW 49.17.010, 49.17.040, 49.17.050, 49.17.060. WSR 07-23-072, § 296-62-136, filed 11/19/07, effective 1/2/08.]

WAC 296-62-13605 Definition. [Statutory Authority: RCW 49.17.010, .040, .050, and .060. 19-01-094 (Order 16-24), § 296-62-13610, filed 12/18/2018, effective 01/19/2019. Statutory Authority: RCW 49.17.010, 49.17.040, 49.17.050, 49.17.060. WSR 07-23-072, § 296-62-13605, filed 11/19/07, effective 1/2/08.]

WAC 296-62-13610 Ventilation guide. [Statutory Authority: RCW 49.17.010, 49.17.040, 49.17.050, 49.17.060. WSR 07-23-072, § 296-62-13610, filed 11/19/07, effective 1/2/08.]

WAC 296-62-13615 Adequate system. [Statutory Authority: RCW 49.17.010, .040, .050, and .060. 19-01-094 (Order 16-24), § 296-62-13615, filed 12/18/2018, effective 01/19/2019. Statutory Authority: RCW 49.17.010, 49.17.040, 49.17.050, 49.17.060. WSR 07-23-072, § 296-62-13615, filed 11/19/07, effective 1/2/08.]

WAC 296-62-13620 Exhaust. [Statutory Authority: RCW 49.17.010, .040, .050, and .060. 19-01-094 (Order 16-24), § 296-62-13620, filed 12/18/2018, effective 01/19/2019. Statutory Authority: RCW 49.17.010, 49.17.040, 49.17.050, 49.17.060. WSR 07-23-072, § 296-62-13620, filed 11/19/07, effective 1/2/08.]

WAC 296-62-13625 Make-up air quality. [Statutory Authority: RCW 49.17.010, .040, .050, and .060. 19-01-094 (Order 16-24), § 296-62-13625, filed 12/18/2018, effective 01/19/2019. Statutory Authority: RCW 49.17.010, 49.17.040, 49.17.050, 49.17.060. WSR 07-23-072, § 296-62-13625, filed 11/19/07, effective 1/2/08.]

WAC 296-62-13630 Design and operation. [Statutory Authority: RCW 49.17.010, .040, .050, and .060. 19-01-094 (Order 16-24), § 296-62-13625, filed 12/18/2018, effective 01/19/2019. Statutory Authority: RCW 49.17.010, 49.17.040, 49.17.050, 49.17.060. WSR 07-23-072, § 296-62-13630, filed 11/19/07, effective 1/2/08.]

WAC 296-62-13635 Compatibility of systems. [Statutory Authority: RCW 49.17.010, .040, .050, and .060. 19-01-094 (Order 16-24), § 296-62-13635, filed 12/18/2018, effective 01/19/2019. Statutory Authority: RCW 49.17.010, 49.17.040, 49.17.050, 49.17.060. WSR 07-23-072, § 296-62-13635, filed 11/19/07, effective 1/2/08

WAC 296-62-14533 Cotton dust. [Statutory Authority: RCW 49.17.010, .040, .050, and .060. 19-01-094 (Order 16-24), § 296-62-14533, filed 12/18/2018, effective 01/19/2019. Statutory Authority: RCW 49.17.010, .040, .050, and .060. 14-07-086 (Order 13-08), § 296-62-14533, filed 03/18/14, effective 05/01/14. Statutory Authority: RCW 49.17.010, .040, .050, and .060. 12-24-071 (Order 12-20), § 296-62-14533, filed 12/04/12, effective 01/04/13. Statutory Authority: Statutory Authority: RCW 49.17.010, .040, .050, and .060. 09-15-145 (Order 09-04), § 296-62-14533, filed 07/21/09, effective 09/01/09. Statutory Authority: RCW 49.17.010, .040, .050, and .060. 07-05-072 (Order 06-39), § 296-62-14533, filed 02/20/07, effective 04/01/07. Statutory Authority: RCW 49.17.010, .020, .040, .050, and .060. 07-03-163 (Order 06-30), § 296-62-14533, filed 01/24/07, effective 04/01/07. Statutory Authority: RCW 49.17.010, .040, .050, and .060. 05-03-093 (Order 04-41), § 296-62-14533, filed 01/18/05, effective 03/01/05. Statutory Authority: RCW 49.17.010, .040, .050, and .060. 04-10-026 (Order 03-04) § 296-62-14533, filed 04/27/04, effective 08/01/04. Statutory Authority: RCW 49.17.010, .040, .050. 01-19-065 (Order 01-15), § 296-62-14533, filed 09/18/01, effective 11/01/01. Statutory Authority: RCW 49.17.010, .040, .050. 99-10 (Order 98-10) 21 296-62-14533, filed 05/04/99, effective 09/01/99.] Statutory Authority: Chapter 49.17 RCW. 87-24-051 (Order 87-24), 296-62-14533, filed 11/30/87. Statutory Authority: RCW 49.17.040 and 49.17.050. 86-16-009 (Order 86-28), 296-62-14533, filed 7/25/86; 82-03-023 (Order 82-1), 296-62-14533, filed 1/15/82. Statutory Authority: 49.17.040, 49.17.050, and 49.17.240. 81-16-015 (Order 81-20), 296-62-14533, filed 7/27/81. Statutory Authority: RCW 49.17.040, 49.17.050, 49.17.240, chapters 42.30 and 43.22 RCW. 80-17-014 (Order 80-20), 296-62-14533, filed 11/13/80.]

WAC 296-62-14535 Appendix A--Air sampling and analytical procedures for determining concentrations of cotton dust. [Statutory Authority: RCW 49.17.010, .040, .050, and .060. 19-01-094 (Order 16-24), § 296-62-14535, filed 12/18/2018, effective 01/19/2019. Statutory Authority: RCW 49.17.040, 49.17.050, 49.17.240, chapters 42.30 and 43.22 RCW. 80-17-014 (Order 80-20), 296-62-14535, filed 11/13/80.]

WAC 296-62-14537 Appendix B-I through B-III--Respiratory questionnaire. [Statutory Authority: Chapter 49.17 RCW. 87-24-051 (Order 87-24), 296-62-14537, filed 11/30/87.]

WAC 296-62-14539 Appendix C--Spirometry prediction tables for normal males and females. [Statutory Authority: Chapter 49.17 RCW. 87-24-051 (Order 87-24), 296-62-14539, filed 11/30/87.]

WAC 296-62-14541 Appendix D--Pulmonary function standards for cotton dust standard. [Statutory Authority: Chapter 49.17 RCW. 88-14-108 (Order 88-11), 296-62-14541, filed 7/6/88; 87-24-051 (Order 87-24), 296-62-14541, filed 11/30/87.]

WAC 296-62-14543 Appendix E--Vertical elutriator equivalency protocol. [Statutory Authority: RCW 49.17.040 and 49.17.050. 86-16-009 (Order 86-28), 296-62-14543, filed 7/25/86.]

WAC 296-62-200 Coke oven emissions. Scope and application. [Order 77-14, 296-62-200, filed 7/25/77.]

WAC 296-62-20001 Definitions. [Statutory Authority: RCW 49.17.010, .040, .050, and .060. 19-01-094 (Order 16-24), § 296-62-20001, filed 12/18/2018, effective 01/19/2019. Order 77-14, 296-62-20001, filed 7/25/77.]

WAC 296-62-20003 Permissible exposure limit. [Statutory Authority: RCW 49.17.010, .040, .050, and .060. 19-01-094 (Order 16-24), § 296-62-20003, filed 12/18/2018, effective 01/19/2019. Order 77-14, 296-62-20003, filed 7/25/77.]

WAC 296-62-20005 Regulated areas. [Statutory Authority: RCW 49.17.010, .040, .050, and .060. 19-01-094 (Order 16-24), § 296-62-20005, filed 12/18/2018, effective 01/19/2019. Order 77-14, 296-62-20005, filed 7/25/77.]

WAC 296-62-20007 Exposure monitoring and measurement. [Statutory Authority: RCW 49.17.010, .040, .050, and .060. 19-01-094 (Order 16-24), § 296-62-20007, filed 12/18/2018, effective 01/19/2019. Order 77-14, 296-62-20007, filed 7/25/77.]

WAC 296-62-20009 Methods of compliance. [Statutory Authority: RCW 49.17.010, .040, .050, and .060. 19-01-094 (Order 16-24), § 296-62-20009, filed 12/18/2018, effective 01/19/2019. Statutory Authority: Chapter 49.17 RCW. 88-23-054 (Order 88-25), 296-62-20009, filed 11/14/88. Statutory Authority: RCW 49.17.040 and 49.17.050. 86-16-009 (Order 86-28), 296-62-20009, filed 7/25/86; Order 77-14, 296-62-20009, filed 7/25/77.]

WAC 296-62-20011 Respiratory protection. [Statutory Authority: RCW 49.17.010, .040, .050, and .060. 09-15-145 (Order 09-04), § 296-62-20011, filed 07/21/09, effective 09/01/09. Statutory Authority: RCW 49.17.010, .040, .050, and .060. 07-05-072 (Order 06-39), § 296-62-20011, filed 02/20/07, effective 04/01/07. Statutory Authority: RCW 49.17.010, .040, .050, and .060. 05-03-093 (Order 04-41), § 296-62-20011, filed 01/18/05, effective 03/01/05. Statutory Authority: RCW 49.17.010, .040, .050. 99-10 (Order 98-10) § 296-62-20011, filed 05/04/99, effective 09/01/99.] Statutory Authority: RCW 49.17.040 and 49.17.050. 86-16-009 (Order 86-28), 296-62-20011, filed 7/25/86. Statutory Authority: 49.17.040, 49.17.050, and 49.17.240. 81-16-015 (Order 81-20), 296-62-20011, filed 7/27/81; Order 77-14, 296-62-20011, filed 7/25/77.]

WAC 296-62-20013 Protective clothing and equipment. [Statutory Authority: RCW 49.17.010, .040, .050, and .060. 19-01-094 (Order 16-24), § 296-62-20013, filed 12/18/2018, effective 01/19/2019. Statutory Authority: RCW 49.17.010, .040, .050. 01-11-038, (Order 99-36), § 296-62-20013, filed 05/09/01, effective 09/01/01. Order 77-14, 296-62-20013, filed 7/25/77.]

WAC 296-62-20015 Hygiene facilities and practices. [Statutory Authority: RCW 49.17.010, .040, .050, and .060. 19-01-094 (Order 16-24), § 296-62-20015, filed 12/18/2018, effective 01/19/2019. Statutory Authority: RCW 49.17.010, .040, .050, and .060. 03-18-090 (Order 03-15), § 296-62-20015, filed 09/02/03, effective 11/01/03. Statutory Authority: RCW 49.17.010, .040, .050. 01-11-038, (Order 99-36), § 296-62-20015, filed 05/09/01, effective 09/01/01. Order 77-14, 296-62-20015, filed 7/25/77.]

WAC 296-62-20017 Medical surveillance. [Statutory Authority: RCW 49.17.010, .040, .050, and .060. 19-01-094 (Order 16-24), § 296-62-20017, filed 12/18/2018, effective 01/19/2019. Statutory Authority: RCW 49.17.010, .040, .050. 99-17-094 (Order 99-01), § 296-62-20017, filed 08/17/99, effective 12/01/99. Statutory Authority: RCW 49.17.010, [49.17].040 and [49.17].050. 98-02-030, 296-62-20017, filed 12/31/97, effective 1/31/98; Order 77-14, 296-62-20017, filed 7/25/77.]

WAC 296-62-20019 Employee information and training. [Statutory Authority: RCW 49.17.010, .040, .050, and .060. 19-01-094 (Order 16-24), § 296-62-20019, filed 12/18/2018, effective 01/19/2019. Statutory Authority: RCW 49.17.010, .040, .050, and .060. 05-03-093 (Order 04-41), § 296-62-20019, filed 01/18/05, effective 03/01/05. Statutory Authority: RCW 49.17.010, .040, .050. 99-10 (Order 98-10) § 296-62-20019, filed 05/04/99, effective 09/01/99.] Statutory Authority: Order 77-14, 296-62-20019, filed 7/25/77.]

WAC 296-62-20021 Communication of hazards. [Statutory Authority: RCW 49.17.010, .040, .050, and .060. 19-01-094 (Order 16-24), § 296-62-20021, filed 12/18/2018, effective 01/19/2019. Statutory Authority: RCW 49.17.010, .040, .050, and .060. 14-07-086 (Order 13-08), § 296-62-20021, filed 03/18/14, effective 05/01/14. Statutory Authority: Order 77-14, 296-62-20021, filed 7/25/77.]

WAC 296-62-20023 Recordkeeping. [Statutory Authority: RCW 49.17.010, .040, .050, and .060. 19-01-094 (Order 16-24), § 296-62-20023, filed 12/18/2018, effective 01/19/2019. Statutory Authority: RCW 49.17.010, .040, .050, and .060. 12-24-071 (Order 12-20), § 296-62-20023, filed 12/04/12, effective 01/04/13. Statutory Authority: Statutory Authority: RCW 49.17.010, .040, .050, and .060. 04-10-026 (Order 03-04) § 296-62-20023, filed 04/27/04, effective 08/01/04. Statutory Authority: RCW 49.17.040, 49.17.050 and 49.17.240. 81-18-029 (Order 81-21), 296-62-20023, filed 8/27/81; Order 77-14, 296-62-20023, filed 7/25/77.]

WAC 296-62-20025 Observation of monitoring. [Statutory Authority: RCW 49.17.010, .040, .050, and .060. 19-01-094 (Order 16-24), § 296-62-20025, filed 12/18/2018, effective 01/19/2019. Order 77-14, 296-62-20025, filed 7/25/77.]

WAC 296-62-20027 Appendix A--Coke oven emissions substance information sheet. [Statutory Authority: RCW 49.17.010, .040, .050. 99-17-094 (Order 99-01), § 296-62-20027, filed 08/17/99, effective 12/01/99. Statutory Authority: RCW 49.17.010, .040, .050. 99-10 (Order 98-10) § 296-62-20027, filed 05/04/99, effective 09/01/99.] Statutory Authority: RCW 49.17.010, [49.17].040 and [49.17].050. 98-02-030, 296-62-20027, filed 12/31/97, effective 1/31/98; Order 77-14, Appendix A (codified as WAC 296-62-20027), filed 7/25/77.]

WAC 296-62-20029 Appendix B--Industrial hygiene and medical surveillance guidelines. [Statutory Authority: RCW 49.17.010, .040, .050. 99-17-094 (Order 99-01), § 296-62-20029, filed 08/17/99, effective 12/01/99. Statutory Authority: RCW 49.17.010, [49.17].040 and [49.17].050. 98-02-030, 296-62-20029, filed 12/31/97, effective 1/31/98; Order 77-14, Appendix B (codified as WAC 296-62-20029), filed 7/25/77.]

WAC 296-62-500 Hazardous drugs. [Statutory Authority: RCW 49.17.010, RCW 49.17.040, RCW 49.17.050, RCW 49.17.060,and Chapter 39, Laws of 2011. 12-02-053 (Order 11-10), § 296-62-500, filed 01/03/12, effective 01/01/14.]

WAC 296-62-50005 Scope. [Statutory Authority: RCW 49.17.010, .040, .050. 99-17-094 (Order 99-01), § 296-62-50005, filed 08/17/99, effective 12/01/99. Statutory Authority: RCW 49.17.010, RCW 49.17.040, RCW 49.17.050, RCW 49.17.060,and Chapter 39, Laws of 2011. 12-02-053 (Order 11-10), § 296-62-50005, filed 01/03/12, effective 01/01/14.]

WAC 296-62-50010 Definitions. [Statutory Authority: RCW 49.17.010, .040, .050. 99-17-094 (Order 99-01), § 296-62-50010, filed 08/17/99, effective 12/01/99. Statutory Authority: RCW 49.17.010, .040, .050, and .060. 16-10-083 (Order 14-07), § 296-62-50010, filed 05/03/16, effective 06/03/16. Statutory Authority: RCW 49.17.010, RCW 49.17.040, RCW 49.17.050, RCW **49.17.060,and Chapter 39, Laws of 2011. 12-02-053 (Order 11-10), § 296-62-50010, filed 01/03/12, effective 01/01/14.]**

WAC 296-62-50015 Hazardous drugs control program. [Statutory Authority: RCW 49.17.010, RCW 49.17.040, RCW 49.17.050, RCW 49.17.060, and Chapter 39, Laws of 2011. 12-02-053 (Order 11-10), § 296-62-50015, filed 01/03/12, effective 01/01/14.]

WAC 296-62-50020 Hazard assessment. [Statutory Authority: RCW 49.17.010, RCW 49.17.040, RCW 49.17.050, RCW 49.17.060,and Chapter 39, Laws of 2011. 12-02-053 (Order 11-10), § 296-62-50020, filed 01/03/12, effective 01/01/14.]

WAC 296-62-50025 Engineering controls. [Statutory Authority: RCW 49.17.010, .040, .050, and .060. 16-10-083 (Order 14-07), § 296-62-50025, filed 05/03/16, effective 06/03/16. Statutory Authority: RCW 49.17.010, RCW 49.17.040, RCW 49.17.050, RCW 49.17.060, and Chapter 39, Laws of 2011. 12-02-053 (Order 11-10), § 296-62-50025, filed 01/03/12, effective 01/01/14.]

WAC 296-62-50030 Personal protective equipment (PPE). [Statutory Authority: RCW 49.17.010, .040, .050, and .060. 16-10-083 (Order 14-07), § 296-62-50030, filed 05/03/16, effective 06/03/16. Statutory Authority: RCW 49.17.010, RCW 49.17.040, RCW 49.17.050, RCW 49.17.060, and Chapter 39, Laws of 2011. 12-02-053 (Order 11-10), § 296-62-50030, filed 01/03/12, effective 01/01/14.]

WAC 296-62-50035 Safe handling practices. [Statutory Authority: RCW 49.17.010, .040, .050, and .060. 16-10-083 (Order 14-07), § 296-62-50035, filed 05/03/16, effective 06/03/16. Statutory Authority: RCW 49.17.010, .040, .050, and .060. 14-07-086 (Order 13-08), § 296-62-50035, filed 03/18/14, effective 05/01/14. Statutory Authority: RCW 49.17.010, RCW 49.17.040, RCW 49.17.050, RCW 49.17.060,and Chapter 39, Laws of 2011. 12-02-053 (Order 11-10), § 296-62-50035, filed 01/03/12, effective 01/01/14.]

WAC 296-62-50040 Cleaning and housekeeping. [Statutory Authority: RCW 49.17.010, RCW 49.17.040, RCW 49.17.050, RCW 49.17.060,and Chapter 39, Laws of 2011. 12-02-053 (Order 11-10), § 296-62-50040, filed 01/03/12, effective 01/01/14.]

WAC 296-62-50045 Spill control. [Statutory Authority: RCW 49.17.010, .040, .050, and .060. 16-10-083 (Order 14-07), § 296-62-50045, filed 05/03/16, effective 06/03/16. Statutory Authority: RCW 49.17.010, RCW 49.17.040, RCW 49.17.050, RCW 49.17.060, and Chapter 39, Laws of 2011. 12-02-053 (Order 11-10), § 296-62-50045, filed 01/03/12, effective 01/01/14.]

WAC 296-62-50050 Training. [Statutory Authority: RCW 49.17.010, .040, .050, and .060. 16-10-083 (Order 14-07), § 296-62-50050, filed 05/03/16, effective 06/03/16. Statutory Authority: RCW 49.17.010, RCW 49.17.040, RCW 49.17.050, RCW 49.17.060, and Chapter 39, Laws of 2011. 12-02-053 (Order 11-10), § 296-62-50050, filed 01/03/12, effective 07/01/14.]

WAC 296-62-50055 Implementation plan. [Statutory Authority: RCW 49.17.010, .040, .050. 99-17-094 (Order 99-01), § 296-62-500559, filed 08/17/99, effective 12/01/99. Statutory Authority: RCW 49.17.010, RCW 49.17.040, RCW 49.17.050, RCW 49.17.060,and Chapter 39, Laws of 2011. 12-02-053 (Order 11-10), § 296-62-50055, filed 01/03/12, effective 01/01/14.]