Chapter 296-800 WAC
Safety Standards for Core Rules
(Form Number F414-059-000)

This book contains rules for Safety Standards for core rules, as adopted under the Washington Industrial Safety and Health Act of 1973 (Chapter 49.17 RCW).

The rules in this book are effective October 2020. A brief promulgation history, set within brackets at the end of each section, gives statutory authority, administrative order of promulgation, and date of adoption of filing.

TO RECEIVE E-MAIL UPDATES:

- Sign up at https://public.govdelivery.com/accounts/WADLI/subscriber/new?topic_id=WADLI_19

TO PRINT YOUR OWN PAPER COPY OR TO VIEW THE RULE ONLINE:

- Go to https://www.lni.wa.gov/safety-health/safety-rules/rules-by-chapter/?chapter=800/

DOSH CONTACT INFORMATION:

- **Physical address:**
  7273 Linderson Way
  Tumwater, WA 98501-5414
  (Located off I-5 Exit 101 south of Tumwater.)
- **Mailing address:**
  DOSH Standards and Information
  PO Box 44810
  Olympia, WA 98504-4810
- Telephone: 1-800-423-7233
- For all L&I Contact information, visit https://www.lni.wa.gov/agency/contact/

Also available on the L&I Safety & Health website:

- DOSH Core Rules
- Other General Workplace Safety & Health Rules
- Industry and Task-Specific Rules
- Proposed Rules and Hearings
- Newly Adopted Rules and New Rule Information
- DOSH Directives (DD's)
- See http://www.lni.wa.gov/Safety-Health/

Chapter 296-800 WAC
Safety and Health Core Rules

WAC.....Page

WAC 296-800-099 Definitions. 1

WAC 296-800-100 Introduction. The safety and health core rules: 18

WAC 296-800-110 Employer responsibilities: Safe workplace 21

WAC 296-800-11005 Provide a workplace free from recognized hazards. 22

WAC 296-800-11010 Provide and use means to make your workplace safe..... 22

WAC 296-800-11015 Prohibit employees from entering, or being in, any workplace that is not safe..... 22

WAC 296-800-11020 Construct your workplace so it is safe..... 22

WAC 296-800-11025 Prohibit alcohol and narcotics from your workplace. 22

WAC 296-800-11030 Prohibit employees from using tools and equipment that are not safe. 23

WAC 296-800-11035 Establish, supervise, and enforce rules that lead to a safe and healthy work environment that are effective in practice..... 23

WAC 296-800-11040 Control Chemical Agents. 23

WAC 296-800-11045 Protect employees from biological agents. 23

WAC 296-800-120 Rule. 25

WAC 296-800-12005 Employee responsibilities. 25

WAC 296-800-130 Safety committees/safety meetings. 27

WAC 296-800-13020 Establish and conduct safety committees. 27

WAC 296-800-13025 Follow these rules to conduct safety meetings. 29

WAC 296-800-140 Accident prevention program..... 30

WAC 296-800-14005 Develop a formal, written accident prevention program. 30

WAC 296-800-14020 Develop, supervise, implement, and enforce safety and health training programs that are effective in practice. 31

WAC 296-800-14025 Make sure your accident prevention program is effective in practice. 31

WAC 296-800-14035 2019 Novel coronavirus prohibited business activities and compliance with conditions for operations. 31

WAC 296-800-150 First Aid. 32

WAC 296-800-15005 Make sure that first-aid trained personnel are available to provide quick and effective first aid. 33

WAC 296-800-15020 Make sure appropriate first-aid supplies are readily available. 33

WAC 296-800-15030 Make sure emergency washing facilities are functional and readily accessible. 33

WAC 296-800-15035 Inspect and activate your emergency washing facilities. 35

WAC 296-800-15040 Make sure supplemental flushing equipment provides sufficient water. 36

WAC 206-800-160 Personal protective equipment (PPE)... 37

WAC 296-800-16002 Compliance duties owed to each employee. 38

WAC 296-800-16005 Do a hazard assessment for PPE. 38

WAC 296-800-16010 Document your hazard assessment for PPE. 38

WAC 296-800-16015 Select appropriate PPE for your employees. 39

WAC 296-800-16020 Provide PPE to your employees. 40

WAC 296-800-16025 Train your employees to use PPE. 43

WAC 296-800-16030 Retrain employees to use PPE, if necessary. 44

WAC 296-800-16035 Document PPE training. 44

WAC 296-800-16040 Require your employees to use necessary PPE on the job. 44

WAC 296-800-16045 Keep PPE in safe and good condition. 44

WAC 296-800-16050 Make sure your employees use appropriate eye and face protection. 44

WAC 296-800-16060 Make sure your employees use appropriate foot protection. 46

WAC 296-800-16065 Make sure your employees use appropriate hand protection. 47

WAC 296-800-16070 Make sure your employees are protected from drowning. .. 47

WAC 296-800-180 Safety data sheets (SDSs) as exposure records. 49

WAC 296-800-18005 Preserve exposure records for at least thirty years. 50

WAC 296-800-18010 Inform current employees of exposure records. 50

WAC 296-800-18015 Provide access to exposure records. 51

WAC 296-800-18020 Transfer records when ceasing to do business. 52

WAC 296-800-190 Safety bulletin board. 53

WAC 296-800-19005 Provide a safety bulletin board in your workplace. 53

WAC 296-800-200 Job safety and health law poster. 54

WAC 296-800-20005 Post and keep a job safety and health law poster in your workplace. 54

WAC 296-800-210 Lighting. 55

WAC 296-800-21005 Provide and maintain adequate lighting. 55

WAC 296-800-220 Housekeeping, drainage, and storage. . 56

WAC 296-800-22005 Keep your workplace clean. 57

WAC 296-800-22010 Sweep and clean your workplace to minimize dust. 57

WAC 296-800-22015 Keep your workplace free of obstacles that interfere with cleaning. 57

WAC 296-800-22020 Control pests in your workplace. 57

WAC 296-800-22022 Make sure floors are maintained in a safe condition. 58

WAC 296-800-22025 Keep your workroom floors dry, when practical. 58

WAC 296-800-22030 Provide proper drainage. 58

WAC 296-800-22035 Store things safely. 58

WAC 296-800-22040 Control vegetation in your storage areas. 59

WAC 296-800-230 Drinking water, bathrooms, washing facilities and waste disposal..... 60

WAC 296-800-23005 Provide safe drinking (potable) water in your workplace..... 61

WAC 296-800-23010 Clearly mark the water outlets that are not fit for drinking (nonpotable)..... 62

WAC 296-800-23015 Make sure that systems delivering not-fit-for-drinking (nonpotable) water prevent backflow into drinking water systems..... 63

WAC 296-800-23020 Provide bathrooms for your employees. 63

WAC 296-800-23025 Provide convenient and clean washing facilities. 64

WAC 296-800-23040 Make sure eating areas are safe and healthy. 65

WAC 296-800-23045 Follow these requirements if you provide food service to your employees..... 65

WAC 296-800-23050 Dispose of garbage and waste safely. 65

WAC 296-800-23055 Remove garbage and waste in a way that does not create a health hazard. 66

WAC 296-800-23060 Provide a separate lunchroom if employees are exposed to toxic substances if they are allowed to eat and drink on the job site. 66

WAC 296-800-23065 Provide showers when required for employees working with chemicals..... 66

WAC 296-800-23070 Provide change rooms when required. 67

WAC 296-800-23075 Make sure any work clothes you provide are dry..... 67

WAC 296-800-240 Environmental tobacco smoke in the office. 68

WAC 296-800-24005 Prohibit tobacco smoke in your office work environment. ... 68

WAC 296-800-250 Stairs and stair railings. 69

WAC 296-800-25005 Provide fixed stairs where required..... 69

WAC 296-800-25010 Provide stairs that minimize hazards. 71

WAC 296-800-25015 Provide handrails and stair railings. 71

WAC 296-800-270 Workplace structural integrity. 73

WAC 296-800-27005 Do not overload floors or roofs. 73

WAC 296-800-27010 Make sure that floors are safe. 73

WAC 296-800-27015 Make sure floors can support equipment that moves or has motion. 74

WAC 296-800-27020 Post approved load limits (weight limits) for floors. 74

WAC 296-800-280 Basic electrical rules. 75

WAC 296-800-28005 Inspect all electrical equipment your employees use to make sure the equipment is safe. 77

WAC 296-800-28010 Make sure all electrical equipment is used for its approved or listed purpose. 78

WAC 296-800-28015 Make sure electrical equipment used or located in wet or damp locations is designed for such use. 78

WAC 296-800-28020 Make sure electrical equipment that is not marked is not used. 79

WAC 296-800-28022 Identify disconnecting means. 80

WAC 296-800-28025 Maintain electrical fittings, boxes, cabinets and outlets in good condition. 81

WAC 296-800-28027 Working space around electrical equipment. 81

WAC 296-800-28030 Maintain all flexible cords and cables in good condition and use safely. 83

WAC 296-800-28035 Guard electrical equipment to prevent your employees from electrical hazards. 86

WAC 296-800-28040 Make sure electrical equipment is effectively grounded. 87

WAC 296-800-28045 Make sure electrical equipment has overcurrent protection. 91

WAC 296-800-300 Portable fire extinguishers. 92

WAC 296-800-30005 Provide portable fire extinguishers in your workplace. 93

WAC 296-800-30015 Make sure that portable fire extinguishers are kept fully charged, in operable condition, and left in their designated places. 95

WAC 296-800-30020 Inspect and test all portable fire extinguishers. 95

WAC 296-800-30025 Train your employees to use portable fire extinguishers. 97

WAC 296-800-310 Exit routes and employee alarm systems..... 98

WAC 296-800-31005 Provide an adequate number of exit routes. 99

WAC 296-800-31010 Make sure that exit routes are large enough..... 100

WAC 296-800-31015 Make sure that exit routes meet their specific design and construction requirements. 100

WAC 296-800-31020 Make sure that each exit route leads outside..... 101

WAC 296-800-31025 Provide unobstructed access to exit routes. 101

WAC 296-800-31030 Exit doors must be readily opened from the inside. 101

WAC 296-800-31040 Provide outdoor exit routes that meet these requirements. 102

WAC 296-800-31045 Minimize danger to employees while they are using emergency exit routes. 102

WAC 296-800-31050 Mark exits adequately. 102

WAC 296-800-31055 Maintain the fire retardant properties of paints or other coatings..... 103

WAC 296-800-31060 Maintain emergency safeguards. 103

WAC 296-800-31065 Maintain exit routes during construction and repair..... 103

WAC 296-800-31067 Provide doors in freezer or refrigerated rooms that open from the inside..... 103

WAC 296-800-31070 Install and maintain an appropriate employee alarm system..... 104

WAC 296-800-31075 Establish procedures for sounding emergency alarms. 105

WAC 296-800-31080 Test the employee alarm system. 105

WAC 296-800-320 Accident reporting and investigating. 106

WAC 296-800-32010 Make sure equipment involved in a work-related accident is not moved. 106

WAC 296-800-32015 Assign people to assist the department of labor and industries..... 107

WAC 296-800-32020 Conduct a preliminary investigation for all serious injuries..... 107

WAC 296-800-32025 Document the preliminary investigation findings. 108

WAC 296-800-330 Releasing accident investigation reports. 109

WAC 296-800-340 Protecting the identity of the source of confidential information. 110

WAC 296-800-360 Using standards from national organizations and federal agencies. 111

WAC 296-800-36005 Comply with standards of national organizations or federal agencies when referenced in WISHA rules. 111

WAC 296-800-099 Definitions.

Abatement action plans Refers to your written plans for correcting a WISHA violation.

Abatement date. The date on the citation when you must comply with specific safety and health standards listed on the citation and notice of assessment or the corrective notice of redetermination.

Acceptable. As used in Electrical, WAC 296-800-280 means an installation or equipment is acceptable to the director of labor and industries, and approved:

- If it is accepted, or certified, or listed, or labeled, or otherwise determined to be safe by a nationally recognized testing laboratory; or
- With respect to an installation or equipment of a kind which no nationally recognized testing laboratory accepts, certifies, lists, labels, or determines to be safe, if it is inspected or tested by another federal agency, or by a state, municipal, or other local authority responsible for enforcing occupational safety provisions of the National Electrical Code, and found in compliance with the provisions of the National Electrical Code as applied in this section; or
- With respect to custom-made equipment or related installations which are designed, fabricated for, and intended for use by a particular customer, if it is determined to be safe for its intended use by its manufacturer on the basis of test data which the employer keeps and makes available for inspection to the director and his/her authorized representatives. Refer to federal regulation 29 C.F.R. 1910.7 for definition of nationally recognized testing laboratory.

Accepted. As used in Electrical, WAC 296-800-280 means an installation is accepted if it has been inspected and found by a nationally recognized testing laboratory to conform to specified plans or to procedures of applicable codes.

Access. As used in safety data sheets (SDSs) as exposure records, WAC 296-901-14014 means the right and opportunity to examine and copy exposure records.

Affected employees. As used in WISHA appeals, penalties and other procedural rules, WAC 296-800-350 means employees exposed to hazards identified as violations in a citation.

Analysis using exposure or medical records.

- An analysis using exposure records or medical records can be any collection of data or a statistical study. It can be based on either:
  - Partial or complete information from individual employee exposure or medical records; or
  - Information collected from health insurance claim records.
- The analysis is not final until it has been:
  - Reported to the employer; or
  - Completed by the person responsible for the analysis.

ANSI. This is an acronym for the American National Standards Institute.

Approved.

- Approved by the director of the department of labor and industries or their authorized representative, or by an organization that is specifically named in a rule, such as Underwriters' Laboratories (UL), Mine Safety and Health Administration (MSHA), or the National Institute for Occupational Safety and Health (NIOSH).
- As used in Electrical, WAC 296-800-280 means acceptable to the authority enforcing this section. The authority enforcing this section is the director of labor and industries. The definition of acceptable indicates what is acceptable to the director and therefore approved.

Assistant director. The assistant director for the WISHA services division at the department of labor and industries or his/her designated representative.

ASTM. This is an acronym for American Society for Testing and Materials.

Attachment plug or plug. As used in the basic electrical rules, WAC 296-800-280 means the attachment at the end of a flexible cord or cable that is part of a piece of electrical equipment. When it is inserted into an outlet or receptacle, it connects the conductors supplying electrical power from the outlet to the flexible cable.

Bare conductor. A conductor that does not have any covering or insulation.

Bathroom. A room maintained within or on the premises of any place of employment, containing toilets that flush for use by employees.

Biological agents. Organisms or their by-products.

Board. As used in WISHA appeals, penalties and other procedural rules, WAC 296-800-350 means the board of industrial insurance appeals.

Ceiling. An exposure limit that must not be exceeded during any part of the employee's workday. The ceiling must be determined over the shortest time period feasible and should not exceed fifteen minutes.

Certification. As used in WISHA appeals, penalties and other procedural rules, WAC 296-800-350 means refers to an employer's written statement describing when and how a citation violation was corrected.

C.**F**.**R**. This is an acronym for Code of Federal Regulations.

Chemical. Any element, chemical compound, or mixture of elements and/or compounds.

Chemical agents (airborne or contact). A chemical agent is any of the following:

- Airborne chemical agent which is any of the following:
  - Dust, solid particles suspended in air, that are created by actions such as:
    - Handling.
    - Drilling.
    - Crushing.
    - Grinding.
    - Rapid impact.
    - Detonation.
    - Decrepitation of organic or inorganic materials such as rock, ore, metal, coal, wood, and grain.

  - Fume, solid particles suspended in air, that are created by condensation from the gaseous state.
  - Gas, a normally formless fluid, such as air, which can be changed to the liquid or solid state by the effect of increased pressure or decreased temperature or both.
  - Mist, liquid droplets suspended in air. Mist is created by:

- Condensation from the gaseous to the liquid state; or
- Converting a liquid into a dispersed state with actions such as splashing, foaming, spraying or atomizing.

  - Vapor. The gaseous form of a substance that is normally in the solid or liquid state.

- Contact chemical agent which is any of the following:

  - Corrosive. A substance that, upon contact, causes destruction of living tissue by chemical action, including acids with a pH of 2.5 or below or caustics with a pH of 11.0 or above.
  - Irritant. A substance that will induce a local inflammatory reaction upon immediate, prolonged, or repeated contact with normal living tissue.
  - Toxicant. A substance that has the inherent capacity to produce personal injury or illness to individuals by absorption through any body surface.

Chemical manufacturer. An employer with a workplace where one or more chemicals are produced for use or distribution.

Chemical name. The scientific designation of a chemical in accordance with one of the following:

- The nomenclature system developed by the International Union of Pure and Applied Chemistry (IUPAC).
- The Chemical Abstracts Service (CAS) rules of nomenclature.
- A name which will clearly identify the chemical for the purpose of conducting a hazard evaluation.

Circuit breaker.

- Is a device used to manually open or close a circuit. This device will also open the circuit automatically and without damage to the breaker when a predetermined overcurrent is applied. (600 volts nominal or less.)
- Is a switching device capable of making, carrying, and breaking currents under normal circuit conditions, and also making, carrying for a specified time, and breaking currents under specified abnormal circuit conditions, such as those of short circuit. (Over 600 volts nominal.)

Citation. Refers to the citation and notice issued to an employer for any violation of WISHA safety and health rules. A citation and notice may be referred to as a citation and notice of assessment but is more commonly referred to as a citation.

Commercial account. As used in Hazard communication, WAC 296-901-140 means an arrangement in which a retail distributor sells hazardous chemical(s) to an employer, generally in large quantities over time, and/or at costs that are below the regular retail price.

Common name. As used in Hazard communication, WAC 296-901-140 means any designation or identification such as:

- Code name.
- Code number.
- Trade name.
- Brand name.
- Generic name used to identify a chemical other than by its chemical name.

Compressed gas. A gas or mixture of gases that, when in a container, has an absolute pressure exceeding:

- 40 psi at 70°F (21.1°C); or
- 104 psi at 130°F (54.4°C) regardless of the pressure at 70°F (21.1°C).

Compressed gas can also mean a liquid with a vapor pressure that exceeds 40 psi at 100°F (37.8°C).

Conductor. Wire that transfers electric power.

Container. As used in Hazard communication, WAC 296-901-140 means any container, except for pipes or piping systems, that contains a hazardous chemical. It can be any of the following:

- Bag.
- Barrel.
- Bottle.
- Box.
- Can.
- Cylinder.
- Drum.
- Reaction vessel.
- Storage tank.

Correction date. The date by which a violation must be corrected. Final orders or extensions that give additional time to make corrections establish correction dates. A correction date established by an order of the board of industrial insurance appeals remains in effect during any court appeal unless the court suspends the date.

Corrective notice. Refers to a notice changing a citation and is issued by the department after a citation has been appealed.

Corrosive. A substance that, upon contact, causes destruction of living tissue by chemical action, including acids with a pH of 2.5 or below or caustics with a pH of 11.0 or above.

Covered conductor. A conductor that is covered by something else besides electrical insulation.

Damp location. As used in basic electrical rules, WAC 296-800-280 means partially protected areas that are exposed to moderate moisture. Outdoor examples include roofed open porches and marquees. Interior examples include basements and barns.

Department. Those portions of the department of labor and industries responsible for enforcing the Washington Industrial Safety Act (WISHA).

Designated representative.

- Any individual or organization to which an employee gives written authorization.
- A recognized or certified collective bargaining agent without regard to written authorization.
- The legal representative of a deceased or legally incapacitated employee.

Director. The director means the director of the department of labor and industries or their designee.

Distributor. A business, other than a chemical manufacturer or importer, that supplies hazardous chemicals to other distributors or to employers.

Documentation. As used in WISHA appeals, penalties and other procedural rules, WAC 296-800-350 means material that you submit to prove that a correction is completed. Documentation includes, but is not limited to, photographs, receipts for materials and/or labor.

Dry location. As used in basic electrical rules, WAC 296-800-280 means areas not normally subjected to damp or wet conditions. Dry locations may become temporarily damp or wet, such as when constructing a building.

Dust. Solid particles suspended in air that are created by actions such as:

- Handling.
- Drilling.
- Crushing.
- Grinding.
- Rapid impact.
- Detonation.
- Decrepitation of organic or inorganic materials such as rock, ore, metal, coal, wood, and grain.

Electrical outlets. Places on an electric circuit where power is supplied to equipment through receptacles, sockets, and outlets for attachment plugs.

Emergency washing facilities. Emergency washing facilities are emergency showers, eyewashes, eye/face washes, hand-held drench hoses, or other similar units.

Employee. Based on chapter 49.17 RCW, the term employee and other terms of like meaning, unless the context of the provision containing such term indicates otherwise, means an employee of an employer who is employed in the business of his or her employer whether by way of manual labor or otherwise and every person in this state who is engaged in the employment of or who is working under an independent contract the essence of which is personal labor for an employer under this standard whether by way of manual labor or otherwise.

Employee exposure record. As used in safety data sheets (SDSs) as exposure records, WAC 296-901-14014 means a record containing any of the following kinds of information:

- Environmental (workplace) monitoring or measuring of a toxic substance or harmful physical agent, including personal, area, grab, wipe, or other form of sampling, as well as related collection and analytical methodologies, calculations, and other background data relevant to interpretation of the results obtained;

- Biological monitoring results which directly assess the absorption of a toxic substance or harmful physical agent by body systems (e.g., the level of a chemical in the blood, urine, breath, hair, fingernails, etc.) but not including results which assess the biological effect of a substance or agent or which assess an employee's use of alcohol or drugs;
- Safety data sheets indicating that the material may pose a hazard to human health; or
- In the absence of the above, a chemical inventory or any other record which reveals where and when used and the identity (e.g., chemical, common or trade name) of a toxic substance or harmful physical agent.

Employer. Based on chapter 49.17 RCW, an employer is any person, firm, corporation, partnership, business trust, legal representative, or other business entity which engages in any business, industry, profession, or activity in this state and employs one or more employees or who contracts with one or more persons, the essence of which is the personal labor of such person or persons and includes the state, counties, cities, and all municipal corporations, public corporations, political subdivisions of the state, and charitable organizations: Provided, That any persons, partnership, or business entity not having employees, and who is covered by the Industrial Insurance Act must be considered both an employer and an employee.

Exit. Provides a way of travel out of the workplace.

Exit route. A continuous and unobstructed path of exit travel from any point within a workplace to safety outside.

Explosive. A chemical that causes a sudden, almost instant release of pressure, gas, and heat when exposed to a sudden shock, pressure, or high temperature.

Exposed live parts. Electrical parts that are:

- Not suitably guarded, isolated, or insulated; and
- Capable of being accidentally touched or approached closer than a safe distance.

Exposed wiring methods. Involve working with electrical wires that are attached to surfaces or behind panels designed to allow access to the wires.

Exposure or exposed. As used in Hazard communication, WAC 296-901-140 and safety data sheets (SDSs) as exposure records, WAC 296-901-14014. An employee has been, or may have possibly been, subjected to a hazardous chemical, toxic substance or harmful physical agent while working. An employee could have been exposed to hazardous chemicals, toxic substances, or harmful physical agents in any of the following ways:

- Inhalation.
- Ingestion.
- Skin contact.
- Absorption.
- Related means.

The terms exposure and exposed only cover workplace exposure involving a toxic substance or harmful physical agent in the workplace different from typical nonoccupational situations in the way it is:

- Used.
- Handled.
- Stored.
- Generated.
- Present.

Exposure record. See definition for employee exposure record.

Extension ladder. A portable ladder with 2 or more sections and is not self-supporting. The 2 or more sections travel in guides or brackets that let you change the length. The size of a portable ladder is determined by adding together the length of each section.

Failure-to-abate. Any violation(s) resulting from not complying with an abatement date.

Final order. Any of the following (unless an employer or other party files a timely appeal):

- Citation and notice;
- Corrective notice;
- Decision and order from the board of industrial insurance appeals;
- Denial of petition for review from the board of industrial insurance appeals; or
- Decision from a Washington State superior court, court of appeals, or the state supreme court.

Final order date. The date a final order is issued.

First aid. The extent of treatment you would expect from a person trained in basic first aid, using supplies from a first-aid kit.

Tests, such as X-rays, must not be confused with treatment.

Flammable. A chemical covered by one of the following categories:

- Aerosol flammable means a flammable aerosol as defined by WAC 296-901-14024, Appendix B—Physical hazard criteria;
- Gas, flammable means:
  - A gas that, at temperature and pressure of the surrounding area, forms a flammable mixture with air at a concentration of 13% by volume or less; or
  - A gas that, at temperature and pressure of the surrounding area, forms a range of flammable mixtures with air wider than 12% by volume, regardless of the lower limit.
- Liquid, flammable means any liquid having a flashpoint at or below 199.4°F (93°C). Flammable liquids are divided into four categories as follows:
  - Category 1 must include liquids having flashpoints below 73.4°F (23°C) and having a boiling point at or below 95°F (35°C).
  - Category 2 must include liquids having flashpoints below 73.4°F (23°C) and having a boiling point above 95°F (35°C).
  - Category 3 must include liquids having flashpoints at or above 73.4°F (23°C) and at or below 140°F (60°C). When a Category 3 liquid with a flashpoint at or above 100°F (37.8°C) is heated for use to within 30°F (16.7°C) of its flashpoint, it must be handled in accordance with the requirements for a Category 3 liquid with a flashpoint below 100°F (37.8°C).
  - Category 4 must include liquids having flashpoints above 140°F (60°C) and at or below 199.4°F (93°C). When a Category 4 flammable liquid is heated for use to within 30°F (16.7°C) of its flashpoint, it must be handled in accordance with the requirements for a Category 3 liquid with a flashpoint at or above 100°F (37.8°C).
  - When liquid with a flashpoint greater than 199.4°F (93°C) is heated for use to within 30°F (16.7°C) of its flashpoint, it must be handled in accordance with the requirements for a Category 4 flammable liquid.

- Solid, flammable means a solid, other than a blasting agent or explosive as defined in 29 C.F.R. 1910.109(a), that is likely to cause fire through friction, moisture absorption, spontaneous chemical change, or retained heat from manufacturing or processing, or which can be ignited readily. Solid, inflammable also means that when the substance is ignited, it burns so powerfully and persistently that it creates a serious hazard. A chemical must be considered to be a flammable solid if, when tested by the method described in 16 C.F.R. 1500.44, it ignites and burns with a self-sustained flame at a rate greater than one-tenth of an inch per second along its major axis.

Flashpoint.

- The minimum temperature at which a liquid gives off a vapor within a test vessel in sufficient concentration to form an ignitable mixture with air near the surface of the liquid and must be determined as follows:
  - The flashpoint of liquids having a viscosity less than 45 Saybolt Universal Second(s) at 100°F (37.8°C) and a flashpoint below 175°F (79.4°C) must be determined in accordance with the Standard Method of Test for Flash Point by the Tag Closed Tester, ASTM D-56-69, or an equivalent method as defined by WAC 296-901-14024, Appendix B—Physical hazard criteria.

Flexible cords and cables. Typically used to connect electrical equipment to an outlet or receptacle. These cords can have an attachment plug to connect to a power source or can be permanently wired into the power source. Flexible cords, extension cords, cables and electrical cords are all examples of flexible cord.

Foreseeable emergency. As used in Hazard communication, WAC 296-901-140 means any potential event that could result in an uncontrolled release of a hazardous chemical into the workplace. Examples of foreseeable emergencies include equipment failure, rupture of containers, or failure of control equipment.

Fume. Solid particles suspended in air that are created by condensation from the gaseous state.

Gas. A normally formless fluid, such as air, which can be changed to the liquid or solid state by the effect of increased pressure or decreased temperature or both.

Ground. As used in Electrical, WAC 296-800-280, a connection between an electrical circuit or equipment and the earth or other conducting body besides the earth. This connection can be intentional or accidental.

Grounded. A connection has been made between an electrical circuit or equipment and the earth or another conducting body besides the earth.

Grounded conductor. A system or circuit conductor that is intentionally grounded.

Ground-fault circuit-interrupter. A device whose function is to interrupt the electric circuit to the load when a fault current to ground exceeds some predetermined value that is less than that required to operate the overcurrent protective device of the supply circuit.

Grounding conductor. Is used to connect equipment or the grounded circuit of a wiring system to a grounding electrode or electrodes.

Grounding conductor, equipment. A conductor used to connect noncurrent-carrying metal parts of equipment, raceways, and other enclosures to the system grounded conductor and/or the grounding electrode conductor at the service equipment or at the source of a separately derived system.

Guarded. Covered, shielded, fenced, enclosed, or otherwise protected by means of suitable covers, casings, barriers, rails, screens, mats, or platforms to remove the likelihood of being accidentally touched or approached closer than a safe distance.

Hand-held drench hoses. Hand-held drench hoses are single-headed emergency washing devices connected to a flexible hose that can be used to irrigate and flush the face or other body parts.

Handrail. A rail used to provide employees with a handhold for support.

Harmful physical agent. Any physical stress such as noise, vibration, repetitive motion, heat, cold, ionizing and nonionizing radiation, and hypo- or hyperbaric pressure which:

- Is listed in the latest edition of the National Institute for Occupational Safety and Health (NIOSH) *Registry of Toxic Effects of Chemical Substances*(RTECS); or
- Has shown positive evidence of an acute or chronic health hazard in testing conducted by, or known to, the employer; or
- Is the subject of a safety data sheet kept by or known to the employer showing that the material may pose a hazard to human health.

Hazard. Any condition, potential or inherent, which can cause injury, death, or occupational disease.

Hazard warning. As used in Hazard communication, WAC 296-901-140 can be a combination of words, pictures, symbols, or combination appearing on a label or other appropriate form of warning which shows the specific physical and health hazard(s), including target organ effects, of the chemical(s) in the container(s).

> **Note**: See definition for physical hazard and health hazard to determine which hazards must be covered.

Hazardous chemical. Any chemical that is a physical or health hazard.

Health hazard. A chemical, mixture, biological agent, or physical agent that may cause health effects in short- or long-term exposed employees. Based on statistically significant evidence from at least one study conducted using established scientific principles. Health hazards include:

- Carcinogens.
- Toxic or highly toxic agents.
- Reproductive toxins.
- Irritants.
- Corrosives.
- Sensitizers.
- Hepatotoxins (liver toxins).
- Nephrotoxins (kidney toxins).
- Neurotoxins (nervous system toxins).
- Substances that act on the hematopoietic system (blood or blood-forming system).
- Substances that can damage the lungs, skin, eyes, or mucous membranes.
- Hot or cold conditions.

Hole. A gap or void two inches or more in its least dimension, in a floor, roof, or other surface.

Identity. As used in Hazard communication, WAC 296-901-140 means any chemical or common name listed on the safety data sheet (SDS) for the specific chemical. Each identity used must allow cross-references among the:

- Required list of hazardous chemicals.
- Chemical label.
- MSDSs.

Imminent danger violation. Any violation(s) resulting from conditions or practices in any place of employment, which are such that a danger exists which could reasonably be expected to cause death or serious physical harm, immediately or before such danger can be eliminated through the enforcement procedures otherwise provided by the Washington Industrial Safety and Health Act.

Importer. The first business within the Customs Territory of the USA that:

- Receives hazardous chemicals produced in other countries; and
- Supplies them to distributors or employers within the USA.

Inpatient hospitalization. To be admitted into a hospital or equivalent facility for medical treatment.

Insulated. A conductor has been completely covered by a material that is recognized as electrical insulation and is thick enough based on:

- The amount of voltage involved; and
- The type of covering material.

Interim waiver. An order granted by the department allowing an employer to vary from WISHA requirements until the department decides to grant a permanent or temporary waiver.

Irritant. A substance that will induce a local inflammatory reaction upon immediate, prolonged, or repeated contact with normal living tissue.

Ladder. Consists of 2 side rails joined at regular intervals by crosspieces called steps, rungs, or cleats. These steps are used to climb up or down.

Listed. Equipment is listed if it:

- Is listed in a publication by a nationally recognized laboratory (such as UL, underwriters laboratory) that inspects the production of that type of equipment; and
- States the equipment meets nationally recognized standards or has been tested and found safe to use in a specific manner.

Medical treatment. Treatment provided by a physician or by registered professional personnel under the standing orders of a physician. Medical treatment does not include first-aid treatment even if provided by a physician or registered professional personnel.

Mist. Liquid droplets suspended in air. Mist is created by:

- Condensation from the gaseous to the liquid state; or
- Converting a liquid into a dispersed state with actions such as splashing, foaming, spraying or atomizing.

Mixture. As used in Hazard communication, WAC 296-901-140, any combination of 2 or more chemicals (if that combination did not result from a chemical reaction).

Movable equipment. As used in WAC 296-800-35052, a hand-held or nonhand-held machine or device;

- That is powered or nonpowered; and
- Can be moved within or between worksites.

Must. Mandatory.

NEMA. These initials stand for National Electrical Manufacturing Association.

NFPA. This is an acronym for National Fire Protection Association.

Nose. The portion of the stair tread that projects over the face of the riser below it.

Occupational Safety and Health Administration (OSHA). Created in 1970 when the U.S. Congress passed the Occupational Safety and Health Act, the Occupational Safety and Health Administration (OSHA) provides safety on the job for workers. OSHA oversees state plans (such as WISHA in Washington) that have elected to administer the safety and health program for their state. OSHA requires WISHA rules to be at least as effective as OSHA rules.

Office work environment. An indoor or enclosed occupied space where clerical work, administration, or business is carried out.

In addition, it includes:

- Other workplace spaces controlled by the employer and used by office workers, such as cafeterias, meeting rooms, and washrooms.
- Office areas of manufacturing and production facilities, not including process areas.
- Office areas of businesses such as food and beverage establishments, agricultural operations, construction, commercial trade, services, etc.

Open riser. A stair step with an air space between treads has an open riser.

Opening. A gap or void thirty inches (76 cm) or more high and eighteen inches (48 cm) or more wide, in a wall or partition, through which employees can fall to a lower level.

Organic peroxide. This is an organic compound containing the bivalent-0-0-structure. It may be considered a structural derivative of hydrogen peroxide if one or both of the hydrogen atoms has been replaced by an organic radical.

Outlet. See definition for electrical outlets.

Oxidizer. A chemical other than a blasting agent or explosive as defined in WAC 296-52-60130 or C.F.R. 1910.109(a), that starts or promotes combustion in other materials, causing fire either of itself or through the release of oxygen or other gases.

Permissible exposure limits (PELs). Permissible exposure limits (PELs) are employee exposures to toxic substances or harmful physical agents that must not be exceeded. PELs are specified in applicable WISHA rules.

Person. Based on chapter 49.17 RCW, one or more individuals, partnerships, associations, corporations, business trusts, legal representatives, or any organized group of persons.

Personal eyewash units. Personal eyewash units are portable, supplementary units that support plumbed units or self-contained units, or both, by delivering immediate flushing for less than fifteen minutes.

Personal service room. Used for activities not directly connected with a business' production or service function such as:

- First aid.
- Medical services.
- Dressing.
- Showering.
- Bathrooms.
- Washing.
- Eating.

Personnel. See the definition for employees.

Physical hazard. Means a chemical that is classified as posing one of the following hazardous effects: Explosive; flammable (gases, aerosols, liquids, or solids); oxidizer (liquid, solid or gas); self-reactive; pyrophoric (liquid or solid); self-heating; organic peroxide; corrosive to metal; gas under pressure; or in contact with water emits flammable gas. WAC 296-901-14024, Appendix B—Physical hazard criteria.

Platform. A work surface elevated above the surrounding floor or ground.

Plug. See definition for attachment plug.

Potable water. Water that is suitable for drinking by the public and meets the requirements of chapter 246-290 or 246-291 WAC.

Predictable and regular basis. Employee functions such as, but not limited to, inspection, service, repair and maintenance which are performed:

- At least once every 2 weeks; or
- Four man-hours or more during any sequential 4-week period (to calculate man-hours multiply the number of employees by the number of hours during a 4-week period).

Produce. As used in Hazard communication, WAC 296-901-140, any one of the following:

- Manufacture.
- Process.
- Formulate.
- Blend.
- Extract.
- Generate.
- Emit.
- Repackage.

Purchaser. As used in Hazard communication, WAC 296-901-140, an employer who buys one or more hazardous chemicals to use in their workplace.

Pyrophoric. A chemical is pyrophoric if it will ignite spontaneously in the air when the temperature is 130°F (54.4°C) or below.

Qualified person. A person who has successfully demonstrated the ability to solve problems relating to the subject matter, work, or project, either by:

- Possession of a recognized degree, certificate, or professional standing; or
- Extensive knowledge, training and experience.

Railing or standard railing. A vertical barrier erected along exposed edges of a floor opening, wall opening, ramp, platform, or runway to prevent falls of persons.

Reassume jurisdiction. The department has decided to take back its control over a citation and notice being appealed.

Receptacle or receptacle outlet. As used in basic electrical rules, WAC 296-800-280 means outlets that accept a plug to supply electric power to equipment through a cord or cable.

Record. A record is any item, collection, or grouping of information. Examples include:

- Paper document.
- Microfiche.
- Microfilm.
- X-ray film.
- Computer record.

Refuge area.

- A protected space along an exit route that is separated from other spaces inside the building by a barrier with at least a one-hour fire resistance rating; or
- A floor in a building with an automatic sprinkler system that has at least two spaces that are separated by smoke-resistant partitions. See WAC 296-24-607 for requirements for automatic sprinkler systems.

Repeat violation. A violation is a repeat violation if the employer has been cited one or more times previously for a substantially similar hazard.

Responsible party. As used in Hazard communication, WAC 296-901-140. Someone who can provide appropriate information about the hazardous chemical and emergency procedures.

Rise. The vertical distance from the top of a tread to the top of the next higher tread.

Riser. The vertical part of the step at the back of a tread that rises to the front of the tread above.

Rungs. Rungs are the cross pieces on ladders that are used to climb up and down the ladder.

Runway. A passageway for persons, elevated above the surrounding floor or ground level, such as a footwalk along shafting or a walkway between buildings.

Safety data sheet (SDS). Written, printed, or electronic information (on paper, microfiche, or on-screen) that informs manufacturers, distributors, employers or employees about a hazardous chemical, its hazards, and protective measures as required by safety data sheet and label preparation, WAC 296-901-140.

Safety factor. The term safety factor means the ratio of when something will break versus the actual working stress or safe load when it is used.

Self-lighting or self-luminous. A light source that:

- Is illuminated by a self-contained power source other than batteries; and
- Operates independently from external power sources.

Serious violation. Serious violation must be deemed to exist in a workplace if there is a substantial probability that death or serious physical harm could result from a condition which exists, or from one or more practices, means, methods, operations, or processes which have been adopted or are in use in such workplace, unless the employer did not, and could not with the exercise of reasonable diligence, know of the presence of the violation.

Short-term exposure limit (STEL). An exposure limit, averaged over a short time period (usually measured for 15 minutes) that must not be exceeded during any part of an employee's workday.

Should. Should means recommended.

Single ladder. A type of portable ladder with one section.

It is distinguished by all of the following:

- It has one section.
- It cannot support itself.
- Its length cannot be adjusted.

Smoking. A person is smoking if they are:

- Lighting up.
- Inhaling.
- Exhaling.
- Carrying a pipe, cigar or cigarette of any kind that is burning.

Specific chemical identity. This term applies to chemical substances. It can mean the:

- Chemical name.
- Chemical Abstracts Service (CAS) registry number.
- Any other information that reveals the precise chemical designation of the substance.

Stair railing. A vertical barrier attached to a stairway with an open side to prevent falls. The top surface of the stair railing is used as a handrail.

Stairs or stairway. A series of steps and landings:

- Leading from one level or floor to another.
- Leading to platforms, pits, boiler rooms, crossovers, or around machinery, tanks, and other equipment.
- Used more or less continuously or routinely by employees, or only occasionally by specific individuals.
- With three or more risers.

Standard safeguard. Safety devices that prevent hazards by their attachment to:

- Machinery.
- Appliances.
- Tools.
- Buildings.
- Equipment.

These safeguards must be constructed of:

- Metal.
- Wood.
- Other suitable materials.

The department makes the final determination about whether a safeguard is sufficient for its use.

Step ladder. A portable ladder with:

- Flat steps.
- A hinge at the top allowing the ladder to fold out and support itself.
- Its length that cannot be adjusted.

Time weighted average (TWA_8). An exposure limit, averaged over 8 hours, that must not be exceeded during an employee's work shift.

Toeboard. A vertical barrier at floor level erected along all open sides or edges of a floor opening, platform, runway, ramp, or other walking/working surface to prevent materials, tools, or debris from falling onto persons passing through or working in the area below.

Toxic chemical. As used in first aid, WAC 296-800-150, is a chemical that produces serious injury or illness when absorbed through any body surface.

Toxic substance. Any chemical substance or biological agent, such as bacteria, virus, and fungus, which is any of the following:

- Listed in the latest edition of the National Institute for Occupational Safety and Health (NIOSH) *Registry of Toxic Effects of Chemical Substances* (RTECS).
- Shows positive evidence of an acute or chronic health hazard in testing conducted by, or known to, the employer.
- The subject of a safety data sheet kept by or known to the employer showing the material may pose a hazard to human health.

Toxicant. A substance that has the inherent capacity to produce personal injury or illness to individuals by absorption through any body surface.

Trade secret. Any confidential:

- Formula.
- Pattern.
- Process.
- Device.
- Information.
- Collection of information.

The trade secret is used in an employer's business and gives an opportunity to gain an advantage over competitors who do not know or use it.

See WAC 296-901-14018 for requirements dealing with trade secrets.

Tread. As used in stairs and stair railings, WAC 296-800-250 means the horizontal part of the stair step.

Tread run. As used in stairs and stair railings, WAC 296-800-250 means the distance from the front of one stair tread to the front of an adjacent tread.

Tread width. The distance from front to rear of the same tread including the nose, if used.

UL (Underwriters' Laboratories, Inc.). You will find these initials on electrical cords and equipment. The initials mean the cord or equipment meets the standards set by the Underwriters' Laboratories, Inc.

Unstable (reactive). As used in Hazard communication, WAC 296-901-140. An unstable or reactive chemical is one that in its pure state, or as produced or transported, will vigorously polymerize, decompose, condense, or will become self-reactive under conditions of shocks, pressure or temperature.

Use. As used in Hazard communication, WAC 296-901-140, means to:

- Package.
- Handle.
- React.
- Emit.
- Extract.
- Generate as a by-product.
- Transfer.

Vapor. The gaseous form of a substance that is normally in the solid or liquid state.

Voltage of a circuit. The greatest effective potential difference between any two conductors or between a conductor and ground.

Voltage to ground. The voltage between a conductor and the point or conductor of the grounded circuit. For undergrounded circuits, it is the greatest voltage between the conductor and any other conductor of the circuit.

Voltage, nominal. Nominal voltage is a value assigned to a circuit or system to designate its voltage class (120/240, 480Y/277, 600, etc.). The actual circuit voltage can vary from the value if it is within a range that permits the equipment to continue operating in a satisfactory manner.

WAC. This is an acronym for Washington Administrative Code, which are rules developed to address state law.

Water-reactive. As used in Hazard communication, WAC 296-901-140, a water-reactive chemical reacts with water to release a gas that is either flammable or presents a health hazard.

Watertight. Constructed so that moisture will not enter the enclosure or container.

Weatherproof. Constructed or protected so that exposure to the weather will not interfere with successful operation. Rainproof, raintight, or watertight equipment can fulfill the requirements for weatherproof where varying weather conditions other than wetness, such as snow, ice, dust, or temperature extremes, are not a factor.

Wet location. As used in basic electrical rules, WAC 296-800-280 means:

- Underground installations or in concrete slabs or masonry that are in direct contact with the earth.
- Locations that can be saturated by water or other liquids.
- Unprotected locations exposed to the weather (like vehicle washing areas).

WISHA. This is an acronym for the Washington Industrial Safety and Health Act.

Work area. As used in Hazard communication, WAC 296-901-140, a room or defined space in a workplace where hazardous chemicals are produced or used, and where employees are present.

Worker. See the definition for employee.

Working days. Means a calendar day, except Saturdays, Sundays, and legal holidays. Legal holidays include:

- New Year's Day - January 1;
- Martin Luther King, Jr. Day;
- Presidents' Day;
- Memorial Day;
- Independence Day - July 4;
- Labor Day;
- Veterans' Day - November 11;
- Thanksgiving Day;
- The day after Thanksgiving Day; and
- Christmas Day - December 25.

The number of working days must be calculated by not counting the first working day and counting the last working day.

Workplace.

- The term workplace means:
  - Any plant, yard, premises, room, or other place where an employee or employees are employed for the performance of labor or service over which the employer has the right of access or control, and includes, but is not limited to, all workplaces covered by industrial insurance under Title 51 RCW, as now or hereafter amended.
  - As used in Hazard communication, WAC 296-901-140 means an establishment, job site, or project, at one geographical location containing one or more work areas.

You. See definition of employer.

Your representative. Your representative is the person selected to act in your behalf.

WAC 296-800-100 Introduction. The safety and health core rules:

Your foundation for a safe and healthful workplace. This book contains basic safety and health rules that affect all employers and should cover almost everything small, nonmanufacturing employers need for a safe and healthful workplace. These core rules include requirements for your accident prevention program, personal protective equipment, first-aid, and basic electrical rules.

> **Note**: You may need to comply with other safety and health rules. For a complete list of these rules, go to https://lni.wa.gov/safety-health/safety-rules/find-safety-rules/#term=&filter=chapters&page=1

.

What are L&I, WISHA and DOSH?

The department of labor and industries (L&I) is a state agency that provides many different services:

- The division of occupational safety and health (DOSH) is responsible for workplace safety and health, including inspections and enforcement, consultation, technical assistance, training, education and grants.
- Workers' compensation (or industrial insurance), including claims management, rate setting, medical payments, and research.
- Specialty compliance services, including contractor registration, electrical inspections, boiler and elevator inspections, apprenticeship programs and employment standards.

Many of these services are available from L&I's regional offices. Go to this web site for the most current list. https://lni.wa.gov/agency/contact/#office-locations.

In 1973, the legislature passed the Washington Industrial Safety and Health Act (WISHA) see Revised Code of Washington (chapter 49.17 RCW). WISHA requires employers to provide safe and healthful workplaces for all employees. It gives L&I/DOSH the responsibility to establish and enforce workplace safety and health rules. These rules are the Washington Administrative Code (WAC).

How does DOSH work?

The Washington Industrial Safety and Health Act (WISHA) covers nearly all employers and employees in Washington, including employees who work for the state, counties, and cities. L&I inspectors within DOSH enforce safety and health rules by inspecting workplaces without advance notice including investigations of work-related deaths, injuries, and employees' complaints. When DOSH inspectors find a violation in a workplace, they issue a citation to the employer and a penalty may be attached. If you have questions about whether you are covered by WISHA, call 1-800-4BE SAFE (1-800-423-7233) or a local office of L&I. https://lni.wa.gov/agency/contact/#office-locations

What is OSHA and its relationship to DOSH?
The U.S. Congress created the Occupational Safety and Health Administration (OSHA) in 1971 to develop and enforce workplace safety and health rules throughout the country. States may choose to run their own safety and health programs as long as they are at least as effective as OSHA. Washington state has chosen to run its own program and most employers in the state, therefore, are subject to enforcement by L&I and not by federal OSHA.

In Washington state, OSHA covers workplaces with federal employees, nonfederal employees working on federal reservations and military bases, employees working on floating worksites (floating dry docks, fishing boats, construction barges), and employees working for tribal employers on tribal lands.

Does WISHA apply to you?

WISHA applies to almost every employer and employee in Washington. WISHA applies to you if:

- You hire someone to work for you as an employee, including workers from a temporary agency.
- You are hired to work for someone as their employee.
- You own your own business or you are a corporate officer and have elected industrial insurance coverage for yourself.
- You have a contract with someone else that primarily involves personal labor, even though you are not required to pay industrial insurance or unemployment insurance premiums.
- You volunteer your personal labor, or you have volunteers working for you who receive any benefit or compensation.

If you have any questions about your particular situation, call **1-800-4BE SAFE (1-800-423-7233)** or contact your local office of L&I for help https://lni.wa.gov/agency/contact/#office-locations

Are there other safety and health rules I need to know about?

In addition to the rules in the DOSH *Safety and Health Core Rules* book, there are other general safety and health rules that may apply to employers, depending upon the industry and workplace activities. See this web site for a complete list of safety and health rules administered by L&I. https://lni.wa.gov/safety-health/safety-rules/find-safety-rules/#term=&filter=chapters&page=1. If you have questions about these rules, call: 1-800-4BE SAFE (1-800-423-7233) or your local office of L&I.

How do the safety and health rules relate to fire, building and electrical codes?

Fire codes: Safety and health rules contain basic requirements for portable fire extinguishers, exit routes, housekeeping, storage, stairs and electrical hazards for the protection of employees in your workplace. The rules contained in this book are the most basic requirements to make sure that as an employer you provide a safe and healthy work environment. However, these are not the only rules regarding the requirements for portable fire extinguishers, exit routes, housekeeping, storage, stairs and electrical equipment. The fire marshal and local fire authorities enforce the Uniform Fire Code (UFC). DOSH and UFC differ in some areas, for example UFC requires exit sign lettering to be 6" or more and WISHA only states that the letters have to be clearly visible. Fire codes have more detailed and extensive requirements for the protection of the public than DOSH. Some codes overlap with DOSH requirements.

Building and electrical codes: WISHA rules are minimum requirements regardless of when the building was built or remodeled. Buildings must also comply with building and electrical codes at the time of construction. If you remodel, you must comply with the building and electrical codes applicable at that time. Building authorities and electrical inspection authorities enforce rules from the Uniform Building Code (UBC), and the National Electrical Code (NEC).

You are encouraged to call your local fire, building or electrical authority. For more information on the requirements in your area look in the government section of your phone book. Copies of these codes are available at your local library.

How can DOSH help employers and employees?

Employers can ask DOSH safety and health consultation staff for free, confidential consulting services in your workplace. DOSH safety and health professionals can examine your workplace and make recommendations about how to comply with the safety and health rules. If the consultant finds hazards, the employer will be given a reasonable period of time to correct the hazard without citation or penalty.

Sometimes you might have to wait for an appointment because of the demand for these services. You still must provide a safe workplace while you wait for a consultation.

DOSH offers a wide variety of free services. See the web site below for web access to the following information:

- Safety and health workshops held in locations throughout the state.
- A comprehensive safety and health video lending library.
- Safety and health publications geared for both employer and employee.
- Web site with online publications and learning opportunities.
    - https://lni.wa.gov/safety-health/safety-training-materials/

Note: By law, DOSH consultants do not have any enforcement authority.

Employer responsibilities: Safe workplace

WAC 296-800-110 Employer responsibilities: Safe workplace

Your responsibility: To provide a safe and healthy workplace free from recognized hazards.

Important:
Use these rules where there are no specific rules applicable to the particular hazard.

You must meet the requirements	***in this section***
Provide a workplace free from recognized hazards	WAC 296-800-11005
Provide and use means to make your workplace safe	WAC 296-800-11010
Prohibit employees from entering, or being in, any workplace that is not safe	WAC 296-800-11015
Construct your workplace so it is safe	WAC 296-800-11020
Prohibit alcohol and narcotics from you workplace	WAC 296-800-11025
Prohibit employees from using tools and equipment that are not safe	WAC 296-800-11030
Establish, supervise, and enforce rules that lead to a safe and healthy work environment that are effective in practice	WAC 296-800-11035
Control chemical agents	WAC 296-800-11040
Protect employees from biological agents	WAC 296-800-11045

> **Note**: Employees may discuss and participate in any WISHA safety and health related practice and may refuse to perform dangerous tasks without fear of discrimination. Discrimination includes: dismissal, demotion, loss of seniority, denial of a promotion, harassment, etc. See chapter 296-360 WAC, Discrimination pursuant to RCW 49.17.160, for a complete description of discrimination and the department's responsibility to protect employees.

WAC 296-800-11005 Provide a workplace free from recognized hazards.

You must provide your employees a workplace free from recognized hazards that are causing, or are likely to cause, serious injury or death.

> **Note**: A hazard is recognized if it is commonly known in the employer's industry, or if there is evidence that the employer knew or should have known of the existence of the hazard, or if it can be established that any reasonable person would have recognized the hazard.

WAC 296-800-11010 Provide and use means to make your workplace safe.

You must provide and use safety devices, safeguards, and use work practices, methods, processes, and means that are reasonably adequate to make your workplace safe.

(1) You must not remove, displace, damage, destroy or carry off any safety device, safeguard, notice or warning, furnished for use in any employment or place of employment.

(2) You must not interfere with use of any of the above.

(3) You must not interfere with the use of any method or process adopted for the protection of any employee.

(4) You must everything reasonably necessary to protect the life and safety of your employees.

WAC 296-800-11015 Prohibit employees from entering, or being in, any workplace that is not safe.

You must prohibit employees from entering, or being in, any workplace that is not safe.

WAC 296-800-11020 Construct your workplace so it is safe.

You must not construct, or cause to be constructed, a workplace that is not safe. This rule applies to employers, owners, and renters of property used as a place of employment.

WAC 296-800-11025 Prohibit alcohol and narcotics from your workplace.

(1) You must prohibit alcohol and narcotics from your workplace, except in industries and businesses that produce, distribute, or sell alcohol and narcotic drugs.

(2) You must prohibit employees under the influence of alcohol or narcotics from the worksite.

EXEMPTION:
Employees who are taking prescription drugs, as directed by a physician or dentist, are exempt from this section, if the employees are not a danger to themselves or other employees.

WAC 296-800-11030 Prohibit employees from using tools and equipment that are not safe.

You must take responsibility for the safe condition of tools and equipment used by employees.

> **Note:** This applies to all equipment, materials, tools, and machinery whether owned by the employer or another firm or individual.

WAC 296-800-11035 Establish, supervise, and enforce rules that lead to a safe and healthy work environment that are effective in practice.

You must establish, supervise, and enforce rules that lead to a safe and healthy work environment that are effective in practice.

WAC 296-800-11040 Control Chemical Agents.

(1) You must control chemical agents in a manner that they will not present a hazard to your workers; or

(2) You must protect workers from the hazard of contact with, or exposure to, chemical agents.

> **Note**: Pesticides are considered to be chemical agents. As required by this rule, you must control them or provide protection to workers from exposure to pesticide hazards. Pesticide manufacturers supply precautionary statements in the information provided with the pesticide that tells you how to protect your workers from these hazards.

WAC 296-800-11045 Protect employees from biological agents.

(1) You must protect employees from exposure to hazardous concentrations of biological agents that may result from processing, handling, or using materials or waste.

> **Note**: Potential exposure to biological agents occurs during cleanup, or other tasks, where employees handle:
>
> – Animals or animal waste
> – Body fluids
> – Biological agents in a medical research lab
> – Mold or mildew

Check The Center of Disease Control web site (www.cdc.gov) to find published guidelines and information on safe handling and protection from specific biological agents (examples: Hanta virus, TB).

(2) You must warn employees of biohazards.

(3) You must use signs, tags, or labels to identify:

(a) The actual or potential presence of a biohazard; and

(b) Equipment, containers, rooms, materials, experimental animals, or any combinations of these that contain viable hazardous agents.

Definition:

Biohazard. Those infectious agents presenting a risk or potential risk of death, injury or illness to employees.

You must make sure the sign, tag, or label includes the biohazard symbol that is designed and proportioned in the illustration that follows.

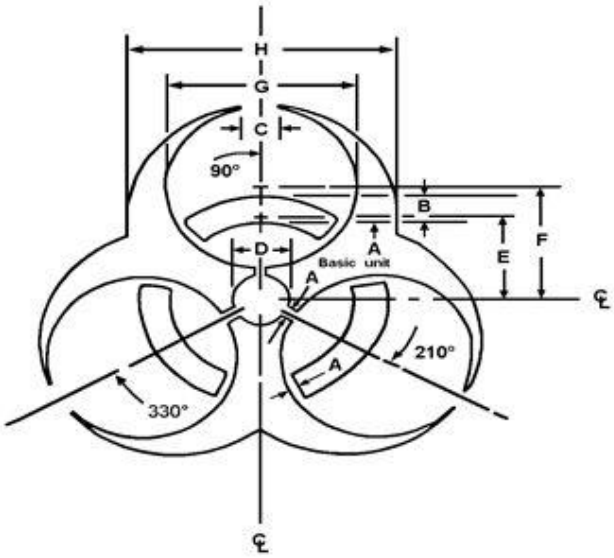

Dimension	A	B	C	D	E	F	G	H
Units	1	3½	4	6	11	15	21	30

You must make sure that there is sufficient contrast for the symbol to be clearly defined, if the sign, tag, or label has a background color.

Reference: Additional requirements for biohazard signs, tags, and labels may apply. See WAC 296-823-14025 and 296-823-18040 of the Bloodborne Pathogens book.

Note:

- It is recommended that the sign, tag, or label have a key color of fluorescent orange or orange-red and lettering or symbols in a contrasting color.
- Appropriate wording may be used in association with the symbol to indicate:
  - The nature or identity of the hazard;
  - Name of individual responsible for its control;
  - Precautionary information; or
  - Other information
- This information should not be written on the symbol.

Employee responsibilities

WAC 296-800-120 Rule.

You must play an active role in creating a safe and healthy workplace and comply with all applicable safety and health rules.

Note: Employees may discuss and participate in any WISHA safety and health related practice and may refuse to perform dangerous tasks without fear of discrimination. Discrimination includes: Dismissal, demotion, loss of seniority, denial of a promotion, harassment, etc. see chapter 296-360 WAC, Discrimination) pursuant to RCW 49.17.160 for a complete description of discrimination and the department's responsibility to protect employees.

WAC 296-800-12005 Employee responsibilities.

Employees must:

(1) Study and follow all safe practices that apply to their work.

(2) Coordinate and cooperate with all other employees in the workplace to try to eliminate on-the-job injuries and illnesses.

(3) Apply the principles of accident prevention in their daily work and use proper safety devices and protective equipment as required by their employment or employer.

(4) Take care of all personal protective equipment (PPE) properly.

(5) Not wear torn or loose clothing while working around machinery.

Note: Things such as clothing, hair, and jewelry can get caught in machinery and be a hazard on the job.

(6) Report promptly to their supervisor every industrial injury or occupational illness.

(7) Not remove, displace, damage, or destroy or carry off any safeguard, notice, or warning provided to make the workplace safe.

(8) Not interfere with use of any safeguard by anyone in the workplace.

(9) Not interfere with the use of any work practice designed to protect them from injuries.

(10) Do everything reasonably necessary to protect the life and safety of employees.

Safety Committees and safety meetings

WAC 296-800-130 Safety committees/safety meetings.

Important:
This rule requires you to have a method of communicating and evaluating safety and health issues brought up by you or your employees in your workplace. Larger employers **must** establish a safety committee. Smaller employers have the choice of either establishing a safety committee or holding safety meetings with a management representative present. There is a difference between a safety committee and a safety meeting. • A safety committee is an organizational structure where members represent a group. This gives everyone a voice but keeps the meeting size to an effective number of participants. • A safety meeting includes all employees and a management person is there to ensure that issues are addressed. Typically, the safety committee is an effective safety management tool for a larger employer and safety meetings are more effective for a smaller employer.

Your responsibility: You must establish a safety committee or hold safety meetings to create and maintain a safe and healthy workplace for all employees.

You must meet the requirements	*in this section*
Establish and conduct safety committees	WAC 296-800-13020
Follow these rules to conduct safety meetings	WAC 296-800-13025

WAC 296-800-13020 Establish and conduct safety committees.

IF:	*THEN:*
You employ 11 or more employees on the same shift at the same location	You must establish a safety committee

(1) You must establish a safety committee. Make sure your committee:

(a) Has employee-elected and employer-selected members.

(i) The number of employee-elected members must equal or exceed the number of employer-selected members.

Note: Employees selected by the employees bargaining representative or union qualify as employee-elected.

(ii) The term of employee-elected members must be a maximum of one year. (There is no limit to the number of terms a representative can serve.)

(iii) If there is an employee-elected member vacancy, a new member must be elected prior to the next scheduled meeting.

(b) Has an elected chairperson.

(c) Determines how often, when, and where, the safety committee will meet.

Note:

- Meetings should be one hour or less, unless extended by a majority vote of the committee.
- If the committee cannot agree on the frequency of meetings, the department of labor and industries regional safety consultation representative should be consulted for recommendations. (See the resources section of this book for contacts.)

(2) Your safety committee must cover these topics:

(a) Review safety and health inspection reports to help correct safety hazards.

(b) Evaluate the accident investigations conducted since the last meeting to determine if the cause(s) of the unsafe situation was identified and corrected.

(c) Evaluate your workplace accident and illness prevention program and discuss recommendations for improvement, if needed.

(d) Document attendance.

(e) Write down subjects discussed.

(3) You must record meetings. Prepare minutes for each safety committee and:

(a) Preserve them for one year.

(b) Make them available for review by safety and health consultation personnel of the department of labor and industries.

WAC 296-800-13025 Follow these rules to conduct safety meetings.

IF:	*THEN:*
You have 10 or fewer employees; or If you have 11 or more employees that • Work on different shifts with 10 or fewer employees on each shift; or • Work in widely separate locations with 10 or fewer employees at each location	You may choose to hold a safety meeting instead of a safety committee

(1) You must do the following for safety meetings. Make sure your safety meetings:

(a) Are held monthly. You may meet more often to discuss safety issues as they come up.

(b) Have at least one management representative.

(2) Your safety committee must cover these topics.

(a) Review safety and health inspection reports to help correct safety hazards.

(b) Evaluate the accident investigations conducted since the last meeting to determine if the cause(s) of the unsafe situation was identified and corrected.

(c) Evaluate your workplace accident and illness prevention program and discuss recommendations for improvement, if needed.

(d) Document attendance.

(e) Write down subjects discussed.

Note: There are no formal documentation requirements for safety meetings except for writing down who attended and the topics discussed.

Accident prevention program

WAC 296-800-140 Accident prevention program.

Your responsibility: You must establish, supervise, and enforce an accident prevention program (APP) that is effective in practice. (You may call this your total safety and health plan).

You must meet the requirements	*in this section*
Develop a formal, written accident prevention program	WAC 296-800-14005
Develop, supervise, implement, and enforce safety and health training programs that are effective in practice	WAC 296-800-14020
Make sure your accident prevention program is effective in practice	WAC 296-800-14025

WAC 296-800-14005 Develop a formal, written accident prevention program.

(1) You must develop a formal accident prevention program that is outlined in writing. The program must be tailored to the needs of your particular workplace or operation and to the types of hazards involved.

> **Note**: The term "accident prevention program" refers to your written plan to prevent accidents, illnesses, and injuries on the job. Your accident prevention program may be known as your safety and health plan, injury prevention program, or by some other name.

(2) You must make sure your Accident Prevention Program contains at least the following elements:

(a) A safety orientation:

(i) A description of your total safety and health program.

(ii) On-the-job orientation showing employees what they need to know to perform their initial job assignments safely.

(iii) How and when to report on-the-job injuries including instruction about the location of first-aid facilities in your workplace.

(iv) How to report unsafe conditions and practices.

(v) The use and care of required personal protective equipment (PPE).

(vi) What to do in an emergency, including how to exit the workplace.

(vii) Identification of hazardous gases, chemicals, or materials used on-the-job and instruction about the safe use and emergency action to take after accidental exposure.

(b) A safety and health committee (WAC 296-800-130)

WAC 296-800-14020 Develop, supervise, implement, and enforce safety and health training programs that are effective in practice.

(1) You must develop, supervise, implement, and enforce training programs to improve the skill, awareness, and competency of all your employees in the field of occupational safety and health.

(2) You must make sure training includes on-the-job instruction to employees prior to their job assignment about hazards such as:

(a) Safe use of powered materials-handling equipment such as forklifts, backhoes, etc.

(b) Safe use of machine tool operations.

(c) Use of toxic materials.

(d) Operation of utility systems.

WAC 296-800-14025 Make sure your accident prevention program is effective in practice.

You must establish, supervise, and enforce your accident prevention program in a manner that is effective in practice.

WAC 296-800-14035 2019 Novel coronavirus prohibited business activities and compliance with conditions for operations.

(1) Where a business activity is prohibited by an emergency proclamation an employer shall not allow employees to perform work.

(2) Employers must comply with all conditions for operation required by emergency proclamation issued under RCW 43.06.220, including Safe Start phased reopening requirements for all business and any industry specific requirements.

(3) An “emergency proclamation” means a proclamation that is in effect, including proclamation amendments and conditions, and issued under RCW 43.06.220 and is in effect at the time the emergency rule was adopted.

First aid

WAC 296-800-150 First Aid.

Your responsibility: You must make sure first-aid trained personnel are available to provide quick and effective first aid.

You must meet the requirements	*in this section*
Make sure that first-aid personnel are available to provide quick and effective first aid	WAC 296-800-15005
Make sure appropriate first-aid supplies are readily available	WAC 296-800-15020
Make sure emergency washing facilities are functional and readily accessible	WAC 296-800-15030
Inspect and activate your emergency washing facilities	WAC 296-800-15035
Make sure supplemental flushing equipment provides sufficient water	WAC 296-800-15040

Note:

- Employers who require their employees to provide first aid must comply with chapter 296-823 WAC, Occupational exposure to bloodborne pathogens.
- Your workplace may be covered by separate first-aid rules. If you do any of the types of work listed below, you must follow separate industry specific rules:

Industry	**Chapter (WAC)**
Agriculture	296-307
Compressed air	296-36
Construction	296-155
Firefighting	296-305
Logging	296-54
Sawmill	296-78
Ship building and repairing	296-304

You can get copies of these rules by calling 1-800-4BE SAFE (1-800-423-7233), or by going to http://www.lni.wa.gov/

WAC 296-800-15005 Make sure that first-aid trained personnel are available to provide quick and effective first aid.

You must comply with the first-aid training requirements of 29 C.F.R. 1910.151(b) which states:

> "In the absence of an infirmary, clinic, or hospital in near proximity to the workplace, which is used for the treatment of all injured employees, a person or persons must be adequately trained to render first aid."

WAC 296-800-15020 Make sure appropriate first-aid supplies are readily available.

(1) You must make sure first-aid supplies are readily available.

(2) You must make sure first-aid supplies at your workplace are appropriate to:

(a) Your occupational setting.

(b) The response time of your emergency medical services.

> **Note**: First-aid kits from your local retailer or safety supplier should be adequate for most nonindustrial employers.

(3) You must make sure that first-aid supplies are:

(a) Easily accessible to all your employees.

(b) Stored in containers that protect them from damage, deterioration, or contamination. Containers must be clearly marked, not locked, and may be sealed.

(c) Able to be moved to the location of an injured or acutely ill worker.

WAC 296-800-15030 Make sure emergency washing facilities are functional and readily accessible.

(1) You must provide an emergency shower:

(a) When there is potential for major portions of an employee's body to contact corrosives, strong irritants, or toxic chemicals.

(b) That delivers water to cascade over the user's entire body at a minimum rate of 20 gallons (75 liters) per minute for fifteen minutes or more.

(2) You must provide an emergency eyewash:

(a) When there is potential for an employee's eyes to be exposed to corrosives, strong irritants, or toxic chemicals.

(b) That irrigates and flushes both eyes simultaneously while the user holds their eyes open.

(c) With an on-off valve that activates in one second or less and remains on without user assistance until intentionally turned off.

(d) That delivers at least 0.4 gallons (1.5 liters) of water per minute for fifteen minutes or more.

Note: Chemicals that require emergency washing facilities:

- You can determine whether chemicals in your workplace require emergency washing facilities by looking at the safety data sheet (SDS) or similar documents. The SDS contains information about first-aid requirements and emergency flushing of skin or eyes.
- For chemicals developed in the workplace, the following resources provide information about first-aid requirements:
  - NIOSH Pocket Guide to Chemical Hazards
    DHHS (NIOSH) Publication No. 97-140
    https://www.cdc.gov/niosh/npg/
  - Threshold Limit Values for Chemical Substances and Physical Agents American Conference of Governmental Industrial Hygienists (ACGIH)

(3) You must make sure emergency washing facilities:

(a) Are located so that it takes no more than ten seconds to reach.

(b) Are kept free of obstacles blocking their use.

(c) Function correctly.

(d) Provide the quality and quantity of water that is satisfactory for emergency washing purposes.

Note:

- If water in emergency washing facilities is allowed to freeze, they will not function correctly. Precautions need to be taken to prevent this from happening.
- The travel distance to an emergency washing facility should be no more than fifty feet (15.25 meters).
- For further information on the design, installation, and maintenance of emergency washing facilities, see American National Standards Institute (ANSI) publication Z358.1-1998, Emergency Eyewash and Shower Equipment. Emergency washing facilities that are designed to meet ANSI Z358.1-1998 also meet the requirements of this standard. The ANSI standard can be obtained from the American National Standards Institute, 1430 Broadway, New York, New York 10018.

Reference:

- Training in the location and use of your emergency washing facilities is required under the hazard communication rule, WAC 296-901-140, and the accident prevention program rule, WAC 296-800-140.
- All emergency washing facilities using "not fit for drinking" (nonpotable) water must have signs stating the water is "not fit for drinking." See WAC 296-800-23010.

WAC 296-800-15035 Inspect and activate your emergency washing facilities.

(1) You must make sure all plumbed emergency washing facilities are inspected once a year to make sure they function correctly.

Note: Inspections should include:

- Examination of the piping
- Making sure that water is available at the appropriate temperature and quality
- Activation to check that the valves and other hardware work properly
- Checking the water flow rate.

(2) You must make sure plumbed emergency eyewashes and hand-held drench hoses are activated weekly to check the proper functioning of the valves, hardware, and availability of water.

(3) You must make sure all self-contained eyewash equipment and personal eyewash units are inspected and maintained according to manufacturer instructions

(a) Inspections to check proper operation must be done once a year.

(b) Sealed personal eyewashes must be replaced after the manufacturer's expiration date.

Note: Most manufacturers recommend replacing fluid in open self-contained eyewashes every six months. The period for sealed containers is typically two years.

WAC 296-800-15040 Make sure supplemental flushing equipment provides sufficient water.

> **Note**: Supplemental flushing equipment cannot be used in place of required emergency showers or eyewashes.

(1) You must make sure hand-held drench hoses deliver at least 3.0 gallons (11.4 liters) of water per minute for fifteen minutes or more.

> **Note**: Why use a drench hose? A drench hose is useful when:
>
> - The spill is small and does not require an emergency shower
> - Used with a shower for local rinsing, particularly on the lower extremities.

(2) You must make sure personal eyewash equipment delivers only clean water or other medically approved eye flushing solutions.

Personal protective equipment (PPE)

WAC 206-800-160 Personal protective equipment (PPE)

Your responsibility: You must make sure that your employees have, use, and care for the appropriate personal protective equipment (PPE).

PPE is an item or items used to protect the eyes, face, head, body, arms, hands, legs, and feet such as goggles, helmets, head covers, gloves, rubber slickers, disposable coveralls, safety shoes, protective shields, and barriers.

You must meet the requirements	*in this section*
Compliance duties owed to each employee	WAC 296-800-16002
Do a hazard assessment for PPE	WAC 296-800-16005
Document your hazard assessment for PPE	WAC 296-800-16010
Select appropriate PPE for your employees	WAC 296-800-16015
Provide PPE to your employees	WAC 296-800-16020
Train your employees to use PPE	WAC 296-800-16025
Retrain employees to use PPE, if necessary	WAC 296-800-16030
Document PPE training	WAC 296-800-16035
Require your employees to use necessary PPE on the job	WAC 296-800-16040
Keep your PPE safe and in good condition	WAC 296-800-16045
Make sure your employees use appropriate face and eye protection	WAC 296-800-16050
Make sure your employees use appropriate head protection	WAC 296-800-16055
Make sure your employees use appropriate foot protection	WAC 296-800-16060
Make sure your employees use appropriate hand protection	WAC 296-800-16065
Make sure your employees are protected from drowning	WAC 296-800-16070

EXEMPTION:
WAC 296-800-16015, 296-800-16025, 296-800-16030, and 296-800-16035 do not apply to electrical protective equipment or respiratory protection. See chapters 296-24 WAC, Part L and chapter 296-842 WAC, for rules about these types of protective equipment.

WAC 296-800-16002 Compliance duties owed to each employee.

(1) You must provide personal protective equipment. Standards in this part requiring the employer to provide personal protective equipment (PPE), including respirators and other types of PPE, because of hazards to employees impose a separate compliance duty with respect to each employee covered by the requirement. The employer must provide PPE to each employee required to use the PPE, and each failure to provide PPE to an employee may be considered a separate violation.

(2) You must provide training. Standards in this part requiring training on hazards and related matters, such as standards requiring that employees receive training or that the employer train employees, provide training to employees, or institute or implement a training program, impose a separate compliance duty with respect to each employee covered by the requirement. The employer must train each affected employee in the manner required by the standard, and each failure to train an employee may be considered a separate violation.

WAC 296-800-16005 Do a hazard assessment for PPE.

You must look for and identify hazards or potential hazards in your workplace and determine if PPE is necessary on the job.

Note: PPE alone should not be relied on to provide protection for your employees. PPE should be used after all other reasonable means of reducing hazards have been carried out. Identifying hazards in your workplace should be built into your regular routine. You should take active steps to get rid of all identified hazards. For example, you can:

- Consider other ways to get hazardous jobs done.
- Reduce hazardous materials or processes.
- Apply engineering controls to reduce or eliminate hazards.

WAC 296-800-16010 Document your hazard assessment for PPE.

You must verify that a hazard assessment for PPE has been done at your workplace and complete a written certification (paper or electronic format) that includes the:

(1) Name of the workplace.

(2) Address of the workplace you inspected for hazards.

(3) Name of person certifying that a workplace hazard assessment was done.

(4) Date(s) the workplace hazard assessment was done.

(5) Statement identifying the document as the certification of hazard assessment for PPE for the workplace.

WAC 296-800-16015 Select appropriate PPE for your employees.

(1) You must select appropriate PPE

(a) Select appropriate PPE for your employees if hazards are present, or likely to be present.

(b) Select PPE for each at-risk employee to use for protection from the hazards identified in your workplace hazard assessment.

(2) You must select PPE that properly fits each at-risk employee.

Note: The hazards in your workplace have special rules that apply to them. For information about PPE for specific workplaces, see these WISHA rule books:

Construction Work Chapter 296-155 WAC
Electric power generation, transmission, and distribution 296-45 WAC
Firefighters Chapter 296-305 WAC
General Occupational Health Standards Chapter 296-62 WAC
General Safety and Health Standards Chapter 296-24 WAC
Logging Operations Chapter 296-54 WAC
Pulp, Paper, & Paperboard Mills and Converters Chapter 296-79 WAC
Ship Repairing, Ship Building and Shipbreaking Chapter 296-304 WAC
Ski Area Facilities and Operation Chapter 296-59 WAC
Telecommunication Chapter 296-32 WAC
Textile Industry Chapter 296-301 WAC

Note: For help in selecting PPE for your employees, you have several options. You may:

- Visit the OSHA web site https://www.osha.gov/personal-protective-equipment.
- Call 1-800-4BE SAFE (1-800-423-7233) for guidelines for selecting PPE.
- Consult with safety and health professionals knowledgeable in this area. See Resource Section for links to professional organizations.
- Discuss PPE choices with your employees.

WAC 296-800-16020 Provide PPE to your employees.

You must provide PPE at no cost to employees if the PPE is:

(1) The type that would not reasonably or normally be worn away from the workplace, such as single use or disposable PPE.

(2) Required to comply with a safety and health standard to protect employees wherever hazards exist from:

(a) Processes;

(b) Environmental hazards;

(c) Physical, chemical, or radiological hazards; or

(d) Mechanical irritants that could cause injury or impairment to the function of any body part through absorption, inhalation, or physical contact.

Table-X: Employer Responsibility for Providing PPE
****This table provides examples only and is not all-inclusive.***

Part of Body	PPE employers are required to provide at no cost to employees.	Items in which employer payment is not required.
Head	Bump caps. Hard hat. Nonconductive head protection.	—
Eye and Face	Face shields. Goggles. Laser safety goggles. Nonprescription eye protection. Prescription eyewear inserts/lenses for full-face respirators. Welding and diving helmets.	Nonspecialty prescription safety eyewear.
Ear	Hearing protection.	—
Hand/ Arm	Aluminized gloves. Barrier creams (unless used solely for weather-related protection). Chemical resistant gloves/aprons/ clothing. Mesh cut proof gloves. Mesh or leather aprons. Nonspecialty gloves if required to protect from dermatitis, severe cuts, or abrasions. Rubber insulating gloves. Rubber sleeves.	Hand protection used only for keeping clean or for cold weather with no safety or health consideration.
Foot	Metatarsal foot protection.	Nonspecialty safety-toe protective footwear such as steel-toe shoes or boots.

Part of Body	PPE employers are required to provide at no cost to employees.	Items in which employer payment is not required.
	Rubber boots with steel toes. Shoe covers - Toe caps and metatarsal guards. Special boots for longshoremen working logs.	Sturdy work shoes. Lineman's boots. Logging boots required under chapter 296-54 WAC.
Other	Atmosphere-supplying respirators (escape only). Climbing ensembles used by linemen such as belts and climbing hooks. Level A - Fully encapsulated chemical protective suits. Level B - Chemical protective clothing. Personal fall arrest systems. Personal fall restraint systems. Firefighting PPE (helmet, gloves, boots, proximity suits, full gear). Ladder safety device belts. Personal floatation devices (life jackets). Class II or III high visibility garments that meet ANSI 107-2004 specifications. Respiratory protection.	Long sleeve shirts. Long pants. Ordinary cold weather gear (coats, parkas, cold weather gloves, winter boots). Ordinary rain gear. Dust mask/respirators used under the voluntary use provisions in chapter 296-842 WAC. Back belts. Sunglasses. Sunscreen.

Part of Body	PPE employers are required to provide at no cost to employees.	Items in which employer payment is not required.
	SCBA (self-contained breathing apparatus). Welding PPE. Window cleaner's safety straps. Items such as aprons, lab coats, goggles, disposable gloves, shoe covers, etc., used in medical/ laboratory settings to protect from exposure to infectious agents.	

WAC 296-800-16025 Train your employees to use PPE.

(1) You must communicate your PPE selection decision to each at-risk employee.

(2) You must provide training to each employee who is required to use PPE on the job. Each affected employee must be trained to know at least the following:

- (a) When PPE is necessary.
- (b) What PPE is necessary.
- (c) How to put on, take off, adjust, and wear PPE.
- (d) Limitations of PPE.
- (e) Proper care, maintenance, useful life, and disposal of PPE.

(3) Make sure, before an employee is allowed to perform work requiring the use of PPE, that the employee can:

- (a) Demonstrate an understanding of the training specified above; and
- (b) Demonstrate the ability to use PPE properly.

WAC 296-800-16030 Retrain employees to use PPE, if necessary.

You must retrain an employee when you have reason to believe the understanding, motivation, and skills required to use the PPE has not been retained. Circumstances where retraining is required include:

(1) Changes in the workplace that make previous training out of date.

(2) Changes in the types of PPE to be used make previous training out of date.

(3) Work habits or demonstrated knowledge indicate that the employee has not retained the necessary understanding, skill, or motivation to use PPE.

WAC 296-800-16035 Document PPE training.

You must document in writing that each employee using PPE has received and understood the required training. This documentation must include:

(1) Name of each employee.

(2) Date(s) of training.

(3) Subject of the training.

> **Note**: Documentation may be stored on a computer as long as it is available to safety and health personnel from the department of labor and industries.

WAC 296-800-16040 Require your employees to use necessary PPE on the job.

You must require your employees to use necessary PPE on the job.

WAC 296-800-16045 Keep PPE in safe and good condition.

(1) You must make sure all PPE is safe for the work to be performed. It must:

   (a) Be durable.

   (b) Fit snugly.

   (c) Not interfere with the employee's movements.

(2) You must make sure PPE is used and maintained in a clean and reliable condition.

   Defective equipment **MUST NOT** be used.

(3) You must make sure if employees provide their own PPE, that it is adequate for the workplace hazards, and maintained in a clean and reliable condition.

WAC 296-800-16050 Make sure your employees use appropriate eye and face protection.

(1) You must make sure that employees exposed to hazards that could injure their eyes and/or face use appropriate protection. Examples of these hazards include:

(a) Flying particles.

(b) Molten metal.

(c) Liquid chemicals.

(d) Acids or caustic liquids.

(e) Chemical gases or vapors.

(f) Any light that could injure the eyes such as lasers, ultraviolet, or infrared light.

(g) Objects that puncture.

(2) You must make sure employees exposed to hazards from flying objects have eye protection with side protection, such as safety glasses with clip-on or slide-on side shields.

(3) You must make sure eye protection for employees who wear prescription lenses:

(a) Incorporates the prescription into the design of the eye protection; or

(b) Is large enough to be worn over the prescription lenses without disturbing them.

(4) You must make sure PPE used to protect the eyes and face meet the specifics of either the 1989 version, the 1998 revision, or the 2003 version of ANSI Z87.1, American National Standard Practice for Occupational .and Education Eye and Face Protection.

(5) Other protective eye and face protection devices may be used if the employer demonstrates that they are at least as effective as those constructed in accordance with one of the above consensus standards.

Note: ANSI is the American National Standards Institute that publishes nationally recognized safety and health requirements. Their address is:

ANSI (American National Standards Institute)
1819 L Street, NW
Washington, DC 20036
Phone:202 293-8020
Fax:202 293-9287
http://www.ansi.org

296-800-16055 Make sure your employees use appropriate head protection.

(1) You must make sure employees wear appropriate protective helmets.

(a) Where employees are exposed to hazards that could cause a head injury. Examples of this type of hazard include:

(i) Flying or propelled objects.

(ii) Falling objects or materials.

(b) Where employees are working around or under scaffolds or other overhead structures.

(2) Head protection must comply with any of the following consensus standards:

(a) American National Standards Institute (ANSI) Z89.1-2009, "American National Standard for Industrial Head Protection";

(b) American National Standards Institute (ANSI) Z89.1-2003, "American National Standard for Industrial Head Protection";

(c) American National Standards Institute (ANSI) Z89.1-1997, "American National Standard for Personnel Protection—Protective Headwear for Industrial Workers—Requirements."

(d) You may use protective helmets that do not meet these ANSI standards if you can demonstrate that they are equally effective as those constructed in accordance with the above ANSIs.

(3) You must make sure employees working near exposed electrical conductors that could contact their head wear a protective helmet designed (that meet the above ANSI standards) to reduce electrical shock hazard.

Caps with metal buttons or metal visors must **not** be worn around electrical hazards.

(4) You must make sure employees working around machinery or in locations that present a hair-catching or fire hazard wear caps or head coverings that completely cover their hair.

(a) Employees must wear a hair net that controls all loose ends when:

(i) Hair is as long as the radius of pressure rolls with exposed in-running nip points.

(ii) Hair is twice as long as the circumference of exposed revolving shafts or tools in fixed machines.

(b) Employees must wear a hair covering of solid material when:

The employee is exposed to an ignition source and may run into an area containing category 1 or 2 flammable liquids, such as ether, benzene, or category 3 flammable liquids with a flashpoint below 100°F (37.8°C), or combustible atmospheres if their hair is on fire.

WAC 296-800-16060 Make sure your employees use appropriate foot protection.

(1) You must use appropriate foot protection:

(a) Where employees are exposed to hazards that could injure their feet. Examples of these hazards are:

(i) Falling objects.

(ii) Rolling objects.

(iii) Piercing/cutting injuries.

(iv) Electrical hazards.

(b) That meets the specifications of one of the following consensus standards:

(i) ASTM F-2412-2005, Standard Test Methods for Foot Protection, and ASTM F-2413-2005, Standard Specification for Performance Requirements for Protective Footwear.

(ii) ANSI Z41-1999, American National Standard for Personal Protection--Protective Footwear.

(iii) ANSI Z41-1991, American National Standard for Personal Protection--Protective Footwear.

(c) Protective footwear that does not meet these standards may be used if you demonstrate that it is equally effective as that constructed in accordance with one of the above consensus standards.

(2) You must make sure your employees wear calks or other suitable footwear to protect against slipping while they are working on top of logs.

WAC 296-800-16065 Make sure your employees use appropriate hand protection.

(1) You must make sure employees exposed to hazards that could injure their hands use appropriate hand protection. Examples of these hazards include:

(a) Absorbing harmful substances.

(b) Severe cuts, lacerations or abrasions.

(c) Punctures.

(d) Chemical burns and/or thermal burns.

(e) Harmful temperature extremes.

(2) You must make sure when choosing hand protection, you consider how well the hand protection performs relative to the:

(a) Task.

(b) Conditions present.

(c) Duration of use.

(d) Hazards.

(e) Potential hazards.

WAC 296-800-16070 Make sure your employees are protected from drowning.

(1) You must provide and make sure your employees wear personal flotation devices when they work in areas where the danger of drowning exists, such as:

(a) On the water.

(b) Over the water.

(c) Alongside the water.

Note: Employees are not exposed to the danger of drowning when:

- Employees are working behind standard height and strength guardrails.
- Employees are working inside operating cabs or stations that eliminate the possibility of accidentally falling into the water.
- Employees are wearing an approved safety belt with a lifeline attached that prevents the possibility of accidentally falling into the water.

(2) You must provide your employees with PFDs approved by the United States Coast Guard for use on commercial or merchant vessels. The following are appropriate or allowable United States Coast Guard-approved PFDs:

Type of PFD	***General Description***
Type I	Off-shore Life Jacket effective for all waters or where rescue may be delayed.
Type II	Near-Shore Buoyant Vest-intended for calm, inland water or where there is a good chance of quick rescue.
Type III	Flotation aid-good for calm, inland water, or where there is a good chance of rescue.
Type V	Flotation aids such as boardsailing vests, deck suits, work vests and inflatable PFDs marked for commercial use.

Note:

- Commercially available PFDs are marked or imprinted with the type of PFD.
- Type IV PFDs are throwable devices. They are used to aid persons who have fallen into the wat er.

(3) You must inspect PFDs before and after each use for defects and make sure that defective PFDs are not used.

(4) You must provide approved life rings with an attached line on all docks, walkways, and fixed installations on, or adjacent to, water more than 5 feet deep.

(a) Life rings must:

(i) Be United States Coast Guard approved 30 inch size.

(ii) Have attached lines that are at least 90 feet in length.

(iii) Have attached lines at least 1/4 inch in diameter.

(iv) Have attached lines with a minimum breaking strength of 500 pounds.

(v) Be spaced no more than 200 feet apart.

(vi) Be kept in easily visible and readily accessible locations.

(b) Life rings and attached lines must:

(i) Be maintained to retain at least 75 percent of their designed buoyancy and strength.

(ii) Be provided in the immediate vicinity when employees are assigned work at other casual locations where the risk of drowning exists.

(c) Work assigned over water where the vertical drop from an accidental fall would be more than 50 feet, must be subject to specific procedures as approved by the department.

Safety data sheets

WAC 296-800-180 Safety data sheets (SDSs) as exposure records.

Important:
Exposure records contain information about employees' exposure to toxic substances or harmful physical agents. Safety data sheets (SDSs) are one type of exposure record. The preservation of and access to exposure records is necessary to improve detection, treatment, and prevention of occupational diseases. This rule supplements the chemical hazard communication rule by extending access to SDSs, or their alternative, after employment and after the hazardous chemical is no longer used in the workplace.

Your responsibility: You must preserve and provide access to safety data sheets (SDSs) or their alternative as exposure records

You must meet the requirements	*in this section*
Preserve exposure records for at least thirty years	WAC 296-800-18005
Inform current employees of exposure records	WAC 296-800-18010
Provide access to exposure records	WAC 296-800-18015
Transfer records when ceasing to do business	WAC 296-800-18020

Note:

- Employee medical and exposure records, chapter 296-802 WAC, requires the preservation and access to other exposure records including records such as workplace monitoring data and biological monitoring results and medical records. If you keep these other types of employee exposure records or employee medical records, you must comply with these additional requirements.
- This rule applies to every employer who maintains, makes, contracts for, or has access to SDSs for chemicals used in their workplace.
- The specific identity of a toxic substance may be withheld from a disclosable record if it is a verifiable trade secret. For trade secret requirements see WAC 296-901-14018 Trade secrets.
.

WAC 296-800-18005 Preserve exposure records for at least thirty years.

You must keep safety data sheets (SDSs) and analysis using SDSs for at least thirty years, including current, former, and future employers receiving transferred records. Preserve SDSs in any form, as long as the information is not altered and is retrievable. You may keep alternative records instead of SDSs concerning the identity of a substance. The alternative record must also be kept for thirty years and contain the following information:

(1) Some record of the identity (chemical name, if known) of a substance or agent.

(2) Where the substance or agent was used.

(3) When the substance or agent was used.

WAC 296-800-18010 Inform current employees of exposure records.

(1) You must inform current employees who are, or will be exposed to a toxic chemical of:

Note: A chemical is toxic if:

- The latest printed edition of the National Institute for Occupational Safety and Health (NIOSH) Registry of Toxic Effects of Chemical Substances (RTECS) lists the substance. This may be obtained online, CD-ROM, or on a computer tape.
- Testing by or known to the employer has shown positive evidence that the substance is an acute or chronic health hazard.
- A safety data sheet (SDS) kept by or known to the employer shows the material may be a hazard to human health.

(a) The existence, location, and availability of SDSs or alternative records, and any other records covered by this rule.

(b) The person responsible for maintaining and providing access to records.

(c) Exposure records when the employee first enters into employment and then once a year thereafter.

(d) Existence and their rights of access to these records.

> **Note**: Informing employees of the availability of these records may be accomplished by posting, group discussion or by individual notifications.

(2) You must keep a copy of this rule and make copies available upon request to employees.

(3) You must distribute to employees any informational materials about this rule that are made available to the employer by the department.

WAC 296-800-18015 Provide access to exposure records.

(1) You must provide access, whenever requested by an employee or their designated representative, to a relevant exposure record:

(a) In a reasonable time, place, and manner.

(b) Within fifteen working days. If the employer cannot meet this requirement, they must inform the requesting party of the reason for the delay and the earliest date the record will be made available.

> **Note**:
> - Employee means any current, former or transferred worker.
> - A relevant exposure record is an SDS or its alternative, or analysis using SDSs or their alternative.

(2) You must make sure labor and industries has prompt access to any exposure records and related analysis. This must be done without violation of any rights under the Constitution or the Washington Industrial Safety and Health Act that the employer chooses to exercise.

> **Note**: Nothing in this rule is meant to prevent employees and collective bargaining agents from getting access to information beyond that is required by this rule.

(3) You must make sure that whenever an employee or designated representative requests an initial copy of an exposure record, related analysis or new information added to the record:

(a) A copy of the record is provided without cost to the employee or their representative.

(b) The facilities are made available for copying without cost to the employee or their representative.

(c) The record is loaned to the employee or their representative for a reasonable time to enable a copy to be made.

Note:	Whenever a record has been previously provided without cost to an employee or designated representative, and they request additional copies, the employer may charge reasonable, nondiscriminatory administrative costs (e.g., search and copying expenses, but no overhead expenses).

WAC 296-800-18020 Transfer records when ceasing to do business.

(1) You must transfer all safety data sheets (SDSs) as exposure records to the successor employer, who must do the following to these records:

(a) Received.

(b) Preserve.

(c) Keep unchanged.

(2) You must if there is no successor to receive and preserve the employee exposure records:

(a) Notify affected current employees of their rights of access to records at least 3 months prior to the cessation of the employer's business; and

(b) Transfer the records to the Department, if required by a specific WISHA safety and health rule.

Safety bulletin board

WAC 296-800-190 Safety bulletin board.

You must provide a safety bulletin board.

WAC 296-800-19005 Provide a safety bulletin board in your workplace.

You must install and maintain a safety bulletin board in every fixed workplace (establishment) that has eight or more employees. Make sure the safety bulletin board is large enough to post information such as the following:

(1) Safety bulletins.

(2) Safety newsletters.

(3) Safety posters.

(4) Accident statistics.

(5) Other safety educational material.

> **Note**: You may want to post your emergency phone numbers on the safety bulletin board.

JOB SAFETY AND HEALTH LAW POSTER

WAC 296-800-200 Job safety and health law poster.

You must post the job safety and health law poster, which informs your employees of their safety and health protection rights.

WAC 296-800-20005 Post and keep a job safety and health law poster in your workplace.

You must post it where it can easily be seen by employees and keep it in good condition.

Note:

- Other programs within labor and industries may require other workplace posters. These are:
  - Job safety and health protection
  - Notice to employees—If a job injury occurs
  - Your rights as a nonagricultural worker
- You can obtain a free copy of labor and industries posters from any labor and industries office or by printing it off our web site https://www.lni.wa.gov/forms-publications/required-workplace-posters. You can find the labor and industries office closest to you by:
  - Checking the resource section of this book for regional offices; or
  - Calling 1-800-4BE SAFE (1-800-423-7233).

Lighting

WAC 296-800-210 Lighting.

Your responsibility: To provide and maintain adequate lighting in your workplace.

WAC 296-800-21005 Provide and maintain adequate lighting.

> **Note**: This section establishes minimal levels of lighting for safety purposes only. Guidelines pertaining to optimal levels of lighting and illumination may be found in Practice for Industrial Lighting, ANSI/IES RP7-1979. (See the Resource Section of this book on how to contact ANSI.)

(1) You must provide and maintain adequate lighting for all work activities in your workplace. See the following table:

Lighting Table

Activity	Minimum acceptable average lighting level in an area:	Any one single measurement used to determine the average lighting level *cannot be less than:
	(Foot-candles)	(Foot-candles)
Indoor task	10	5
Outdoor task	5	2.5
Nontask activities for both indoor and outdoor	3	1.5

*Lighting levels must be measured at thirty inches above the floor/working surface at the task.

(2) You must have adequate light for employees to see nearby objects that might be potential hazards or to see to operate emergency controls or other equipment, if general lighting is not available.

> **Note**:
> - Lighting levels can be measured with a light meter.
> - Conversion information: 1 foot-candleEhard = 1 lumen incident per square foot = 10.76 lux.

Housekeeping, drainage, and storage

WAC 296-800-220 Housekeeping, drainage, and storage.

Your responsibility: To provide your employees with a clean, dry, pest-free workplace.

> **Note**: The introduction has important information about building, electrical and fire codes that may apply to you in addition to WISHA rules. See "How do the WISHA rules relate to building, fire, and electrical codes" in the introduction section of this book.

You must meet the requirements	*in this section*
Housekeeping	
Keep your workplace clean	WAC 296-800-22005
Sweep and clean your workplace to minimize dust	WAC 296-800-22010
Keep your workplace free of obstacles that interfere with cleaning	WAC 296-800-22015
Control pests in your workplace	WAC 296-800-22020
Make sure floors are maintained in a safe condition	WAC 296-800-22022
Drainage	
Keep your work floors dry, when practical	WAC 296-800-22025
Provide proper drainage	WAC 296-800-22030
Storage areas	
Store things safely	WAC 296-800-22035
Control vegetation in your storage areas	WAC 296-800-22040

Housekeeping

WAC 296-800-22005 Keep your workplace clean.

You must keep all areas of your workplace, passageways, storage rooms, and service rooms in a clean, orderly and sanitary condition to the extent the nature of the work allows.

WAC 296-800-22010 Sweep and clean your workplace to minimize dust.

(1) You must sweep and clean your workplace in a way that minimizes dust in the air as much as possible.

(2) You must, when practical, clean after hours so that your employees are not exposed to dust in the air on the job.

WAC 296-800-22015 Keep your workplace free of obstacles that interfere with cleaning.

You must keep your workplace clear of obstructions such as nails, splinters, loose boards and unnecessary holes and openings to make cleaning easier and more effective.

WAC 296-800-22020 Control pests in your workplace.

(1) You must make sure each building in your workplace is constructed, equipped and maintained so it restricts pests from entering or living in it. Pests include animals such as:

(a) Rodents (rats, mice, and squirrels).

(b) Birds (starlings, pigeons, and swallows).

(c) Insects (bees, wasps, and mosquitoes).

(2) You must take steps to effectively control pests in your workplace, if they are detected. Carry out a continuing and effective control program in the areas of your workplace where pests have been detected.

Note:

- By handling dead or live pests including their waste products, attached parasites and other contaminated materials, your employees may be exposed to certain health risks. These risks include, but are not limited to: Hanta virus, rabies, lyme disease and psittacosis. Contact your local L&I office (see Resource Section of this book) or the public health department for more information about health risks and proper pest handling and disposal techniques.
- "Workplace" includes storage areas.

WAC 296-800-22022 Make sure floors are maintained in a safe condition.

(1) You must make sure floors are kept free of debris. This includes:

(a) Buildings.

(b) Platforms.

(c) Walkways and driveways.

(d) Storage yards.

(e) Docks.

(2) You must use a nonslip coating on all polished floors.

Drainage

WAC 296-800-22025 Keep your workroom floors dry, when practical.

You must do the following to help keep your employees dry if wet processes are used in your work area:

(1) Maintain drainage away from the work area; and

(2) Provide false floors, platforms, or other dry places where employees can stand, where practical; or

(3) Provide appropriate waterproof footgear.

WAC 296-800-22030 Provide proper drainage.

You must provide all areas where employees work, such as yards, basements, or garages, with adequate drainage.

Storage areas

WAC 296-800-22035 Store things safely.

(1) You must store materials so they do not create a hazard.

(2) You must keep workplace storage areas free from accumulation of materials that could create hazards from tripping, fire, or explosion.

(3) You must secure stored items such as bundles, containers, and bags to prevent them from falling, sliding, or collapsing by doing one or more of the following:

(a) Stacking.

(b) Racking.

(c) Blocking.

(d) Interlocking.

(e) Otherwise securing them.

(4) You must make sure stored items are limited in height so that they are stable and secure to prevent sliding or collapse.

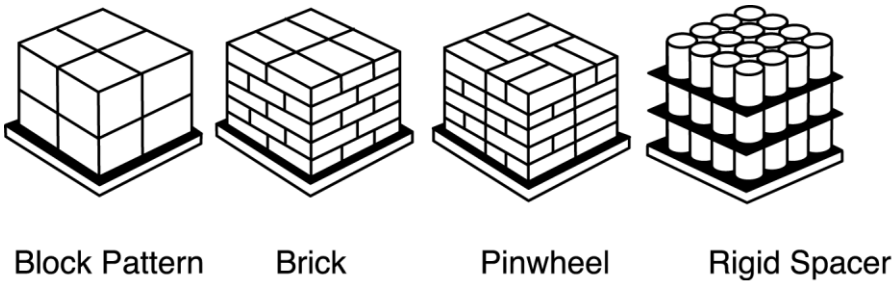

WAC 296-800-22040 Control vegetation in your storage areas.

You must control vegetation in your storage areas when necessary to create a safe working environment.

Drinking water, bathrooms, washing facilities and waste disposal.

WAC 296-800-230 Drinking water, bathrooms, washing facilities and waste disposal.

Your responsibility: You must provide safe drinking (potable) water, bathrooms, washing facilities, eating areas and garbage and waste disposal in your workplace.

General requirements for all workplaces.

You must meet the requirements	*in this section*
Drinking water	
Provide safe drinking (potable) water in your workplace	WAC 296-800-23005
Clearly mark water outlets that are not fit for drinking (nonpotable)	WAC 296-800-23010
Make sure system delivering not fit for drinking (nonpotable) water prevent backflow into drinking water systems	WAC 296-800-23015
Bathroom and washing facilities	
Provide bathrooms for your employees	WAC 296-800-23020
Provide convenient and clean washing facilities	WAC 296-800-23025
Eating areas and food service	
Make sure eating areas are safe and healthy	WAC 296-800-23040
Follow these requirements if you provide food service to your employees	WAC 296-800-23045
Garbage and waste disposal	
Dispose of garbage and waste safely	WAC 296-800-23050
Remove garbage and waste in a way that does not create a health hazard	WAC 296-800-23055

You must meet the requirements	*in this section*
Lunchrooms and personal service rooms	
Provide a separate lunchroom if employees are exposed to toxic substances if they are allowed to eat and drink on the job site	WAC 296-800-23060
Provide showers when required for employees working with chemicals	WAC 296-800-23065
Provide change rooms when required	WAC 296-800-23070
Make sure any work clothes you provide are dry	WAC 296-800-23075

Note: Some industries may have additional rules on bathrooms and washing facilities. Some examples include:

Industry	WAC
Agriculture; Indoor Sanitation and Temporary Labor Camps	Chapter 296-307 WAC
Carcinogens; General Regulated Area Requirements	WAC 296-62-07308
Charter Boats	WAC 296-115-050
Compressed Air Work	WAC 296-36-160(5)
Construction	WAC 296-155-140
Temporary Labor Camps	WAC 296-24-12507

Drinking water

WAC 296-800-23005 Provide safe drinking (potable) water in your workplace.

(1) You must provide safe drinking (potable) water for employees for:

(a) Washing themselves.

(b) Personal service rooms.

(c) Cooking.

(d) Washing premises where food is prepared or processed.

(e) Washing food, eating utensils, or clothing.

(2) You must make sure when providing movable or portable drinking water dispensers that they are:

(a) Capable of being closed.

(b) Kept in sanitary condition.

(c) Equipped with a tap.

(3) You must prohibit employees from:

(a) Using shared drinking cups or utensils.

(b) Using open containers such as barrels, pails, and tanks that require employees to dip or pour drinking water, even if the containers have covers.

Definition:

Potable water. Water that you can safely drink that meets specific safety standards prescribed by the United States Environmental Protection Agency's National Interim Primary Drinking Water Regulations, published in 40 C.F.R. Part 141, and 40 C.F.R. 147.2400.

Personal service rooms are used for activities not directly connected with a business' production or service function such as first aid, medical services, dressing, showering, bathrooms, washing and eating.

WAC 296-800-23010 Clearly mark the water outlets that are not fit for drinking (nonpotable).

(1) You must mark water outlets that are not fit for drinking (nonpotable) such as those used for industrial processes or firefighting, so they will not be used for:

(a) Drinking.

(b) Washing themselves, except in emergencies.

(c) Cooking.

(d) Washing food, eating utensils, or clothing.

(2) You must prohibit the use of nonpotable water containing substances that could create unsafe conditions such as:

(a) Concentrations of chemicals; such as lead or chlorine.

(b) Fecal coliform bacteria.

Note: As long as the nonpotable water is free of substances that could create unsafe conditions ,the water can be used for cleaning both:

- Work premises used for activities other than food preparation or processing; and
- Personal service rooms, such as bathrooms.

Reference: You may need to follow additional requirements for emergency washing facilities. See WAC 296-800-150 First aid, for more information.

Drinking water, bathrooms, etc Illustrations

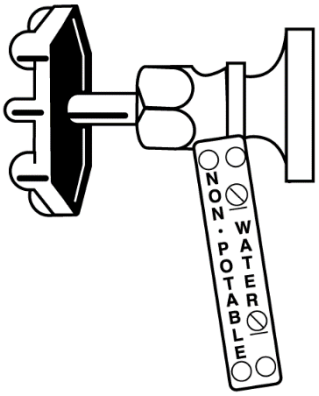

Outlets for water not fit to drink must be marked.

WAC 296-800-23015 Make sure that systems delivering not-fit-for-drinking (nonpotable) water prevent backflow into drinking water systems.

You must make sure that systems delivering not-fit-for-drinking (nonpotable) water prevent backflow into drinking water systems.

WAC 296-800-23020 Provide bathrooms for your employees.

EXEMPTION:
You do not have to provide bathrooms: For mobile crews or at work locations not normally attended by employees, if there is transportation immediately available to nearby bathrooms that meet the requirements of this section.

(1) You must provide bathrooms with the appropriate number of toilets for your employees at every workplace based on Table 1.

(2) You must have an appropriate number of toilets for each gender, based on the number of male and female employees at your workplace.

For example, if you have thirty-seven men and seventeen women, you need to have three toilets for the men and two toilets for the women, based on Table 1.

(3) You must make sure each toilet is in a separate compartment with a door and walls or partitions for privacy.

Table 1 Required Number of Employee Toilets at Every Workplace

Maximum Number of Employees Present at Any One Time During a Shift	Minimum Number of Toilets Required**
1 to 15	1
16 to 35	2
36 to 55	3
56 to 80	4
81 to 110	5
111 to 150	6
Over 150	One additional toilet for each additional 40 employees

Note: A shared bathroom (multiple toilets without (enclosures) counts as one toilet no matter how many toilets it contains. In bathrooms used only by men, urinals may be substituted for up to 1/3 of the required toilets.

(4) You must provide toilet paper and a toilet paper roll holder for each toilet.

(5) You must make sure bathrooms are maintained in a clean and sanitary condition.

(6) You must make sure the sewage disposal method does not endanger the health of employees.

EXEMPTION:

Separate bathrooms for men and women are not required if the bathroom:

- Will only be occupied by one person at a time.
- Can be locked from the inside.
- Contains at least one toilet.

WAC 296-800-23025 Provide convenient and clean washing facilities.

EXEMPTION:

You do **not** have to provide washing facilities for:

Mobile crews or work locations not normally attended by employees, if there is immediately available transportation to nearby washing facilities that meet the requirements of this rule.

You must provide convenient and clean washing facilities for employees including:

(1) Sinks or basins for personal washing.

(2) Hot and cold water, or lukewarm (tepid), running water in each sink and basin.

(3) Hand soap or similar cleaning agents.

(4) One of the following:

(a) Individual paper or cloth hand towels.

(b) Individual sections of clean continuous cloth toweling.

(c) Air blowers for drying hands, located near the sinks and basins.

Eating areas and food service

WAC 296-800-23040 Make sure eating areas are safe and healthy.

(1) You must make sure employees are not allowed to eat and drink in:

(a) Bathrooms.

(b) Areas exposed to toxic substances.

(2) You must make sure food is not stored in bathrooms or areas exposed to toxic substances.

WAC 296-800-23045 Follow these requirements if you provide food service to your employees.

(1) You must make sure all food service facilities and operations you make available follow sound hygiene principles.

(2) You must make sure the food is:

(a) Unspoiled.

(b) Protected from contamination during processing, preparation, handling, and storage.

Garbage and waste disposal

WAC 296-800-23050 Dispose of garbage and waste safely.

(1) You must make sure garbage containers are:

(a) Kept in a clean and sanitary condition.

(b) Made from smooth, corrosion resistant materials.

(c) Easily cleaned or are disposable.

(d) Equipped with a solid tight-fitting cover unless you can keep them in a sanitary condition without a cover.

(2) You must provide enough garbage containers to make sure they:

(a) Are conveniently located to encourage their use.

(b) Will not be overfilled.

WAC 296-800-23055 Remove garbage and waste in a way that does not create a health hazard.

You must remove all sweepings, solid and liquid wastes, refuse, and garbage as often as needed to keep the workplace in a sanitary condition.

WAC 296-800-23060 Provide a separate lunchroom if employees are exposed to toxic substances if they are allowed to eat and drink on the job site.

(1) You must provide a lunchroom separate from the work area if employees are exposed to toxic substances.

(2) You must use Table 2 to determine the required square footage in your lunchroom based on the number of employees using the room at any one time

Table 2 Maximum Number of Employees Using Lunchroom at One Time

Number of Persons	Square Feet per Person
25 and less	13
26-74	12
75-149	11
150 and over	10

Note: You do not have to provide a separate lunchroom if it is convenient for employees to leave the workplace to eat and drink.

WAC 296-800-23065 Provide showers when required for employees working with chemicals.

(1) You must provide showers for employees if:

(a) They work with chemicals that could cause an occupational illness; and

(b) The chemicals remain on the skin between work shifts.

(2) You must make sure employees who work with such chemicals shower at the end of their shifts.

(a) Make sure showers have:

(i) Soap or other cleansing agents.

(ii) Hot and cold water with a common discharge line.

(b) Provide individual, clean towels for each employee who is required to shower.

(c) Provide at least one shower for every ten employees (or every fraction of 10) of each gender.

Note: Table 3 shows the number of showers to provide based on a “fraction of 10.”

Table 3

Number of Employees of Each Gender	Number of Showers
1-10	1
11-20	2
21-30	3
31-40	4
41-50	5

WAC 296-800-23070 Provide change rooms when required.

(1) You must provide change rooms when employees are required by a particular standard to wear protective clothing because of the possibility of contamination with toxic materials.

(2) You must make sure change rooms have separate storage facilities for street clothes and protective clothing.

WAC 296-800-23075 Make sure any work clothes you provide are dry.

You must make sure when providing work clothes to employees that the clothing provided is dry if the clothing:

(1) Gets wet during use; or

(2) Is washed before it is reused.

Environmental tobacco smoke in the office

WAC 296-800-240 Environmental tobacco smoke in the office.

Your responsibility: You must eliminate exposure to environmental tobacco smoke in your office work environment.

You must meet the requirements	*In this section*
Prohibit tobacco smoke in your office work environment	WAC 296-800-24005

> **Note**: This rule does not preempt any federal, state, municipal, or other local authority's regulation of indoor smoking that is more protective than this section.

Definition: **Office work environment** is an indoor or enclosed occupied space where clerical work, administration, or business is carried out. In addition, it includes:

- Other workplace spaces controlled by the employer and used by office workers, such as cafeterias, meeting rooms, and washrooms.
- Office areas of manufacturing and production facilities, not including process areas.
- Office areas of businesses such as food and beverage establishments, agricultural operations, construction, commercial trade, services, etc.

Link: For work environments outside the office, contact your local health department using the link: https://www.doh.wa.gov/YouandYourFamily/Tobacco/LawRegulations or by calling them directly.

WAC 296-800-24005 Prohibit tobacco smoke in your office work environment.

EXEMPTION:
The minimum criteria specified in this rule do not apply to outdoor structures provided for smokers such as gazebos or lean-tos that maintain the twenty-five feet-distance from entrances, exits, windows that open, and ventilation intakes that serve an enclosed area where smoking is prohibited.

(1) You must prohibit smoking in your office work environment.

(2) You must use administrative controls to prevent tobacco smoke from entering your office from outside the building.

(3) You must make sure that outside smoking areas used by your employees are at least twenty-five feet from entrances, exits, windows that open, and ventilation intakes that serve an enclosed area where smoking is prohibited.

Stairs and stair railings

WAC 296-800-250 Stairs and stair railings.

Your responsibility: To make sure stairs used by employees are safe.

You must meet the requirements	*0in this section*
Provide fixed stairs where required	WAC 296-800-25005
Provide stairs that minimize hazards	WAC 296-800-25010
Provide handrails and stair railings	WAC 296-800-25015

EXEMPTION:

This rule does **not** apply to:

- Stairs used exclusively for fire exit purposes.
- Construction operations (See WAC -296-24-76503) for the specifications for the safe design and construction of fixed general industrial stairs).
- Private buildings or residences.
- Articulated stairs (for example, stairs used at a marina).
- Nonindustrial and monumental stairs are excluded as they are not industrial stairs; however, when public and private building steps are located at loading or receiving docks, in maintenance areas, etc., or are used exclusively by employees, the requirements of this rule must apply.

Note: The introduction has important information about building, electrical and fire codes that may apply to you in addition to WISHA rules. See "How do the WISHA rules relate to building, fire, and electrical codes" in the Introduction Section of this book.

WAC 296-800-25005 Provide fixed stairs where required.

(1) You must install fixed stairs where:

(a) Employees travel between different levels on a predictable and regular basis.

(b) Access to platforms is required to give routine attention to equipment under operation.

(c) Daily movement between elevations is required to gauge, inspect, and maintain equipment where those work assignments may expose employees to acids, caustics, gases, or other harmful substances.

(d) Carrying tools or equipment by hand is a normal work requirement.

(2) You must not use spiral stairways except as secondary exit routes.

> **Note**:
>
> - You can use fixed ladders for climbing elevated structures, such as tanks, towers, and overhead traveling cranes, when their use is common practice in your industry.
> - You can use winding stairways on tanks and similar round structures if the structure's diameter is at least five feet.
> - You could use a spiral stairway as an exit route in a restricted area that lacks room for a conventional stairway.

Definitions:

- A **stairway or fixed stairs** is a series of steps and landings:
  - Leading from one level or floor to another
  - Leading to platforms, pits, boiler rooms, crossovers, or around machinery, tanks, and other equipment
  - Used more or less continuously or routinely by employees or only occasionally by specific individuals
  - With three or more risers.
- A **riser** is the vertical part of the step at the back of a tread that rises to the front of the tread above.
- A **tread** is the horizontal part of the step. Tread width is the distance from the front of the tread to the back.

Stair Components

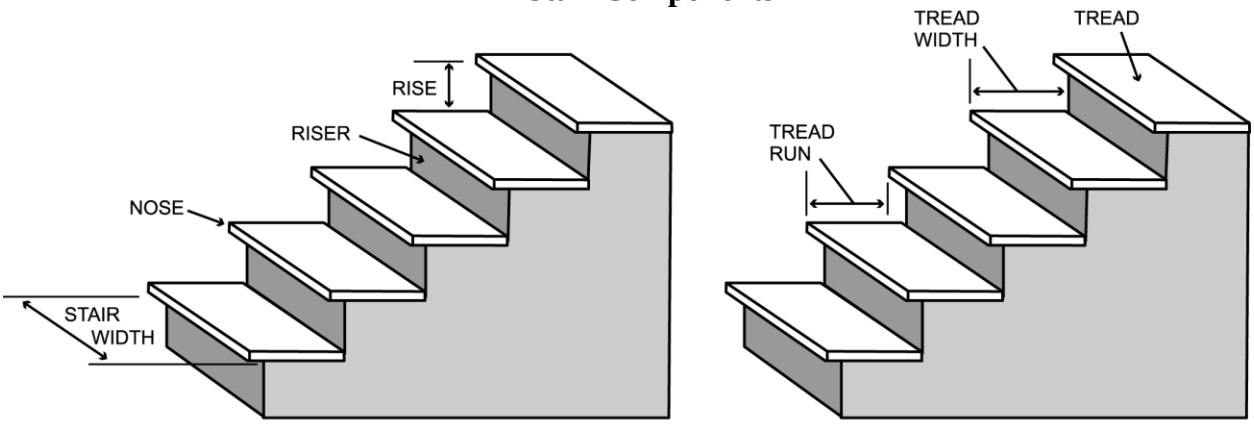

Stair railing is removed to show detail.

WAC 296-800-25010 Provide stairs that minimize hazards.

(1) You must make sure stairs have slip-resistant treads.

(2) You must make sure that stairs with four or more risers have:

(a) Railings on the open sides of all exposed stairways and stair platforms.

(b) Handrails on at least one side of closed stairways, preferably on the right side while descending.

(3) You must provide a platform where doors or gates open directly on a stairway. The swing of the door must not reduce the effective width of the platform to less than 20 inches.

> **Note**: To see all of the rules for building fixed stairs, refer to WAC 296-24-75011 and 296-24-765 of the General safety and health standard.

WAC 296-800-25015 Provide handrails and stair railings.

EXEMPTION:
Vehicle service pit stairways are exempt from the rules for stairway railing and guards, if they would prevent a vehicle from moving into a position over the pit.

Definition:

- A **handrail** is a single bar or pipe on brackets from a wall or partition to provide a continuous handhold for persons using a stair.
- A **stair railing** is a vertical barrier attached to a stairway with an open side, to prevent falls. The top surface of the stair railing is used as a handrail.

(1) You must make sure stairways less than forty-four inches wide have:

(a) At least one handrail, preferably on your right side as you go down the stairs, if both sides are enclosed; or

(b) At least one stair railing on the open side, if one side is open; or

(c) One stair railing on each side, if both sides are open.

(2) You must make sure stairways more than forty-four inches wide but less than eighty-eight inches wide have:

(a) One handrail on each enclosed side.

(b) One stair railing on each open side.

(3) You must make sure stairways at least eighty-eight inches wide have:

(a) One handrail on each enclosed side.

(b) One stair railing on each open side.

(c) One intermediate stair railing located approximately midway of the width.

(4) You must equip winding stairs with a handrail, offset to prevent walking on all portions of the treads, less than six inches wide.

Reference:	Railings must consist of a top rail, intermediate rail, and posts. To see all of the rules for building handrails and stairway railings, refer to WAC 296-24-75011 of the General Safety and Health Standard.

WORKPLACE STRUCTURAL INTEGRITY

WAC 296-800-270 Workplace structural integrity.

Your responsibility: To make sure that the buildings, floors, and other structures in your workplace are safe, well-built, and not overloaded.

You must meet the requirements	*in this section*
Not overload floors or roofs	WAC 296-800-27005
Make sure that floors are safe	WAC 296-800-27010
Make sure floors can support equipment that moves or has motion	WAC 296-800-27015
Provide approved load limits (weight limits) for floors	WAC 296-800-27020

Note: The introduction has important information about fire, building and electrical codes that may apply to you in addition to WISHA rules. See "How do the WISHA rules relate to fire, building and electrical codes" in the introduction section of this book.

WAC 296-800-27005 Do not overload floors or roofs.

You must prohibit overloading roofs and floors of any building or other structure with more weight than is approved by the building official.

WAC 296-800-27010 Make sure that floors are safe.

(1) You must make sure that floors including their parts and structural members are safe.

(2) You must make sure floors are of substantial construction and kept in good repair. This includes floors of:

- (a) Buildings.
- (b) Platforms.
- (c) Walks and driveways.
- (d) Storage yards.
- (e) Docks.

(3) You must make sure that structures are designed, constructed, and maintained to provide a safety factor of four times the imposed maximum strain.

(4) If you notice bowing, cracking, or other indications of excessive strain on a structure, you must take action to make sure it is safe.

> **Note**: This rule applies to all buildings that were built or those that have had complete or major changes or repairs done after 5/7/74.

WAC 296-800-27015 Make sure floors can support equipment that moves or has motion.

You must make sure flooring of buildings, ramps, docks, trestles and other fixed structures that supports equipment that moves or has motion such as vibration, must not be less than two and one-half inch material.

> **Note**: Where flooring is covered by steel floor plates, two-inch material may be used.

WAC 296-800-27020 Post approved load limits (weight limits) for floors.

(1) You must post approved load limits (weight limits) for floors used for mercantile, business, industrial or storage purposes in an obvious place.

(2) You must as the owner, or owner's agent, of a building (or other part of a workplace) post the load approved by the building official by:

- (a) Supplying and affixing a durable metal sign that is marked with the approved load.
- (b) Placing the metal sign in an obvious spot in the space to which it applies.
- (c) Replacing the metal sign if it is lost, defaced, damaged, or removed.

> **Note**: This rule applies to the floor that supports shelving, but not to the shelves themselves.

Basic electrical rules

WAC 296-800-280 Basic electrical rules.

Your responsibility: To protect your employees from hazards when working with electrical equipment, tools, and appliances.

You must meet the requirements	*in this section*
Inspect all electrical equipment your employees use to make sure the equipment is safe	WAC 296-800-28005
Make sure all electrical equipment is used for its approved or listed purpose	WAC 296-800-28010
Make sure electrical equipment used or located in wet or damp locations is designed for such use	WAC 296-800-28015
Make sure electrical equipment that is not marked is not used	WAC 296-800-28020
Identify disconnecting means	WAC 296-800-28022
Maintain electrical fittings, boxes, cabinets, and outlets in good condition	WAC 296-800-28025
Working space around electrical equipment	WAC 296-800-28027
Maintain all flexible cords and cables in good condition and use safely	WAC 296-800-28030
Guard electrical equipment to prevent your employees from electrical hazards	WAC 296-800-28035
Make sure electrical equipment is effectively grounded	WAC 296-800-28040
Make sure electrical equipment has overcurrent protection	WAC 296-800-28045

EXEMPTIONS:

- These rules apply to all electrical equipment used in the workplace, except for:
  - Electrical installations and equipment on ships, watercraft, railway, rolling stock, aircraft and all automotive vehicles other than mobile homes and recreational vehicles.
  - Electrical installations and equipment used to generate, transmit, transform or distribute power exclusively for operation of rolling stock.
  - Electrical installations of railways used exclusively for signaling and communication purposes.
  - Installations underground in mines.
  - Installations of communication equipment under the exclusive control of communications utilities, located outdoors or in building spaces used exclusively for such installations.
  - Installations controlled and used exclusively by electric utilities for:
    - Communication or metering purposes; or
    - Generating, controlling, transforming, transmitting and distributing electric energy that are located:
      - In buildings used exclusively by the utility for such purposes; or
      - Outdoors on property owned or leased by the utility; or
      - On public highways, streets and roads; or
      - Outdoors by established rights on private property.

Note:

- The introduction has important information about fire, building and electrical codes that may apply to you in addition to WISHA rules. See "How do the WISHA rules relate to fire, building and electrical codes" in the introduction section of this book.
- These rules guide how electrical equipment is used and maintained in your workplace. They should not be used in place of your local electrical codes if you are installing electrical wiring, electrical circuits or electrical distribution equipment.
- This rule applies to 600 volts or less. Requirements for specific equipment or special installation are found in chapter 296-24 WAC, Part L.

WAC 296-800-28005 Inspect all electrical equipment your employees use to make sure the equipment is safe.

You must inspect electrical equipment to make sure there are no recognized hazards likely to cause death or serious physical harm to employees. Determine the safety of the equipment by considering the following:

Suitability for installation and use as evidenced by:

(1) Approved or listed by a recognized testing laboratory, such as Underwriters Laboratories (UL) or other approving agency.

(2) Labeled or listed for the purpose it is being used.

(3) Mechanical strength and durability, including the adequacy of the protection provided by parts designed to enclose and protect other equipment.

(4) Wire-bending and connection space.

(5) Electrical insulation.

(6) Heating effects under all conditions of use.

(7) Arcing effects.

(8) Classification by type, size, voltage, current capacity, and specific use.

(9) Other factors that contribute to the practical safeguarding of persons using or likely to come in contact with the equipment.

WAC 296-800-28010 Make sure all electrical equipment is used for its approved or listed purpose.

Definitions:

- Electrical outlets are places on an electric circuit where power is supplied to equipment through receptacles, sockets and outlets for attachment plugs.
- Receptacles are outlets that accept a plug to supply electric power to equipment through a cord or cable.

(1) You must make sure electrical outlets have an ampere rating that is not less than the electrical load to be served.

(2) You must make sure the proper mating configuration exists when connecting the attachment plug to a receptacle.

(3) You must make sure electrical outlets, cord connectors, attachment plugs and receptacles will not accept an attachment plug with a different voltage or current rating than that for which the device is intended.

> **Note**: A 20-ampere T-slot receptacle or cord connector may accept a 15-ampere attachment plug of the same voltage rating.

SOME COMMON ELECTRICAL OUTLET (RECEPTACLE) CONFIGURATIONS

	15 Ampere	20 Ampere	30 Ampere	50 Ampere
Two Pole 3 - Wire Grounding 125 Volt		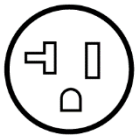	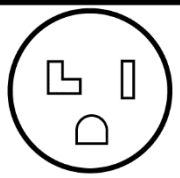	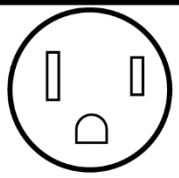
Three Pole 3 - Wire 125/250 Volt				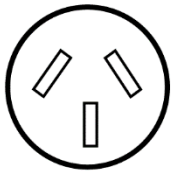

Note: A 20-ampere "T-solt" outlet or cord connector may accept a 15-ampere attachment plug of the same voltage rating.

WAC 296-800-28015 Make sure electrical equipment used or located in wet or damp locations is designed for such use.

(1) You must make sure fixtures and receptacles located in wet or damp locations are approved for such use. They must be constructed or installed so that water cannot enter or accumulate in wireways, lampholders, or other electrical parts.

(2) You must make sure cabinets, cutout boxes, fittings, boxes, and panelboard enclosures in damp or wet locations are:

(a) Installed to prevent moisture or water from entering and accumulating inside.

(b) Mounted so there is at least a 1/4 inch airspace between the enclosure and the wall or other supporting surface. Nonmetallic enclosures may be installed on a concrete, masonry, tile, or similar surface without the airspace.

(c) Weatherproof when used in wet locations.

Switches, circuit breakers, and switchboards located in wet locations must be in weatherproof enclosures.

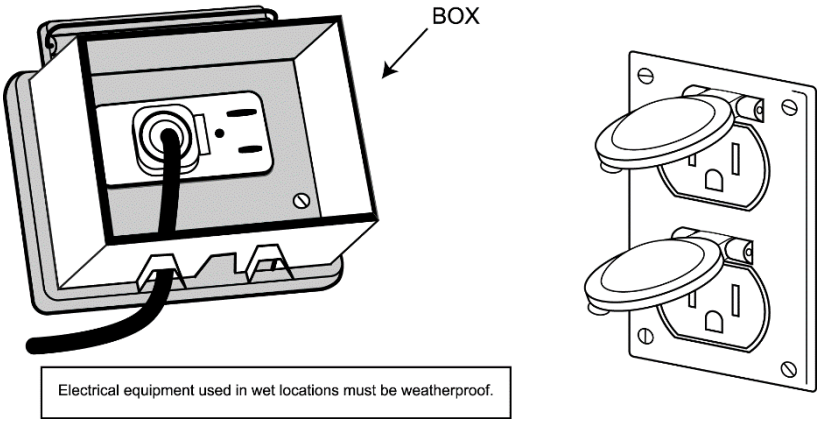

WAC 296-800-28020 Make sure electrical equipment that is not marked is not used.

(1) Electric equipment may not be used unless the following markings have been placed on the equipment:

(a) The manufacturer's name, trademark, or other descriptive marking by which the organization responsible for the product may be identified; and

(b) Voltage, current and wattage, or other ratings as necessary.

(2) You must make sure markings are durable and appropriate to the environment.

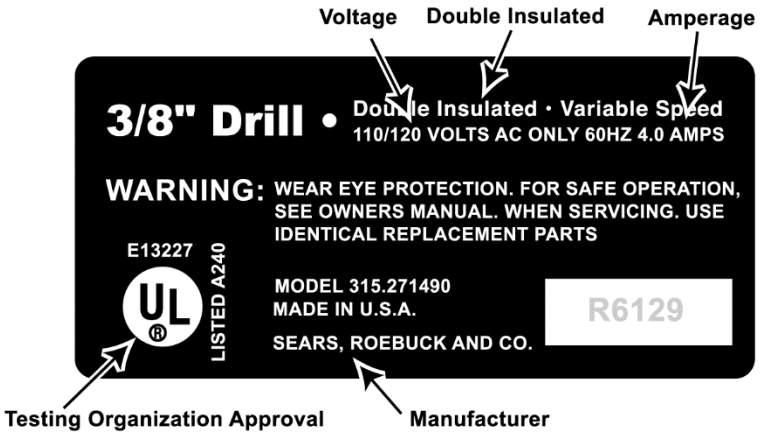

Electrical tools and equipment marked to show manufacturer, approvals and power requirements.

WAC 296-800-28022 Identify disconnecting means.

(1) You must make sure the disconnecting means (such as on/off switches and circuit breakers) is marked to show when it is open and closed and what equipment it controls, unless located and arranged so the purpose is obvious.

(2) You must install the disconnecting means at a readily accessible location nearest the point of entrance of the service-entrance conductors.

(3) You must make sure the disconnecting means for each motor and appliance is marked, at the disconnecting means or overcurrent device, to show when the circuit is open and closed and what circuit it controls, unless located and arranged so the purpose is obvious.

(4) You must make sure each service, feeder and branch circuit is marked, at its disconnecting means or overcurrent device, to show when the circuit is open and closed and what circuit it controls, unless located and arranged so the purpose is obvious.

(5) You must make sure markings are durable and appropriate to the environment.

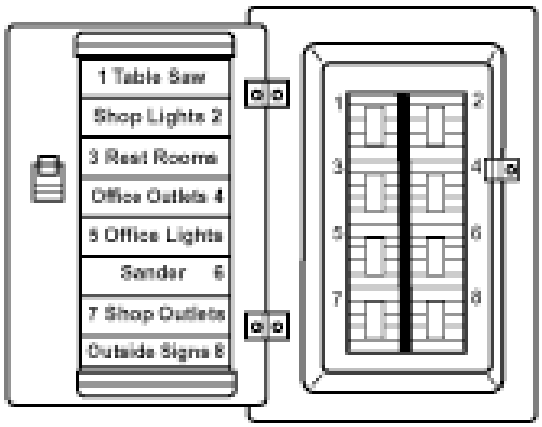

Electrical panel circuit breakers labeled to show the equipment or circuits they control.

WAC 296-800-28025 Maintain electrical fittings, boxes, cabinets and outlets in good condition.

You must do the following when using covers and openings:

(1) When conductors enter boxes, cabinets, or fittings:

- (a) Protect the conductor (wires) from abrasion.
- (b) Effectively close the openings where conductors enter.
- (c) Effectively close all unused openings.

(2) Provide pull boxes, junction boxes, and fittings with covers approved for the purpose.

(3) Make sure each outlet box has a cover, faceplate, or fixture canopy in completed installations.

(4) Make sure covers for outlet boxes with openings for flexible cord pendants have bushings to protect the cord, or have a smooth and well-rounded surface where the cord touches the opening.

(5) Ground metal covers.

WAC 296-800-28027 Working space around electrical equipment.

This section applies to equipment that operates at 600 volts or less.

(1) You must provide and maintain sufficient access and working space around all electrical equipment to permit ready and safe operation and maintenance of the equipment.

(2) You must make sure equipment likely to require examination, adjustment, servicing, or maintenance while energized has:

(a) Working space in front of the equipment that is equal to the width of the equipment or thirty inches, whichever is greater.

(b) Sufficient working space to permit equipment doors or hinged panels to open at least 90 degrees.

(c) Working space in the direction of access to live parts that is not less than that listed in Table XX. Distances are measured from the live parts if they are exposed or from the enclosure front or opening if they are enclosed.

(d) Clear working space about service equipment, switchboards, panelboards, or motor control centers that extends from the grade, floor, or platform to a height of:

(i) 6.25 Feet for installations built before August 13, 2007.

(ii) 6.5 Feet for installations built on or after August 13, 2007. If the height of the equipment is greater than 6.5 feet, the minimum headroom may not be less than the height of the equipment.

Note: Other equipment associated with the electrical installation and located above or below the electric equipment may extend not more than 6 inches beyond the front of the electric equipment.

(3) You must make sure working space is:

(a) Not used for storage.

(b) Suitably guarded when normally enclosed live parts are exposed for inspection or servicing in a passageway or general open space.

(4) You must provide at least one entrance of sufficient area to give access to the working space about electric equipment.

(5) You must provide adequate lighting (WAC 296-800-210) for all working spaces about service equipment, switchboards, panelboards, and motor control centers installed indoors. In electric equipment rooms, the illumination must not be controlled by automatic means only.

This table shows the area you must keep clear depending on the layout of the electrical equipment.

Table XX

Conditions[2]	Minimum Clear Distance[3]	Minimum Clear Distance[3]
	0 – 150 volts to ground	151 – 600 volts to ground
A[1]	3 ft.	3 ft.
B	3ft.[1]	3 1/2 ft.
C	3 ft.	4 ft.

[1] Minimum clear distances may be 0.7 m (2.5 ft.) for installations built before April 16, 1981.

[2] Conditions A, B, and C are as follows:

A .= Exposed live parts on one side and no live or grounded parts on the other side of the working space, or exposed live parts on both sides effectively guarded by suitable wood or other insulating material. Insulated wire or insulated bus bars operating at not over 300 volts are not considered live parts.

B .= Exposed live parts on one side and grounded parts on the other side.

C .= Exposed live parts on both sides of the workspace (not guarded as provided in condition A with the operator between the panels).

[3] Working space is not required in back of assemblies such as dead-front switchboards or motor control centers where there are no renewable or adjustable parts (such as fuses or switches) on the back and where all connections are accessible from locations other than the back. Where rear access is required to work on deenergized parts on the back of enclosed equipment, a minimum working space of 30 in. horizontally must be provided.

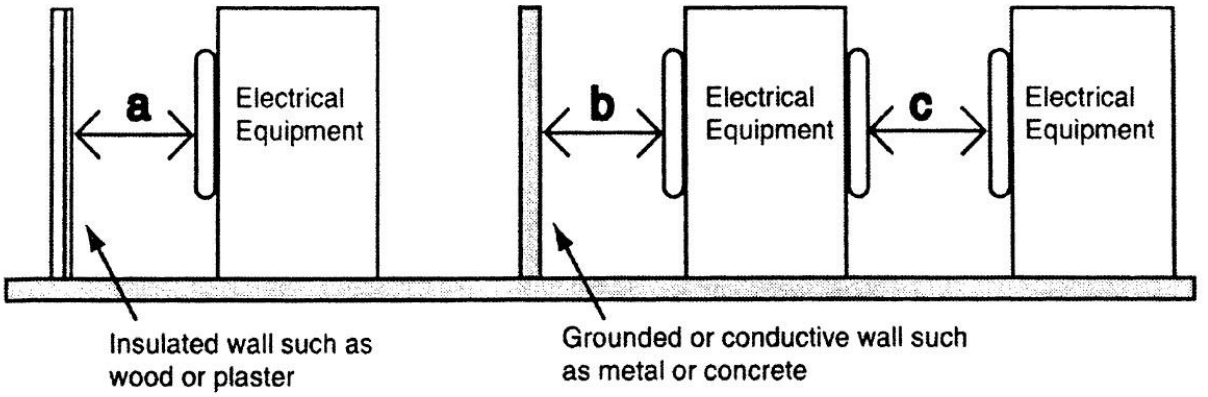

Distances are measured from live parts if they are exposed or from the enclosure front if live parts are enclosed.

WAC 296-800-28030 Maintain all flexible cords and cables in good condition and use safely.

EXEMPTION:
These rules do not apply to cords and cables that are an internal part of factory assembled appliances and equipment, like the windings on motors or wiring inside electrical panels.

Note: Flexible cords and cables are typically used to connect electrical equipment to a power source. These cords can have an electrical plug to connect to a power source or can be permanently wired into the power source. The terms flexible cords, extension cord, cables and electrical cords all refer to a type of flexible cord.

(1) You must perform visual inspections.

On portable cord- and plug-connected equipment and extension cords before use on each work shift. Defects and damage to look for include:

(a) Loose parts.

(b) Deformed or missing pins.

(c) External defects and damage.

(d) Damage to the outer covering or insulation.

(e) Pinched or crushed covering or insulation that might indicate internal damage.

EXEMPTION:

You do not need to visually inspect portable cord-and plug connected equipment and extension cords that stay connected once in place and are not exposed to damage until they are moved.

(2) You must remove from service any defective or damaged cord until repaired and tested.

(3) You must use flexible cords only as follows:

(a) Wiring of equipment and appliances.

(b) Data processing cables approved as a part of the data processing system.

(c) Pendants.

(d) Wiring for fixtures.

(e) Connecting portable lamps or appliances to an approved outlet with an attachment plug.

(f) Connecting stationary equipment that is frequently changed with an attachment plug energized from an approved outlet.

(g) Preventing noise or vibration transmission.

(h) Appliances where the fastening means and mechanical connections are designed to permit removal for maintenance and repair if the appliance is equipped with an attachment plug energized from an approved outlet.

(i) Elevator cables.

(j) Wiring of cranes and hoists.

(k) Portable and mobile signs.

(l) Connection of moving parts.

Common Acceptable Uses of Flexible Cords

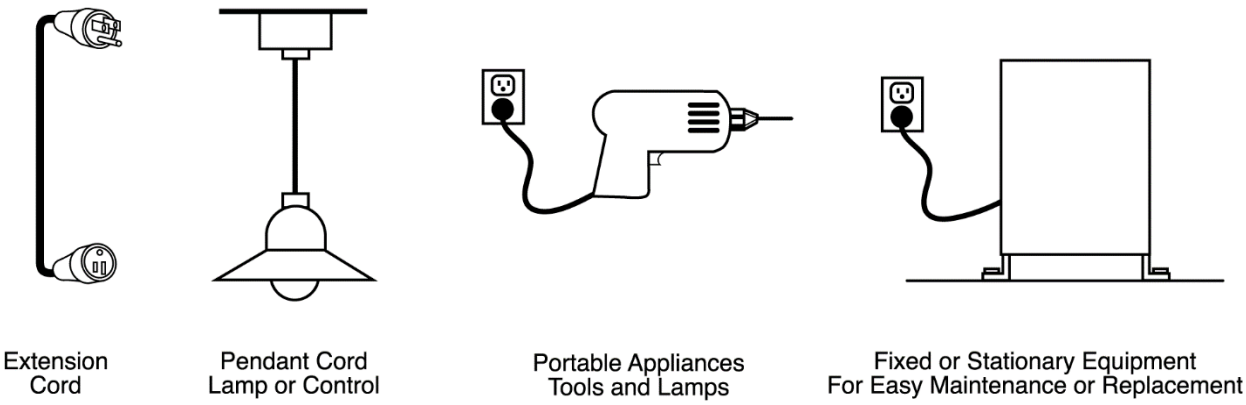

> **Note**: Extension cords (flexible cord sets) may be used on a temporary basis if you follow the rules described in the temporary use section, WAC 296-800-28030(3).

(4) You must make sure flexible cords are not:

- (a) Used as a substitute for fixed wiring of a structure.
- (b) Run through holes in walls, ceilings, or floors.
- (c) Run through doorways, windows, or similar openings.
- (d) Attached to building surfaces.
- (e) Concealed behind building walls, ceilings, or floors.
- (f) Used to raise or lower equipment.

(5) You must make sure flexible cords and cables are approved and suitable for:

- (a) The way they will be used.
- (b) The location where they will be used.

(6) You must not fasten or hang cords and equipment in any way that could cause damage to the outer jacket or insulation of the cord.

(7) You must make sure insulation on flexible cords and cables is intact.

(8) You must make sure flexible cords and electrical cords are:

- (a) Connected to devices and fittings so that any pulling force on the cord is prevented from being directly transmitted to joints or terminal screws on the plug.
- (b) Used only in continuous lengths without splice or tap.

> **Note**: Hard service flexible cords No. 12 or larger may be repaired or spliced if the insulation, outer sheath properties, and use characteristics of the cord are retained.

(9) You must prohibit your employees from using wet hands to plug or unplug equipment or extension cords if the equipment is energized.

(10) You must provide the following for temporary use.

(a) Make sure temporary electrical power and lighting installations that operate at 600 volts or less are used only:

(i) During and for remodeling, maintenance, repair or demolition of buildings, structures, or equipment, and similar activities.

(ii) For experimental or developmental work.

(iii) During emergencies.

(iv) For no more than ninety days for:

(A) Christmas decorative lighting.

(B) Carnivals.

(C) Other similar purposes.

(b) Make sure flexible cords and cables are protected from accidental damage, as might be caused, for example, by sharp corners, projections, and doorways or other pinch points.

(c) Remove temporary wiring immediately upon completion of the project or purpose for which the wiring was installed.

WAC 296-800-28035 Guard electrical equipment to prevent your employees from electrical hazards.

(1) You must guard live parts of electric equipment operating at 50 volts or more against accidental contact by any of the following means:

(a) By approved cabinets or other forms of approved enclosures.

(b) By location in a room, vault, or similar enclosure that is accessible only to employees qualified to work on the equipment. Entrances to rooms and other guarded locations containing exposed live parts must be marked with conspicuous warning signs forbidding unqualified persons to enter.

(c) By permanent, substantial partitions or screens so that only employees qualified to work on the equipment will have access within reach of the live parts. Any openings must prevent accidental contact with live parts by employees or objects employees carry.

(d) By location on a balcony, gallery, or platform that will exclude unqualified persons.

(e) By being located eight feet or more above the floor or other working surface.

(2) You must make sure all electrical appliances, fixtures, lampholders, lamps, rosettes, and receptacles do not have live parts normally exposed to employee contact. Rosettes and cleat type lampholders at least 8 feet above the ground may have exposed parts.

(3) In locations where electric equipment would be exposed to physical damage, enclosures or guards must be so arranged and of such strength as to prevent such damage.

Live Parts Guarded by Distance

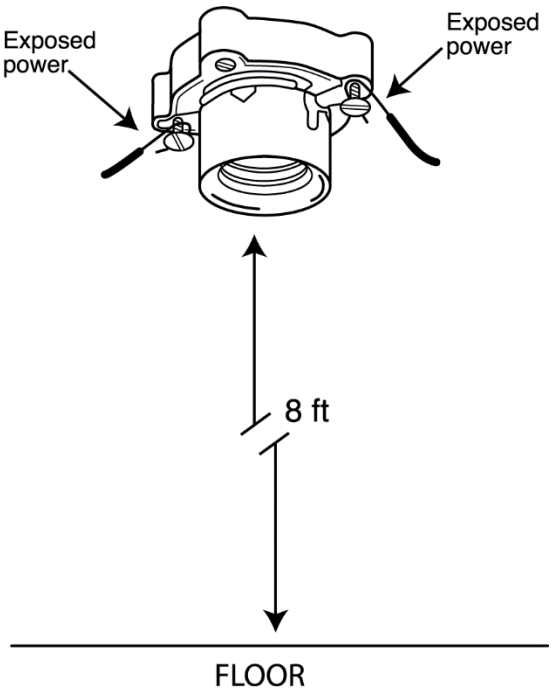

(4) You must mark entrances to rooms and other guarded locations containing exposed live parts with conspicuous warning signs forbidding unqualified persons to enter.

WAC 296-800-28040 Make sure electrical equipment is effectively grounded.

(1) You must make sure the path to ground from circuits, equipment, and enclosures is permanent, continuous, and effective.

(2) You must make sure exposed noncurrent-carrying metal parts of cord- and plug-connected equipment that may become energized are grounded under any of the following conditions:

(a) If operated at over 150 volts to ground, except for guarded motors and metal frames of electrically heated appliances if the appliance frames are permanently and effectively insulated from ground.

(b) Equipment in hazardous locations. (WAC 296-24-95613)

(c) If the equipment is of the following types:

(i) Hand-held motor-operated tools.

(ii) Stationary and fixed motor-operated tools.

(iii) Light industrial motor-operated tools.

(iv) Refrigerators.

(v) Freezers.

(vi) Air conditioners.

(vii) Clothes washers and dryers.

(viii) Dishwashers.

(ix) Electrical aquarium equipment.

(x) Sump pumps.

(xi) Hedge clippers.

(xii) Electric lawn mowers.

(xiii) Electric snow blowers.

(xiv) Wet scrubbers.

(xv) Tools likely to be used in damp or wet locations.

(xvi) Appliances used by employees standing on the ground, on metal floors or working inside of metal tanks or boilers.

(xvii) Portable hand lamps.

(xviii) Portable and mobile X-ray and associated equipment.

(xix) Tools likely to be used in wet and conductive locations.

Note: Grounding can be achieved by using tools and appliances equipped with an equipment grounding conductor (3-prong plug and grounded electrical system).

Grounded Plug	Double Insulated
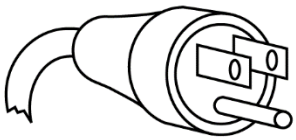	**Double Insulated**
Hand held tools and some other types of equipment must use a 3-wire plug or the tool label must show the tool as insulated by words or symbol.	

(3) You must make sure exposed metal parts of fixed equipment that do not conduct electricity, but may become energized, are grounded under any of the following conditions:

(a) If the equipment is in a wet or damp location and is not isolated.

(b) If within 8 feet vertically or 5 feet horizontally of ground or grounded metal objects and subject to employee contact.

(c) If in electrical contact with metal.

(d) If in a hazardous (classified) location.

(e) If supplied by a metal-clad, metal-sheathed, or grounded metal raceway wiring method.

(f) If equipment operates with any terminal at over 150 volts to ground.

(4) You must make sure a conductor used as a grounded conductor is identifiable and distinguishable from all other conductors.

(5) You must make sure a conductor used as an equipment grounding conductor is identifiable and distinguishable from all other conductors.

(6) You must make sure grounded conductors are not attached to any terminal or lead so as to reverse polarity of the electrical outlet or receptacle. See illustration – Examples of wiring.

(7) You must make sure grounding terminals or grounding-type devices on receptacles, cords, connectors, or attachments plugs are not used for purposes other than grounding.

Examples of wiring

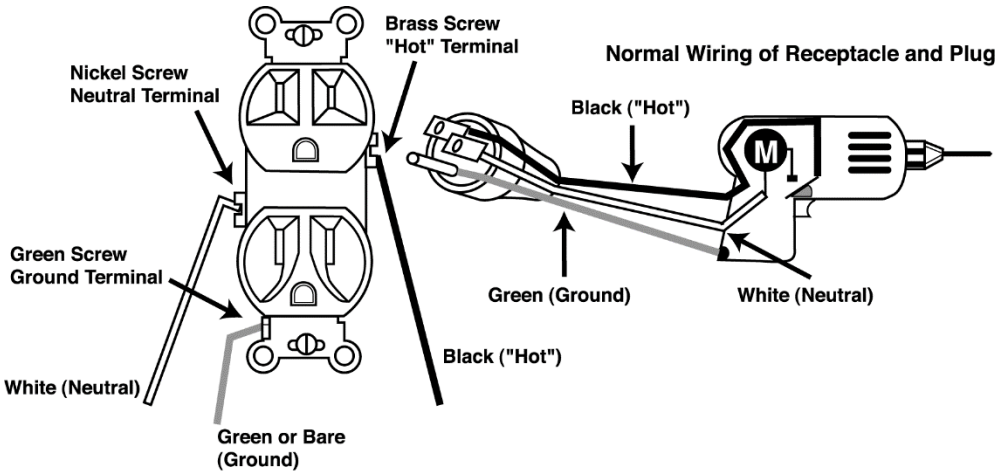

Correct wiring

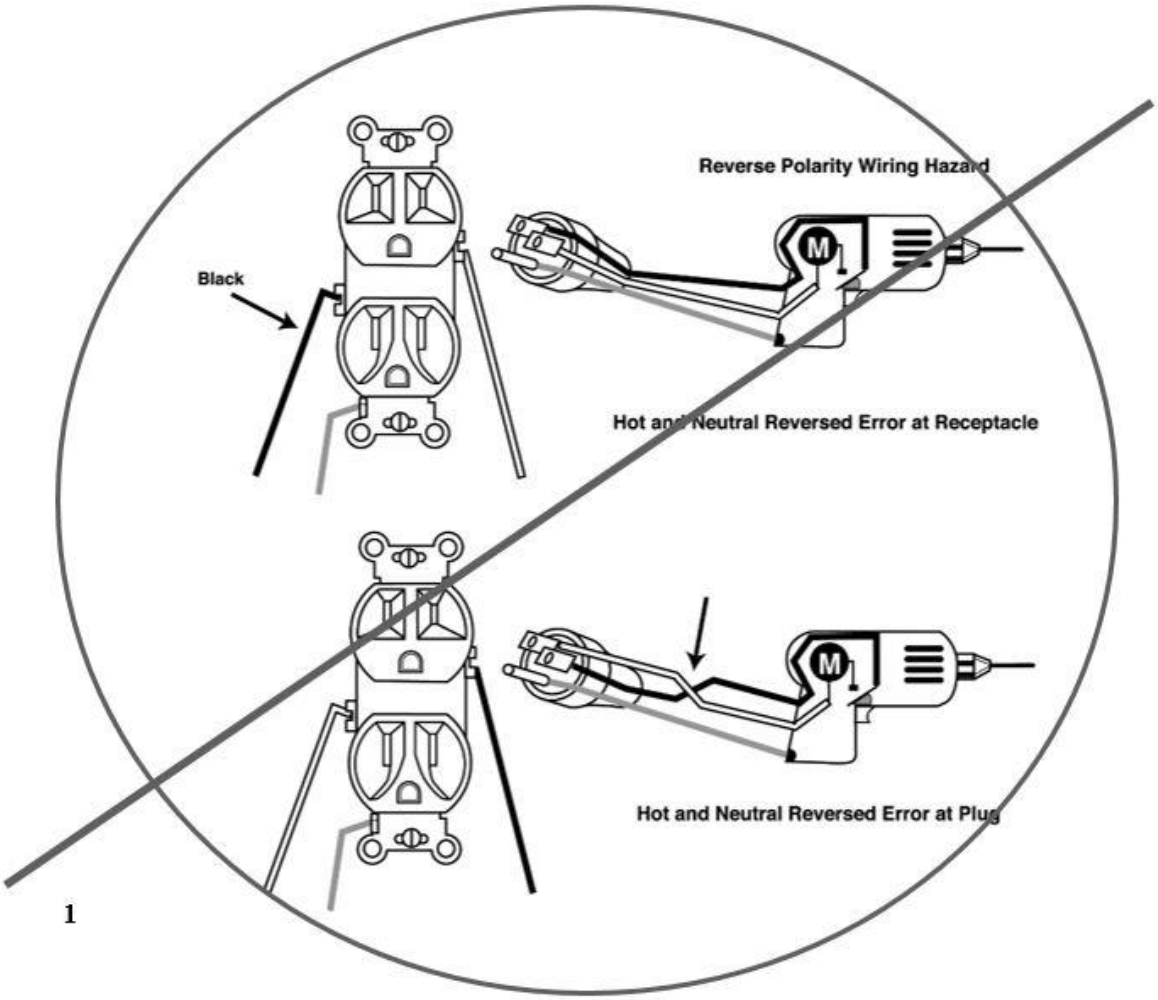

Incorrect wiring

WAC 296-800-28045 Make sure electrical equipment has overcurrent protection.

(1) You must make sure all electrical circuits that are rated at 600 volts or less have overcurrent protection.

(2) You must protect conductors and equipment from overcurrent according to their ability to safely conduct electrical current.

(3) You must make sure overcurrent devices do not interrupt the continuity of grounded conductors unless all conductors are opened at the same time, except for motor running overload protection.

(a) Locate or shield fuses and circuit breakers so that employees will not be burned or otherwise injured by their operation.

(b) Make sure handles or levers of circuit breakers, and similar parts that may move suddenly in such a way that persons in the vicinity are likely to be injured by being struck by them, are guarded or isolated.

(4) You must make sure the following fuses and thermo cutouts have disconnecting means:

(a) All cartridge fuses accessible to nonqualified persons.

(b) All fuses in circuits over 150 volts to ground.

(c) All thermal cutouts on circuits over 150 volts to ground.

(5) The disconnecting means must be installed so you can disconnect the fuses or thermal cutouts without disrupting service to equipment and circuits unrelated to those protected by the overcurrent device.

(6) You must provide easy access to overcurrent devices for each employee or authorized building management personnel.

(7) You must locate overcurrent devices:

(a) Away from easily ignitable material.

(b) Where they are not exposed to physical damage.

(8) You must make sure circuit breakers clearly indicate whether they are open (off) or closed (on).

(9) You must install circuit breakers that operate vertically so the handle is in the “up” position when the breaker is closed (on). Circuit breakers used as switches in 120-volt, fluorescent lighting circuits must be approved for that purpose and marked “SWD.”

Portable fire extinguishers

WAC 296-800-300 Portable fire extinguishers.

Important:
The following WISHA rule applies to the placement, use, maintenance, and testing of portable fire extinguishers provided for the use of employees. Your local fire marshal also enforces fire codes which address fire safety that are more comprehensive and may go beyond WISHA rules.

Your responsibility: To provide readily accessible, appropriate portable fire extinguishers for employees in your workplace.

You must meet the requirements	*in this section*
Provide portable fire extinguishers in your workplace	WAC 296-800-30005
Select and distribute portable fire extinguishers in your workplace	WAC 296-800-30010
Make sure that portable fire extinguishers are kept fully charged, in good operating condition, and left in their designated places	WAC 296-800-30015
Inspect and test all portable fire extinguishers	WAC 296-800-30020
Train your employees to use portable fire extinguishers	WAC 296-800-30025

EXEMPTIONS:

- You are exempt from the requirements of portable fire extinguishers if you have the following:
  - A written fire safety policy that requires the immediate and total evacuation of employees from the workplace when there is a fire alarm signal; and
  - An emergency action plan and a fire prevention plan which meet the requirements of WAC 296-24-567; and
  - Portable fire extinguishers in your workplace that are not accessible for employee use.
- If another WISHA rule requires portable fire extinguishers, then you must comply with these requirements.
- Where extinguishers are provided but are not intended for employee use and you have an emergency action plan and a fire prevention plan (which meet the requirements of WAC 296-24-567), then only the requirements of WAC 296-800-30020 apply.

Note: The introduction has important information about building, electrical and fire codes that may apply to you in addition to WISHA rules. See "How do the WISHA rules relate to building, fire and electrical codes" in the Introduction Section of this book.

WAC 296-800-30005 Provide portable fire extinguishers in your workplace.

(1) You must provide approved portable fire extinguishers for your workplace and distribute them so they are readily accessible. Make sure that your portable fire extinguisher does not use extinguishing agents such as carbon tetrachloride or chlorobromomethane extinguishing agents. In addition, soda-acid foam, loaded stream, antifreeze and water extinguishers of the inverting type must not be recharged or placed into service.

(2) You must mount, locate, and identify portable fire extinguishers so employees can easily reach them, without being subjected to possible injury.

WAC 296-800-30010 Select and distribute portable fire extinguishers in your workplace.

EXEMPTION:
This does not apply to the portable fire extinguishers provided for employees to use outside of workplace buildings or structures. • You are exempt from the distribution requirements of this rule if you have an emergency action plan (that meets requirements of WAC 296-24-567): – Which designates certain employees to be the only employees authorized to use the available portable fire extinguishers; and – Requires all other employees in the fire area to immediately evacuate the affected work area upon the sounding of the fire alarm.

You must provide the correct type of portable fire extinguishers and distribute them in your workplace, depending on the type, size, and severity of fire that could occur.

The type of portable fire extinguishers you ***must*** have in your workplace depends on the types of fire hazards that exist in your workplace.

Fire Extinguisher Distance Table

Type of fire hazard	Maximum distance from the fire hazard to a fire extinguisher
Wood, cloth, paper, rubber (Class A Fire Hazards)	No more than 75 feet (22.9 m). Note: You may use uniformly spaced standpipe systems or hose stations instead of Class A portable fire extinguishers, if they meet the requirements of WAC 296-24-602 or 296-24-607
Liquids, grease, gases (Class B Fire Hazards)	No more than 50 feet (15.2 m). Note: You may choose to use a smaller fire extinguisher in lieu of that required for the 50 foot distance. If you choose to have the smaller fire extinguisher, the travel distance must not be greater than 30 feet. See UFC Standard 10 Chapter 3 for the basic minimum extinguisher rating allowed.
Live electrical equipment and circuits (Class C Fire Hazards)	Distribute any Class C portable fire extinguishers using the same pattern that you have for any Class A or Class B fire hazards. Note: If the electrical equipment is de-energized, you may use a Class A or Class B portable fire extinguisher.
Powder, flakes, and residue from combustible metals, like magnesium and titanium, that build up over a 2-week period. (Class D Fire Hazards)	Not more than 75 feet (22.9 m)

WAC 296-800-30015 Make sure that portable fire extinguishers are kept fully charged, in operable condition, and left in their designated places.

You must make sure that fire extinguishers found with deficiencies are removed from service and replaced with a suitable fire extinguisher.

WAC 296-800-30020 Inspect and test all portable fire extinguishers.

(1) You must perform inspections:

Make sure that portable fire extinguishers or hose systems (used instead of fire extinguishers) are visually inspected monthly.

(2) You must perform maintenance checks:

(a) Make sure that all portable fire extinguishers are subjected to an annual maintenance check.

(b) Keep records of all annual maintenance checks and make available to the department upon request.

(i) For 1 year after the last maintenance check; or

(ii) For the life of the shell, whichever is less.

(c) Make sure that equal protection is provided when portable fire extinguishers are removed from service for maintenance and recharging.

EXEMPTION:
Most stored pressure extinguishers do not require an internal examination. Examples of those that do require an internal examination are those containing a loaded stream agent.

(3) You must perform hydrostatic testing:

EXEMPTION:
• Dry chemical extinguishers that have nonrefillable disposable containers are exempt from this requirement. • Manually pressurized pumptanks are exempt from this requirement.

(4) You must make sure that portable extinguishers are hydrostatically tested:

(a) At the intervals listed in Table 1, of this section.

(b) Whenever they show evidence of corrosion or mechanical injury.

(5) You must not perform hydrostatic testing on fire extinguishers if:

(a) The unit has been repaired by soldering, welding, brazing, or use of patching compounds.

(b) The cylinder or shell threads are damaged.

(c) Corrosion has caused pitting, including corrosion under removable name plate assemblies.

(d) The extinguisher has been burned in a fire.

(e) Calcium chloride extinguishing agents have been used in a stainless steel shell.

Note: Specific rules regarding conducting hydrostatic tests are covered in WAC 296-24-59212.

(6) You must maintain records showing that hydrostatic testing has been performed. Provide the following evidence to the department upon request:

(a) Date of test.

(b) Test pressure used.

(c) The serial number, or other identifier of the fire extinguisher that was tested.

(d) Person or agency performing the test.

(7) You must keep records until:

(a) The extinguisher is retested; or

(b) The extinguisher is taken out of service, whichever comes first.

(8) You must empty and maintain stored-pressure dry chemical extinguishers requiring a 12-year hydrostatic test, every 6 years. When recharging or hydrostatic testing is performed, the 6-year requirement begins from that date.

Hydrostatic Test Table

Type of Extinguisher	Test Interval (Years)
Stored pressure water and/or antifreeze	5
Wetting agent	5
Foam (stainless steel shell)	5
Aqueous film forming (AFFF)	5
Loaded stream	**5**
Dry chemical with stainless steel	5
Carbon dioxide	5
Dry chemical, stored pressure, with mild steel, brazed brass or aluminum shells	12
Halon 1211	12
Halon 1301	12
Dry powder, cartridge or cylinder operated, with mild steel shell	12

Note: Due to a manufacturers recall, stored pressure water extinguishers with a fiberglass shell (pre-1976) are prohibited from hydrostatic testing.

WAC 296-800-30025 Train your employees to use portable fire extinguishers.

(1) You must train your employees where you have provided portable fire extinguisher for their use in:

(a) The hazards involved with incipient stage firefighting (the early stage of a fire when it can be extinguished by a portable fire extinguisher).

(b) The general principles of fire extinguisher use.

(2) Provide the training when they are first hired and then annually.

Exit routes and employee alarm systems

WAC 296-800-310 Exit routes and employee alarm systems.

Your responsibility: To provide and maintain emergency exit routes and to install and maintain adequate employee alarm systems.

Important:
An employer who demonstrates compliance with the exit route provisions of NFPA 101-2009, the Life Safety Code, will be in compliance with the corresponding requirements of this section.

EXIT ROUTES

You must meet the requirements	*in this section*
Provide an adequate number of exit routes	WAC 296-800-31005
Make sure that exit routes are large enough	WAC 296-800-31010
Make sure that exit routes meet their specific design and construction requirements	WAC 296-800-31015
Make sure that each exit route leads outside	WAC 296-800-31020
Provide unobstructed access to exit routes	WAC 296-800-31025
Exit doors must be readily opened from the inside	WAC 298-800-31030
Use side-hinged doors to connect rooms to exit routes	WAC 298-800-31035
Provide outdoor exit routes that meet requirements	WAC 298-800-31040
Minimize danger to employees while they are using emergency exit routes	WAC 298-800-31045
Mark exits adequately	WAC 298-800-31050
Provide adequate lighting for exit routes and signs	WAC 298-800-31053

You must meet the requirements	*in this section*
Maintain the fire retardant properties of paints or other coatings	WAC 298-800-31055
Maintain emergency safeguards	WAC 296-800-31060
Maintain exit routes during construction and repair	WAC 296-800-31065
Provide doors in freezer or refrigerated rooms that open from the inside	WAC 296-800-31067
Employee Alarm Systems	
Install and maintain an appropriate employee alarm system	WAC 296-800-31070
Establish procedures for sounding emergency alarms	WAC 296-800-31075
Test the employee alarm system	WAC 296-800-31080

EXEMPTION:
This rule does not apply to vehicles, vessels, or other mobile structures

Note: The introduction has important information about building, electrical and fire codes that may apply to you in addition to WISHA rules. See "How do the WISHA rules relate to building, fire, and electrical codes" in the introduction section of this book.

Exit Routes

WAC 296-800-31005 Provide an adequate number of exit routes.

(1) You must provide a minimum of two exit routes to provide different ways for employees to leave the workplace safely during an emergency (at least 2 of the exit routes must be remote from one another so employees can safely exit if one exit route becomes blocked or unavailable).

(2) You must provide an adequate number (at least two) of exit routes, considering the kind, number, location and capacity, appropriate to each building according to the following conditions:

(a) Number of employees.

(b) Size of building.

(c) Arrangement of workplace.

(d) Building occupancy.

> **Note**: A single exit route is permitted where the number of employees, the size of the building, its occupancy, or the arrangement of the workplace indicates that a single exit will allow all employees to exit safely during an emergency. Other means of escape, such as fire exits or accessible windows, should be available where only one exit route is provided.

WAC 296-800-31010 Make sure that exit routes are large enough.

(1) You must make sure each exit route is large enough to accommodate the maximum-permitted occupant load for each floor served by the route.

(2) You must make sure the capacity of an exit route does not decrease at any point.

(3) You must make sure the exit route has a minimum ceiling height of 7 feet 6 inches and that no projection from the ceiling is less than 6 feet 8 inches from the floor. Objects that stick out into the exit route, such as fans hanging from the ceilings or cabinets on walls, must not reduce the minimum height of the exit route to less than 6 feet 8 inches from the floor.

(4) You must make sure exit routes are at least 28 inches wide at all points between any handrails.

(a) If necessary, routes must be wider than 28 inches to accommodate the expected occupant load.

(b) Make sure objects that stick out into the exit route, such as cabinets on walls, do not reduce the minimum width of the exit route.

WAC 296-800-31015 Make sure that exit routes meet their specific design and construction requirements.

(1) You must make sure each exit is a permanent part of the workplace.

(2) You must make sure an exit route has only those openings necessary to permit access to, or exit from, occupied areas of the workplace.

(3) You must make sure any opening into an exit through a fire wall is protected by a self-closing fire door that remains closed.

(4) You must make sure each fire door, its frame, and its hardware is listed or approved by a nationally recognized testing laboratory.

(5) You must make sure construction materials, used to separate an exit route, have at least:

(a) One-hour fire resistance rating if the exit connects three stories or less.

(b) Two-hour fire resistance rating if the exit connects four stories or more.

(6) You must make sure employees are provided with stairs or a ramp, if the exit route is not substantially level.

WAC 296-800-31020 Make sure that each exit route leads outside.

(1) You must make sure that building exit routes lead:

(a) Directly outside or to a street, walkway, refuge area, or to an open space with access to the outside.

(b) To streets, walkways, or open spaces large enough to accommodate all building occupants likely to use the exit.

(2) You must make sure the exit routes clearly show the route employees use to leave the building in an emergency.

(3) You must install a standard safeguard with a warning sign, if a doorway or corner of a building could allow an employee to walk in front of an engine or trolley.

(4) You must use doors, partitions, or other effective means to show employees the correct route out of the building, if the stairs in your exit route lead anywhere but out of the building.

> **Note**: If the stairs in your exit route lead past the exit to the basement, you might install a gate at the point they lead towards that basement. The gate could help your employees stay on the exit route taking them out of the building.

WAC 296-800-31025 Provide unobstructed access to exit routes.

(1) You must provide exit routes that are always free of obstructions so all employees can safely exit the building during an emergency.

(2) You must make sure employees are not required to travel to a dead end or through a room that can be locked, such as a restroom.

WAC 296-800-31030 Exit doors must be readily opened from the inside.

EXEMPTION:
An exit door may be locked or blocked from the inside in a mental, penal, or correctional institution, if supervisory personnel are continuously on duty and a plan exists to remove employees and inmates during an emergency.

You must make sure all exit doors readily open from the inside without keys, tools, or special knowledge. A device that locks only from the outside, such as a panic bar, is permitted. An exit door must be free of any device or alarm that could restrict emergency use of an exit if the device or alarm fails.

WAC 296-800-31035 Use side-hinged doors to connect rooms to exit routes.

You must use a side-hinged exit door to connect any room to an exit route. The door must swing out when the room:

(1) Is occupied by more than fifty persons***;*** or

(2) Contains highly flammable or explosive materials.

WAC 296-800-31040 Provide outdoor exit routes that meet these requirements.

You must make sure an outdoor exit route (such as an interior balcony, porch, gallery, or roof) meets all requirements as an indoor exit route. In addition, an outdoor exit route must also:

(1) Have guardrails to protect unenclosed sides.

(2) Be covered if snow or ice is likely to accumulate without regular removal.

(3) Be reasonably straight with smooth, solid, substantially level floors.

(4) Have no dead ends more than twenty feet long that branch off of the exit route.

WAC 296-800-31045 Minimize danger to employees while they are using emergency exit routes.

(1) You must maintain each exit route to minimize danger to employees during an emergency.

(2) You must keep each exit route free of explosive or highly flammable furnishings and decorations.

(3) You must not require employees to travel toward areas where high hazard materials are stored, unless the route is protected by partitions or physical barriers. High hazard materials are materials that:

   (a) Burn quickly.

   (b) Emit poisonous fumes when burned.

   (c) Are explosive.

WAC 296-800-31050 Mark exits adequately.

(1) You must mark each exit with a clearly visible, distinctive sign reading “EXIT.”

(2) You must make sure the letters in the word “EXIT” are at least six inches high and 3/4 inch wide.

(3) You must mark any doorway or passage that might be mistaken for an exit with “NOT AN EXIT” or with an indication of its actual use.

(4) You must make sure exit signs are a distinctive color.

(5) You must make sure signs are posted and arranged along exit routes to adequately show how to get to the nearest exit and clearly indicate the direction of travel.

(6) You must not obstruct or conceal exit signs in any way.

(7) You must keep exit doors free of signs or decorations that obscure their visibility.

WAC 296-800-31053 Provide adequate lighting for exit routes and signs.

(1) You must illuminate each exit route adequately and reliably.

(2) You must have at least five foot-candles illumination from a reliable light source.

(3) You must make sure any exit signs illuminated by artificial lights and made of translucent material (other than internally illuminated types).

   (a) Have screens, discs or lens of at least twenty-five square inches in size; and

   (b) Show red or other designated color on the approach side of the exit.

(4) You must make sure brightly lit signs, displays, or objects in or near the line of vision do not distract attention from the exit sign.

(5) You must make sure exit signs that are self-lighting have a minimum luminance surface value of .06 footlamberts.

WAC 296-800-31055 Maintain the fire retardant properties of paints or other coatings.

You must maintain any paints or other coatings with fire retardant properties so they retain their fire retardant properties.

WAC 296-800-31060 Maintain emergency safeguards.

You must maintain each safeguard in proper working order to protect employees during an emergency. Emergency safeguards include items such as:

(1) Sprinkler systems.

(2) Alarm systems.

(3) Fire doors.

(4) Exit lighting.

WAC 296-800-31065 Maintain exit routes during construction and repair.

(1) You must have enough exit routes that comply with these rules before letting your employees occupy a workplace under new construction.

(2) You must make sure that employees do not occupy an existing workplace unless:

   (a) All exits and existing fire protection are maintained; or

   (b) Alternate fire protection is provided that ensures an equivalent level of safety.

(3) You must make sure that flammable or explosive materials used during construction or repair do not expose employees to additional hazards or prevent emergency escape.

WAC 296-800-31067 Provide doors in freezer or refrigerated rooms that open from the inside.

You must make sure that walk-in refrigerators or freezer rooms have doors with opening devices allowing them to be opened from the inside even when they are locked from the outside.

Employee Alarm Systems

WAC 296-800-31070 Install and maintain an appropriate employee alarm system.

EXEMPTIONS:
• If you have ten or fewer employees in a particular workplace, you can use direct voice communication to sound the alarm, if all employees can hear it. For this kind of workplace, you do not need a back-up system. • In workplaces where employees would not otherwise be able to recognize audible or visible alarms, you can use tactile devices to alert them.

(1) You must make sure that a working employee alarm system with a distinctive signal to warn employees of fire or other emergencies is installed and maintained.

EXEMPTION:
You do not need an alarm system if employees can promptly see or smell a fire or other hazard in time to provide adequate warning to other employees.

(2) You must make sure that the following systems meet the requirements of this rule, if you use them as your employee alarm system:

(a) Supervisory alarms.

(b) Discharge alarms.

(c) Detection systems required on fixed extinguishing systems.

(d) Detection systems required on fire suppression systems.

(3) You must make sure that your employee alarm systems are:

(a) Providing enough warning to allow employees to safely escape from the workplace, the immediate work area, or both.

(b) Noticeable above surrounding noise or light levels by all employees in the affected portions of the workplace.

(c) Distinctive and recognizable as a signal, to evacuate the work area.

(d) Restored to working order as soon as possible, after each test or alarm.

(e) Supervised, if installed after July 1, 1982, and if it has that capacity.

(f) Able to alert assigned personnel whenever a malfunction exists in the system.

(g) Adequately warning employees of emergencies.

(h) Serviced, maintained, and tested by a person trained in the alarm system's design and functions to keep the system operating reliably and safely.

(i) In working order, except when undergoing repairs or maintenance.

(j) Warning employees of fire or other emergencies with a distinctive signal, if they are not able to see or smell a fire or other hazard.

(k) Manual actuation devices that, if provided, are unobstructed, easy to find, and readily accessible.

(l) Using alarm devices, components, combinations of devices, or systems with approved construction and installation. This applies to steam whistles, air horns, strobe lights, or similar lighting devices, as well as tactile devices.

(m) Supplied with spare alarm devices available to restore the system promptly if a component breaks, is worn, or destroyed.

(n) Kept in full operating condition by maintaining and replacing power supplies as often as necessary.

(o) Supplied with a back-up means of alarm, such as employee runners or telephones, when regular systems are out of service.

WAC 296-800-31075 Establish procedures for sounding emergency alarms.

(1) You must explain to each employee how to sound the alert for emergencies. Methods of reporting emergencies can include:

(a) Manual pull box alarms.

(b) Public address systems.

(c) Radio.

(d) Telephones.

(2) You must post emergency numbers near telephones, employee notice boards, or other conspicuous locations, if you use telephones to report emergencies.

(3) You must require that all emergency messages have priority over all nonemergency messages if the communication system also serves as an employee alarm system.

WAC 296-800-31080 Test the employee alarm system.

(1) You must test the reliability and adequacy of your employee alarm system every two months. Use a different activation device in each test of a multiactuation device system, so the entire alarm system gets tested.

(2) You must make sure that supervised (monitored) employee alarm systems are tested at least once a year for reliability and adequacy.

Accident reporting and investigating

WAC 296-800-320 Accident reporting and investigating.

Your responsibility: To conduct an investigation of certain types of accidents.

You must meet the requirements	*in this section*
Make sure that any equipment involved in a work-related accident is not moved	WAC 296-800-32010
Assign people to assist the department of labor and industries	WAC 296-800-32015
Conduct a preliminary investigation for all serious injuries	WAC 296-800-32020
Document the preliminary investigation findings	WAC 296-800-32025

WAC 296-800-32010 Make sure equipment involved in a work-related accident is not moved.

(1) You must not move equipment involved in a work-related accident if any of the following results:

(a) A death.

(b) An inpatient hospitalization.

(c) An amputation.

(d) The loss of an eye.

(2) You must not move the equipment until a representative of the department of labor and industries investigates the incident and releases the equipment unless:

Moving the equipment is necessary to:

(a) Remove any victims.

(b) Prevent further incidents and injuries.

WAC 296-800-32015 Assign people to assist the department of labor and industries.

You must assign witnesses and other employees to assist department of labor and industries personnel who arrive at the scene to investigate the incident involving:

(1) A death.

(2) An inpatient hospitalization.

(3) An amputation.

(4) The loss of an eye.

Include:

(5) The immediate supervisor.

(6) Employees who were witnesses to the incident.

(7) Other employees the investigator feels are necessary to complete the investigation.

WAC 296-800-32020 Conduct a preliminary investigation for all serious injuries.

(1) You must make sure your preliminary investigation is conducted to evaluate the facts relating to the cause of the incident by the following people:

   (a) A person designated by the employer.

   (b) The immediate supervisor of the injured employee.

   (c) Witnesses.

   (d) An employee representative, such as a shop steward or other person chosen by the employees to represent them.

   (e) Any other person who has the experience and skills.

(2) If the employee representative is the business agent of the employee bargaining unit and is unavailable to participate without delaying the investigation group, you may proceed, by using one of the following:

   (a) The shop steward.

   (b) An employee representative member of your safety committee.

   (c) A person selected by all employees to represent them.

Note:

- A preliminary investigation includes noting information such as the following:
  - Where did the accident or incident occur?
  - What time did it occur?
  - What people were present?
  - What was the employee doing at the time of the accident or incident?
  - What happened during the accident or incident?

WAC 296-800-32025 Document the preliminary investigation findings.

You must document the preliminary investigation findings for use at any formal investigation.

Releasing accident investigation reports

WAC 296-800-330 Releasing accident investigation reports.

(1) The department must keep accident investigations and related reports confidential.

(2) The department must not freely release results of accident investigations and related reports that are confidential.

(3) The department must make available accident investigation reports, without the need of a court order, only to the following:

(a) Injured workers, their legal representatives, or their labor organization representatives.

(b) The legal representative or labor organization representative of a deceased worker.

(c) The employer of any injured or deceased worker.

(d) Any other employer or person whose actions or business operations are the subject of the report or investigation.

(e) Any attorney representing a party in any pending legal action in which an investigative report constitutes material and relevant evidence.

(f) Employees of governmental agencies in the performance of their official duties.

(g) Any beneficiary of a deceased worker actually receiving benefits under the terms of Title 51 RCW, the Industrial Insurance Act.

Note: The records officer may provide accident investigation reports to the closest surviving member of the deceased worker's immediate family.

Protecting the identity of the source of confidential information

WAC 296-800-340 Protecting the identity of the source of confidential information.

(1) The department must not reveal the source of information when a promise has been made to keep the identity of the source confidential.

(2) The department must not disclose information that would reveal the source's identity, whenever a department file contains an investigative report or information from a source under a promise of confidentiality.

(a) The contents of an investigative report may be withheld only to the extent necessary to conceal the identity of the source.

(b) When information is withheld, the records officer must give a general characterization of the information withheld, but must not reveal the identity of the information's source.

Using standards from national organizations and federal agencies

WAC 296-800-360 Using standards from national organizations and federal agencies.

You must use safety and health standards from national organizations and federal agencies, when directed by WISHA rules.

WAC 296-800-36005 Comply with standards of national organizations or federal agencies when referenced in WISHA rules.

You must use the following to be in compliance with WISHA rules:

(1) The edition of the standard specified in the WISHA rule; or

(2) Any edition published after the edition specified in the WISHA rule.

Note: The specific standards referenced in the WISHA rules are available:

- For review at your local department of labor and industries office.
- Through the local library system.
- http://www.wa.gov/lni/pa/dirrect.htm.
- Through the issuing organization.

Accident Investigation Report
Helpful Tool for WAC 296-800-320 Accidents and Incidents; Investigating and Reporting

This sample report form can help document the findings of an investigation into an accident or incident in your workplace. You can copy and use this form or make your own. Fill out an investigation report as soon as possible after an accident or incident.

Employee(s) name(s): _____
_____

Time & date of accident/incident: _____

Job title(s) and department(s): _____
_____

Supervisor/lead person: _____
Witnesses: _____
_____

Brief description of the accident or incident: _____
_____
_____

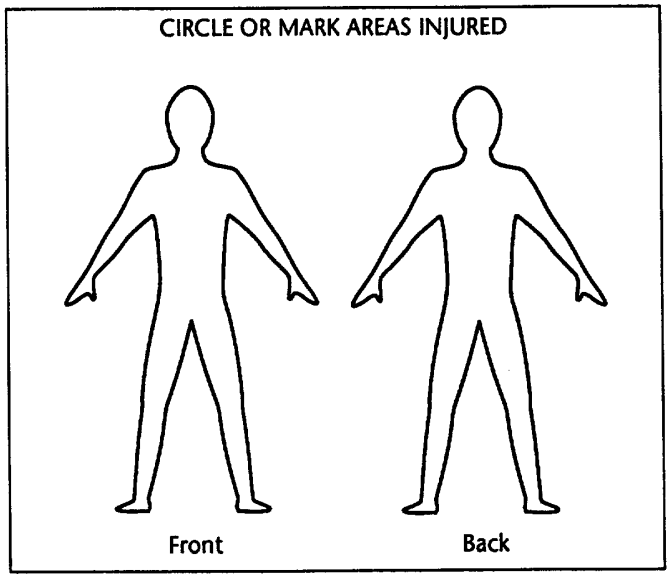

Did the injured employee(s) see a doctor? Yes Y No Y

If yes, did you file an employer's portion of a worker's compensation form? Yes Y No Y

Did the injured employee(s) go home during their work shift? Yes Y No Y

If yes, list the date and time injured employee(s) left job(s): _____
_____

Supervisor's Comments: _____
_____

What could have been done to prevent this accident/incident? _____
_____

Have the unsafe conditions been corrected? Yes Y No Y
If yes, what has been done? _____
_____
_____
If no, what needs to be done? _____
_____

Employer or Supervisor's signature:_____
Date: _____

Additional comments/notes:
_____
_____
_____
_____
_____
_____

Accident/Incident Table
Helpful Tool for WAC 296-800-320 Accidents and Investigations

What is the purpose of this table?
To help you determine if you need to contact L&I or do an investigation in your workplace after an accident or incident.

When do we use this table?
Use this tool when an accident or incident happens or as soon as possible afterwards.

Accident/Incident Table:

Action you must take:	In case of death or probable death	Accident involving inpatient hospitalization of any employee	In case of serious injury or illness	Near miss (accident almost happened) or non-serious injury or illness
Report the accident to L&I and include your phone number.	Required	Required	Not Required	Not Required
Complete and document an investigation.	Required	Required	Required	Not Required

Questions?
You can call L&I's toll-free number for more information: 1-800-4BE SAFE.

Additional Program, Plan and Other Related Requirements That Might Apply

This table will help you determine additional programs, plans, and other related requirements that might be needed beyond your accident prevention program (your total safety and health plan). If you are required to have additional written programs or procedures, they can be included in your accident prevention program or covered in supplemental documents.

To use this table:

1. Determine if any of the activities, hazards or situations listed in the first column apply to you workplace.
2. The second column lists what you may have to do or additional written programs you may be required to have.
3. Look-up the standard or rule that is in column 3. This will allow you to determine if the actual situation at your workplace makes it necessary for you to do anything and will identify what you must do.

Note:

- There are record keeping requirements in chapter 296-27 WAC and elsewhere that you need to be aware of.
- Certain job-specific activities need written, site or activity- specific work plans (for example, the fall protection work plan and lead exposure in construction work).
- There are vertical standards that apply to specific industries, which may have additional program requirements. Be sure to check to find out if these standards apply to you.

1. **If individuals in your workplace:**	**2. Then you may need to :**	**3. See:**
Are exposed to **hazards**	Determine personal protective equipment (PPE) required based on a mandatory job hazard assessment. **Written** certification is also mandatory.	WAC 296-800-160
Work around **hazardous chemicals**	Establish a **written** chemical hazard communication program	WAC 296-800-170
Service, adjust, or maintain equipment in your workplace where people could be injured by the unexpected start-up of the machine or the release of stored energy	Establish a **written** energy control (lockout/tagout) program	Chapter 296-803 WAC
Work around **loud noise**	Establish a hearing conservation program, including hearing tests and training	Chapter 296-817 WAC
Weld, cut, or do **brazing**	Make sure rules and instructions to operate and maintain oxygen or fuel-gas supply equipment are readily available	Chapter 296-24 WAC, Part I
Are required to use **respirators or voluntarily use respirators** to protect against airborne hazards	Establish a **written** respirator program	Chapter 296-842 WAC
May be exposed to blood or other potentially infectious material **(bloodborne pathogens)**	Establish a **written** exposure control plan	Chapter 296-823 WAC
May encounter **confined spaces** in your workplace	Conduct a survey to identify confined spaces. If employees are to enter confined spaces, special procedures and a **written** program may be required	Chapter 296-809 WAC
Work in **late night retail** (a retail establishment open between 11:00 p.m. and 6:00 a.m.	Provide crime prevention training as part of your accident prevention program	Chapter 296-832 WAC

1. **If individuals in your workplace:**	**2. Then you may need to :**	**3. See:**
May be injured by an activated **fire suppression system**	Establish a **written** emergency action plan	Chapter 296-24 WAC, Part G-1
Are required to perform specific actions during emergency situations involving the release of **hazardous substances.**	Establish a **written** emergency response plan or, if appropriate, a **written** emergency action plan	Chapter 296-824 WAC and Chapter 296-24 WAC, Part G-1
Are **agricultural** workers	Follow accident prevention program requirements in WAC 296-307-030. Agricultural employees are not covered by chapter 296-24 WAC	Chapter 296-307 WAC
Are electrical workers working on or near **high voltage**	Include additional elements in your accident prevention program	Chapter 296-45 WAC
Are **fire fighters**	Develop a risk management policy with incident strategies that can be incorporated into the incident command system	Chapter 296-305 WAC
Are exposed to substances such as **asbestos, tremolite, anthopyllite, or actinolite**	Establish and implement a **written** program to reduce employee exposure to or below the permissible limit	Chapter 296-62 WAC, Part I-1
Are involved in **hazardous waste operations**	Develop and implement a **written** safety and health program for these operations	Chapter 296-843 WAC
Are involved with **diving operations**	Develop and maintain a **written** safe practices manual	Chapter 296-37 WAC
Are involved with **ski area facilities** and operations	Develop a specific **written** safety program	Chapter 296-59 WAC
Are involved with **telecommunications**	Include additional elements in your accident prevention program that specifically cover this work.	Chapter 296-32 WAC

1. **If individuals in your workplace:**	**2. Then you may need to :**	**3. See:**
May be exposed to specific **air contaminants** (listed in Chapter 296-62	Establish and implement a **written** compliance program	Chapter 296-62 WAC Part I
Use **powered platforms** installed as part of a building to do building maintenance	Provide **written** work procedures for the operation, safe use, and inspection of the equipment	Chapter 296-870 WAC
Work in a **laboratory** using hazardous chemicals	Develop and carry out the provisions of a **written** chemical hygiene plan	Chapter 296-62 WAC Part Q
Work in **grain handling facilities**	Develop and implement a **written** housekeeping program	Chapter 296-99 WAC
May be exposed to certain **carcinogens** (cancer causing agents)	Implement a **written** program to reduce exposure to or below permissible limits	Chapter 296-62, WAC Part G
Work with toxic, reactive, flammable, or explosive chemicals (**process safety management of highly hazardous chemicals**)	Develop a **written** plan for preventing or minimizing the consequences of catastrophic releases	Chapter 296-67 WAC
Are **blasting** from an **aircraft**	This requires a **written** program approved by the Federal Aviation Administration and the director of the department of labor and industries.	Chapter 296-59 WAC
Are exposed to operating **coke ovens**	Implement a **written** program to reduce employee exposure	Chapter 296-62 WAC, Part O

Helpful Tool for WAC 296-800-120 Employee Responsibilities and Chapter 296-360 WAC Discrimination
WISHA Employee Rights

If you, as an employee, complain about or report information about safety or health issues, you have specific rights protected under WISHA. See the table below to find out more.

If:	***Then:***
You believe you are being asked to do something potentially unsafe.	Report it to your employer and ask them to correct it, ask for other work, remain on the job until ordered to leave by the employer, or inform the employer that you will refuse to work if the hazard is not corrected.
You file a safety or health complaint for violations of Washington Administrative Code (WAC).	L&I will review your complaint to see if it warrants investigation.
You quit or leave the worksite because your employer asks you to do something potentially unsafe on the job.	WISHA may not be able to protect your rights or investigate your complaint. However, you are not required to do potentially unsafe work.
You give a witness statement to a compliance inspector during an accident investigation or safety and health inspection.	You may ask to have your identity withheld at the time you give your statement. The compliance inspector should have you date, sign, and check the applicable blocks on a witness statement form.
Your employer retaliates against you for filing a complaint or giving a compliance inspector a statement about an accident or safety and health inspection….	You have 30 days to file a discrimination complaint against your employer. To file a complaint contact your local Labor & Industries office and ask for the WISHA Discrimination Section.

Note:

Other protections exist for employees under Title 51.

Questions?
You can either call 1-800 4BESAFE or visit the WISHA web site for more information.

Hazard Assessment Checklist

Helpful Tool for WAC 296-800-160 Personal Protective Equipment (PPE)

This checklist can help you do a hazard assessment to see if employees need to use personal protective equipment (PPE). You can make copies or develop a form that is appropriate to your workplace.

Hazard Assessment Checklist

Some work activities are more hazardous than others. This list can help identify those activities that may create hazards for your employees. Read through the list, putting a check next to any word that describes an activity in your workplace. We have grouped the activities according to what part of the body might need PPE.

Eyes Work activities: ( )sawing ( )cutting ( )drilling ( )sanding ( )grinding ( )hammering ( )chopping ( )abrasive blasting ( )punch press operations ( )intense light/welding ( )other_____ Work related exposure to: ( )airborne dust ( )flying particles ( )blood splashes ( )hazardous liquid chemicals ( )other_____	**Face** Work activities: ( )pouring ( )mixing ( )painting ( )cleaning ( )siphoning ( )dip tank operations ( )welding ( )pouring molten metal ( )foundry work ( )cooking ( )other_____ Work related exposure to: ( )hazardous liquid chemicals ( )extreme heat ( )cold ( )potential irritants ( )other_____
Head Work activities: ( )construction ( )utility work ( )confined space operations ( )use of catwalks ( )building maintenance ( )use of crane loads ( )electrical wiring ( )use of conveyor belts ( )other_____ Work related exposure to: ( )falling objects ( )beams ( )machine parts ( )pipes ( )exposed electrical wiring or components ( )other_____	**Feet** Work activities: ( )construction ( )plumbing ( )foundry work ( )building maintenance ( )trenching ( )demolition ( )use of highly flammable materials ( )welding ( )logging ( )food processing ( )other_____ Work related exposure to: ( )tools ( )heavy equipment ( )exposed electrical wiring or components ( )slippery surfaces ( )explosives ( )explosive atmospheres ( )other_____
Hands Work activities such as:	**Inhalation** Work activities such as:

( )grinding ( )sawing
( )use of computers ( )hammering
( )working with glass ( )use of knives
( )material handling ( )welding
( )baking ( )cooking
( )dental and health care services ( )sanding
( )other_____

Work related exposure to:
( )tools or materials that could scrape, bruise, or cut
( )irritating chemicals ( )blood
( )other_____

( )pouring ( )mixing
( )painting ( )cleaning
( )sawing ( )fiberglass installation
( )compressed air or gas operations
( )other_____

Work related exposure to:
( )irritating dust
( )extreme heat/cold
( )other_____

Hearing

Work activities such as:
( )machining ( )grinding
( )sawing ( )sanding
( )use of conveyors ( )motors
( )pneumatic equipment ( )generators
( )ventilation fans ( )routers
( )punch or brake presses
( )other_____

Work related exposure to:
( )punch or brake presses ( )loud noises
( )noisy machines/tools
( )loud work environment
( )other_____

General hazards

Work activities such as:
( )utility work
( )logging
( )building maintenance
( )construction
( )other_____

Work related exposure to:
( )working from heights of 10 feet or more
( )working near water
( )other_____

Skin

Work activities such as:
( )battery charging ( )sawing
( )fiberglass installation ( )dip tank operations
( )irritating chemicals ( )baking or frying

Work related exposure to:
( )sharp or rough edges ( )chemical splashes
( )extreme heat/cold

Your name:_____
Name of your workplace:
_____
Workplace address:_____
_____
Dates of Hazard Assessment for PPE:
_____

Helpful Tool for WAC 296-800-120 Employees Responsibilities and WAC 296-800-140 Accident Prevention Program

This is an optional form that either an employee or employer can use to report a hazard

If you complete this as an employee, give a completed copy to your employer. If you do not want to include your name on the form, make sure to give enough details about the hazard so your employer can recognize and correct it.

Employee's Description of a Workplace Hazard

Your name:_____ **Today's Date**:_____
(Optional)

Briefly describe the workplace hazard:
(Please give more details if you are filling this out anonymously. Use the back if you need more room)

_____
_____
_____
_____

Where is the hazard located?_____
_____

Has the hazard been reported to your employer?_____

If so, who was it reported to?_____

- **Briefly describe what has been done to correct the hazard**

_____
_____
_____
_____

- **Who took action to correct the hazard?**

_____
_____
_____

Safety Meeting Minutes

Helpful Tool for WAC 296-800-130 Safety Committees and Safety Meetings

This form can help document the minutes of safety meetings in your workplace. This particular form is not required, but shows the kind of information you need for your records. You can either copy this form or make your own.

Remember, you must:

- Keep meeting minutes for one year.
- Cover specific topics in your meetings.

Agenda:

Review of minutes of last safety meeting: Approved? ( )Yes (No)
Corrections:_____

1. **Unfinished business from last meeting:**
_____
_____
_____

2. **Any hazards reported during this time period?**_____
_____
_____
_____

3. **Describe any accident investigations conducted since last meeting. Did you identify and correct the cause of the unsafe situation(s)?**_____
_____
_____
_____

4. **Is your accident and illness prevention program working? ( )Yes ( ) No If no, describe any recommendations to improve it.**_____
_____
_____

5. **What other safety-related topics did you cover in this meeting?**_____
_____
_____
_____

Employer: **Worksite location:**

_____

Date:_____**Meeting Start Time:**_____**Meeting End Time:**_____

Who attended this meeting?

_____
_____
_____
_____
_____
_____
_____
_____
_____

Minutes written by: **Meeting Leader:**

_____

Next meeting will be on (date): **Next meeting location:**

_____**How Likely is an injury or illness to occur in your workplace? Check the box that best applies.**

( )very likely ( )somewhat likely
( )likely ( )unlikely, we have not had an on-the-job accident in years

How complex is your worksite? (Check all boxes apply)

( )Large or spread out worksite (for example, a logging area)
( )poorly planned building
( )medium sized worksite
( )small worksite
( )1 story building with plenty of exits and parking

Sample Hazardous Chemical Communication Program

Company Policy

_____ is committed to the prevention of exposures that result
(Name of employer)
in injury and/or illness; and to comply with all applicable state health and safety rules. To make sure that all affected employees know about information concerning the dangers of all hazardous chemicals used by _____, the following hazardous
(Name of employer)
information program has been established.
All work units of _____ will participate in the hazard communication
(Name of employer)
program. This written program will be available in _____ for
(Specify the location)
review by any interested employee.

Container Labeling

_____ is responsible for container labeling procedures,
(Name of person and position)
reviewing, and updating. The labeling system used at _____ is as follows:
(Name of employer)

(Describe the labeling system, including the labels or other forms of warning used, and written alternatives to labeling, if any.)

_____

_____

_____

_____

The procedures for proper labeling of all containers, and reviewing and updating label warnings are as follows:

(Also include a description of the procedures for labeling of secondary containers used, including making sure that they have the appropriate identification and hazard warning, etc.; description of procedures for reviewing and updating label warnings, how often the review is conducted, and the name of the person and position who is responsible for reviewing and updating label warnings.)

_____

_____

_____

It is the policy of _____ that no container will be released for
(Name of employer)

use until the above procedures are followed.

Safety Data Sheets (SDS)s

_____ is responsible to establish and monitor the
(Name of person and position)

employer's SDS program. This person will make sure procedures are developed to obtain the necessary SDSs and will review incoming SDSs for new or significant health and safety information. This person will see that any new information is passed on to affected employees. The procedures to obtain SDSs and review incoming SDSs for new or significant health and safety information are as follows:

(Include procedures on how to make sure copies are current and updated, how any new information is passed on to affected employees, and the procedures for employee access in work area.)

_____
_____
_____
_____
_____

Copies of SDSs for all hazardous chemicals in use will be kept in _____
(Specify the location)

SDSs will be available to all employees during each work shift. If an SDS is not available or a new chemical in use does not have an SDS, immediately contact
_____ _____
(Name of person and position)

Note: If an alternative to printed Material Safety Data Sheets is used (such as computer *data), provide a description of the format.*

Employee Information and Training

_____ is responsible for the employer employee training program.
(Name of person and position)

The procedures for how employees will be informed and trained are as follows:

(Include the methods used for general and site-specific training, and how employees will be informed when non-routine tasks arise. If your employees work at other employers' job sites, then specify where and how these employees will have access to SDSs and labels, and how they will be informed of precautionary measures to take during normal or emergency operations, if any.)

_____

_____

_____

_____

_____

_____

_____ will make sure that before starting work, each new employee of
(Name of person and position)

_____ will attend a health and safety orientation that includes
(Name of employer)

information and training on the following:

- An overview of the requirements contained in the Hazard Communication Standard.
- Hazardous chemicals present at his or her work places.
- Physical and health risks of the hazardous chemical.
- The symptoms of overexposure.
- How to determine the presence or release of hazardous chemicals in his or her work area.
- How to reduce or prevent exposure to hazardous chemicals through use of control procedures, work practices, and personal protective equipment.
- Steps the employer has taken to reduce or prevent exposure to hazardous chemicals.
- Procedures to follow if employees are overexposed to hazardous chemicals.
- How to read labels and review SDSs to obtain hazard information.
- Location of the SDS file and written hazard communication program.

Before introducing a new chemical hazard into any section of this employer, each employee in that section will be given information and training as outlined above for the new chemical.

xdous non-routine tasks

Periodically, employees are required to perform hazardous non-routine tasks. (Some examples of non-routine tasks are confined space entry, tank cleaning, and painting reactor vessels.) Non-routine tasks that are performed at _____ include:
(Name of employer)

1. _____

2. _____

3. _____

Prior to starting work on such projects, each affected employee will be given information

by _____ about the hazardous chemicals he or she may encounter
(Name of person and position)

during these activities:

(For each activity, list the specific chemical hazards, protective and safety measures the employee can use, and the steps the employer has taken to reduce the hazards, including ventilation, respirators, presence of another employee, and emergency procedures.

_____

_____

_____

_____

_____

Multi-employer work places

It is the responsibility of _____ to provide employers of any other
(Name of person and position)

employees at the work site with the following information:

- Copies of SDSs (or make them available at a central location) for any hazardous chemicals that the other employer(s)' employee may be exposed to while working.
- Inform other employers of any precautionary measures that need to be taken to protect employees during normal operating conditions or in foreseeable emergencies.
- Provide other employers with an explanation of the labeling system that is used at the work site.

It is also the responsibility of _____ to identify and obtain SDSs for

(Name of person and position)

the chemicals the contractor is bringing into the work place.

List of hazardous chemicals

The following is a list of all known hazardous chemicals used by our employees. Further information on each chemical may be obtained by reviewing SDSs located at

_____

(Specify the location)

SDS identity: *(Here is where you put the chemical list developed during the inventory. Arrange this list so that you are able to cross-reference it with your SDS file and the labels on your containers.)*

The criteria (e.g., label warnings, SDS information, etc.) used to evaluate the chemicals are:

(Include a description of a plan for how you will update the list.)

Chemical Name	Manufacturer	Location Used

Helpful Tool for WAC 296-800-170

Sample Labels for Hazardous Chemical Containers

The sample labels on the following page show the type of information you must list on containers of hazardous chemicals. You can copy and use these labels or you can make your own.

Be sure your labels contain the following information:

- Name of Chemical
- Physical Hazards
- Health Hazards, Target Organs or Systems
- Optional information, such as Personal Protective Equipment or Safe HandlingAfter you have finished typing or writing in your information, print the labels. Then, cut out the individual labels and apply them to your hazardous chemical containers.

Chemical Labels

NAME OF CHEMICAL

Physical Hazards

Health Hazards, Target Organs or Systems

Optional Information, such as Personal Protective Equipment or Safe Handling

NAME OF CHEMICAL

Physical Hazards

Health Hazards, Target Organs or Systems

Optional Information, such as Personal Protective Equipment or Safe Handling

NAME OF CHEMICAL

Physical Hazards

Health Hazards, Target Organs or Systems

Optional Information, such as Personal Protective Equipment or Safe Handling

NAME OF CHEMICAL

Physical Hazards

Health Hazards, Target Organs or Systems

Optional Information, such as Personal Protective Equipment or Safe Handling

NAME OF CHEMICAL

Physical Hazards

Health Hazards, Target Organs or Systems

Optional Information, such as Personal Protective Equipment or Safe Handling

NAME OF CHEMICAL

Physical Hazards

Health Hazards, Target Organs or Systems

Optional Information, such as Personal Protective Equipment or Safe Handling

NAME OF CHEMICAL

Physical Hazards

Health Hazards, Target Organs or Systems

Optional Information, such as Personal Protective Equipment or Safe Handling

NAME OF CHEMICAL

Physical Hazards

Health Hazards, Target Organs or Systems

Optional Information, such as Personal Protective Equipment or Safe Handling

Sample Letter for Requesting a Safety Data Sheet (SDS)

Use with WAC 296-800-170

This sample form letter shows what information you need to include when requesting Safety Data Sheets (SDSs) from a manufacturer or distributor. You can use this sample as a guide to develop your own form letter.

Sample Form Letter

Date of your request
Name of manufacturer/distributor you need the SDS from
Their address
City, state, zip code
Their fax number if you make this request by fax

Subject: Safety Data Sheet Request (SDS)

Please send us the (SDSs) for the following product(s):

(1)

(2)

(3)

Our business needs the SDS(s) listed above to comply with the Chemical Hazard Communication Standard, WAC 296-800-170. Please make sure that the SDS(s) you send us meet the requirements of the content and distribution of material safety data sheets (SDSs) and label information, chapter 296-839 WAC (equivalent to 29 CFR 1910.1200, OSHA Hazard Communication Standard).

Thank you for your immediate response.

Sincerely,

Your name
Your company's name
Business address

Training Documentation Form

Helpful Tool for use with:

WAC 296-800-140 Accident Prevention Program (recommended)

WAC 296-800-150 First Aid (recommended)

WAC 296-800-160 Personal Protective Equipment (PPE) (required)

WAC 296-800-300 Portable Fire Extinguishers (recommended)

This sample form can help you verify in writing that each employee who needs training has received and understood it. You can copy this sample form or create your own.

(1) Accident Prevention Program, safety orientation

(2) Personal Protective Equipment Type: _____

(3) Chemical Hazard Communication

(4) First Aid

(5) Portable Fire Extinguishers

(6) Date(s) of training: _____

List of employee(s) who completed this training: _____ _____

_____ _____

_____ _____

_____ _____

_____ _____

_____ _____

_____ _____

_____ _____

Trainer/Employer: _____

Complete list of WISHA Safety and Health Rules

These are the other safety and health rules you may need to comply with. To obtain a copy of these rules, call 1-800- 4BE SAFE (1-800-423-7233).

General Safety and Health Rules

Access to Records
Chapter 296-802 WAC

Air Contaminants
Chapter 296-62 WAC, Part I

Asbestos, Tremolite, Anthophyllite, and Actinolite
Chapter 296-62 WAC, Part I

Atmospheres, Ventilation
Chapter 296-62 WAC, Part L

Carcinogens
Chapter 296-62 WAC, Part G

Coke Ovens
Chapter 296-62 WAC, Part O

Compressed Gas and Equipment
Chapter 296-24 WAC, Part K

Safety Standards for Hazard Communication
Chapter 296-901 WAC

Cotton Dust
Chapter 296-62 WAC, Part N

Dipping and Coating Operations (Dip Tanks)
Chapter 296-835 WAC

Electrical
Chapter 296-24 WAC, Part L

Emergency Response
Chapter 296-824 WAC

Fire Protection
Chapter 296-24 WAC, Part G-2

Fire Suppression Equipment
Chapter 296-24 WAC, Part G-3

Hazardous Chemicals in Laboratories
Chapter 296-62 WAC, Part Q

Hazardous Materials, Flammable and Combustible Liquids, Spray Finishing
Chapter 296-24 WAC, Part E

Hazardous Waste Operations
Chapter 296-843 WAC

Hearing Loss Prevention (Noise)
Chapter 296-817 WAC

Helicopters Used as Lifting Machines
Chapter 296-829 WAC

Late Night Retail Worker Crime Prevention
Chapter 296-832 WAC

Machinery and Machine Guarding
Chapter 296-24 WAC, Part C (After January 1, 2005 see Chapter 296-806 WAC)

Material Handling and Storage, Including Cranes, Derricks, etc.
Chapter 296-24 WAC, Part D

Means of Egress
Chapter 296-24 WAC, Part G-1

Occupational Exposure to Bloodborne Pathogens
Chapter 296-823 WAC

Portable Power Tools
Chapter 296-807 WAC

Powered Platforms
Chapter 296-24 WAC, Part J-3

Respirators
Chapter 296-842

Respiratory Hazards
Chapter 296-841 WAC

Safe Practices of Abrasive Blasting Operations, Ventilation
Chapter 296-24 WAC, Part H-2

Safety Procedures
Chapter 296-24 WAC, Part A-4 (After November 1, 2004 see Chapter 296-803 WAC)

Safety Standards for Window Cleaning
Chapter 296-878 WAC

Scaffolds
Chapter 296-874 WAC

Storage and Handling of Anhydrous Ammonia
Chapter 296-24 WAC, Part F-2

Storage and Handling of Liquefied Petroleum Gases
Chapter 296-24 WAC, Part F-1

Temporary Housing for Workers
Chapter 296-833 WAC

Trade Secrets
Chapter 296-62 WAC, Part B-1

Welding, Cutting and Brazing
Chapter 296-24 WAC, Part I

Working Surfaces, Guarding Floors and Wall Openings, Ladders
Chapter 296-24 WAC, Part J-1

Chapter 296-155 WAC, Safety Rules for Construction Work

Concrete, Concrete Forms, Shoring, and Masonry Construction, Part O
WAC 296-155-675

Cranes, Derricks, Hoists, Elevators, and Conveyors, Part L
WAC 296-155-525

Demolition, Part S
WAC 296-155-775

Electrical, Part I
WAC 296-155-426

Excavation, Trenching, and Shoring, Part N
WAC 296-155-650

Fall Restraint and Fall Arrest, Part C-1
WAC 296-155-245

Fire Protection and Prevention, Part D
WAC 296-155-250

Floor Openings, Wall Openings, and Stairways, Part K
WAC 296-155-500

General Safety and Health Provisions, Part A
WAC 296-155-001

Hazard Communication, Part B-2
WAC 296-155-180

Material Handling, Storage, Use and Disposal, Part F
WAC 296-155-325

Miscellaneous Construction Requirements, Part R
WAC 296-155-755

Motor Vehicles, Mechanized Equipment, and Marine Operations, Part M
WAC 296-155-600

Occupational Health and Environmental Control, Part B-1
WAC 296-155-100

Personal Protective and Lifesaving Equipment, Part C
WAC 296-155-200

Power Distribution and Transmission Lines, Part U
See Chapter 296-45 WAC, Electric power generation, transmission and distribution

Rollover Protective Structures and Overhead Protection, Part V
WAC 296-155-950

Scaffolds, Part J-1
WAC 296-155-481

Signs, Signals, and Barricades, Part E
WAC 296-155-300

Stairways and Ladders, Part J
WAC 296-155-475

Steel Erection, Part P
WAC 296-155-700

Tools, Hand and Power, Part G
WAC 296-155-350

Underground Construction, Part Q
WAC 296-155-725

Welding and Cutting, Part H
WAC 296-155-400

Industry Specific Rules

Agriculture
Chapter 296-307 WAC

Asbestos Removal and Encapsulation
Chapter 296-65 WAC

Charter Boats
Chapter 296-115 WAC

Clearance Rules - Railroads in Private Yards and Plants
Chapter 296-360 WAC

Commercial Diving Operations
Chapter 296-37 WAC

Compressed Air Work
Chapter 296-36 WAC

Electric power generation, transmission and distribution
Chapter 296-45 WAC

Explosives, Possession and Handling
Chapter 296-52 WAC

Fire Fighters
Chapter 296-305 WAC

Grain Handling Facilities
Chapter 296-99 WAC

Laundry Machinery and Operations
Chapter 296-303 WAC

Logging Operations
Chapter 296-54 WAC

Longshore, Stevedore and Related Waterfront Operations
Chapter 296-56 WAC

Process Safety Management of Highly Hazardous Chemicals
Chapter 296-67 WAC

Pulp, Paper, and Paperboard Mills and Converters
Chapter 296-79 WAC

Railroad Clearances and Walkways in Private Rail Yards and Plants
Chapter 296-860 WAC

Right to Know Fee Assessment
Chapter 296-63 WAC

Sawmills and Woodworking Operations
Chapter 296-78 WAC

Ship Repairing, Shipbuilding and Shipbreaking
Chapter 296-304 WAC

Ski Area Facilities and Operations
Chapter 296-59 WAC

Telecommunications
Chapter 296-32 WAC

Textile Industry
Chapter 296-301 WAC

LINKS

ACGIH (American Conference of Governmental Industrial Hygienists)	
https://www.acgih.org//	**1330 Kemper Meadow Dr. Ste 600** **Cincinnati OH 45240** **Phone: (513) 742-6163** **Fax: (513) 742-3355**

AIHA (American Industrial Hygiene Association)	
www.aiha.org	**2700 Prosperity Ave Ste. 250** **Fairfax, VA 22031** **Phone: (703) 849-8888** **Fax: (703) 207-3561**

ANSI (American National Standards Institute)	
http://www.ansi.org	**1819 L Street,NW** **Washington, DC 20036** **Phone: (202) 293-8020** **Fax: (202) 293-9287**

ASSE (American Society of Safety Engineers)	
http://www.asse.org	**1800 E. Oakton St.** **Des Plains, IL 60018** **Phone: (847) 699-2929** **Fax: (847) 768-3434**

Australia's National Occupational Health and Safety Commission	
https://www.safeworkaustralia.gov.au/about-us	**GPO Box 58** **Sydney NSW 2001** **Australia** **Phone: +61 2 9577 9555** **Toll Free: 1-800-252-226** **Fax: +61 2 9577 9202**

Department of Environmental Health	
http://depts.washington.edu/envhlth/index.html	**University of Washington** **Box 357234** **Seattle, WA 98195-7234** **Phone: (206) 543-3199**

Environmental Tobacco Smoke
https://lni.wa.gov/safety-health/safety-topics/search-by-topic?index=Safety_Topics&query=environmentalSmoke

Evergreen Safety Council	
http://www.esc.org	**401 Pontius Ave.** **Seattle WA 98109** **Phone: (206) 382-4090** **Toll Free: (800) 521-0778** **Fax: (206) 382-0878**

Guidelines for First Aid Training Curriculums **1-800-4BE SAFE (1-800-423-7233)** http://wisha-training.lni.wa.gov/Training/presentations/FirstAidGeneralIndustry.pps

L&I (State of Washington Department of Labor and Industries) **(See also WISHA)**
Homepage: http://www.lni.wa.gov
To find the L&I office nearest you: http://www.wa.gov/lni/pa/direct.htm **1-800-4BE SAFE (1-800-423-7233)**
L&I training opportunities: http://www.lni.wa.gov./safety

NIOSH (National Institute for Occupational Safety & Health)	
http://www.cdc.gov/niosh/homepage.html	**4676 Columbia Parkway** **Cincinnati, OH 45226-1998** **Phone: (800) 356-4674**

Northwest Center for Occupational Safety and Health Training	
http://depts.washington.edu/envhlth/conted/ce/index.html	**4225 Roosevelt Way NE, Ste. 100** **Seattle, WA 98105** **Phone (206) 543-1069** **Fax (206 685-3872**

OSHA (Occupational Safety and Health Administration)	
http://www.osha.gov	**200 Constitution Avenue NW** **Washington, DC 20210** **Phone: (800) 321-6742** **Region 10 Office** **111 Third Avenue, Ste. 715** **Seattle, WA 98101-3212**

This list compares WISHA and OSHA requirements.

Safety & Health Core Rules	Code of Federal Regulations
Introduction WAC 296-800-100	None
Employer Responsibilities: Safe Workplace WAC 296-800-110	None
Employee Responsibilities WAC 296-800-120	None
Safety Committees and Safety Meetings WAC 296-800-130	None
Accident Prevention Program WAC 296-800-140	None
First Aid WAC 296-800-150	CFR 1910.151
Personal Protective Equipment (PPE) WAC 296-800-160	Personal Protective Equipment CFR 1910 Subpart I
Employer Chemical Hazard Communication WAC 296-800-170	Hazardous Materials CFR 1910.1200, 1201 Subpart H
Material Safety Data Sheets (SDSs) as Exposure Records WAC 296-800-180	Hazardous Materials CFR 1910.1020 Subpart Z
Safety Bulletin Board WAC 296-800-190	None
WISHA Poster WAC 296-800-200	CFR 1903.2A1
Lighting WAC 296-800-210	None
Housekeeping, Drainage, & Storage WAC 296-800-220	Walking-Working Surfaces CFR 1910.22 Subpart D General Environmental Controls CFR 1910.141 Subpart J Materials Handling and Storage CFR 1910. 176 Subpart N
Drinking Water, Bathrooms, Washing Facilities, & Waste Disposal WAC 296-800-230	General Environmental Controls CFR 1910.141 Subpart J

Environmental Tobacco Smoke in the Office WAC 296-800-240	None
Stairs and Stair Railings WAC 296-800-250	Walking-Working Surfaces CFR 1910.24 Subpart D
Floor Openings, Floor Holes and Open-sided Floors WAC 296-800-260	Walking-Working Surfaces CFR 1910.23 Subpart D
Workplace Structural Integrity WAC 296-800-270	Walking-Working Surfaces CFR 1910.22 Subpart D
Electrical WAC 296-800-280	Electrical CFR 1910 .Subpart S
Portable Ladders: Metal & Wooden WAC 296-800-290	Walking-working surfaces CFR 1910. Subpart D
Portable Fire Extinguishers WAC 296-800-300	Fire Protection CFR 1910 Subpart L
Exit Routes & Employee Alarm Systems WAC 296-800-310	Means of Egress CFR 1910.Subpart E Fire Protection CFR 1910 Subpart L
Accident Reporting and Investigation WAC 296-800-320	Recording and Reporting Occupational Injuries and Illness CFR 1904.8
Releasing Accident Investigation Reports WAC 296-800-330	None
Protecting the Identity of the Source of Confidential Information WAC 296-800-340	None
WISHA Appeals, Penalties, and Procedural Rules WAC 296-800-350	Inspections, Citations, and Proposed Penalties CFR 1903
Using standards from National Organizations and Federal Agencies WAC 296-800-360	None
Definitions WAC 296-800-370	None

Service Locations for L&I

Aberdeen
(360) 533-8200
FAX: (360) 533-8220
TDD: (360) 533-9336
Attention: Safety and Health
415 West Wishkah, Suite 1B
Aberdeen, WA 98520-0013

Bellevue
(425) 990-1400
FAX: (425) 990-1445
TDD: (425) 990-1450
Attention: Safety and Health
616 - 120th Avenue NE, Suite C201
Bellevue, WA 98005-3037

Bellingham
(360) 647-7300
FAX: 647-7310
TDD: (360) 647-7299
Attention: Safety and Health
1720 Ellis Street, Suite 200
Bellingham, WA 98225-4677

Bremerton
(360) 415-4000
FAX: (360) 415-4047
TDD: (360) 415-4014
Attention: Safety and Health
500 Pacific Avenue, Suite 400
Bremerton, WA 98337-1943

Colville
(509) 684-7417
Toll-free 1-800-509-9174
FAX: (509) 684-7416
Attention: Safety and Health
298 South Main, Suite 203
Colville, WA 99114-2416

Note: There is no WISHA staff at this service location. IF you would like to talk to a WISHA staff person, please call the Spokane service location.

East Wentachee
(509) 886-6500
FAX: (509) 886-6510
TDD: (509) 886-6512
Toll-free 10800-292-5920
Attention: Safety and Health
519 Grant Road
East Wenatchee, WA 98802-5459

Everett
(425) 290-1300
FAX: (425) 290-1399
TDD: (425) 290-1407
Attention: Safety and Health
729 100th St. S.E.
Everett WA 98208-3727

Kennewick
(509) 735-0100
FAX: (509) 735-0120
TDD: (509) 735-0146
Toll-free 1-800-547-9411
Attention: Safety and Health
4310 West 24th Avenue
Kennewick, WA 99336

Longview
(360) 575-6900
FAX: (360) 575-6918
TDD: (360) 575-6921
Attention: Safety and Health
900 Ocean Beach Hwy
Longview, WA 98632-4013

Moses Lake
(509) 764-6900
FAX: (509) 764-6923
TDD: (509) 754-6030
Toll-free (Eastern Washington Only) 1-800-574-2285
Attention: Safety and Health
3001 W. Broadway Ave.
Moses Lake, WA 98837-2907

Mount Vernon
(360) 416-3000
FAX: (360) 416-3030
TDD: (360) 416-3072
Attention: Safety and Health
525 E College Way, Suite H
Mount Vernon, WA 98273-5500

Okanogan
(509) 826-7345
FAX: (509) 826-7349
TDD: (509) 826-7370
Toll-free (Eastern Washington Only) 1-800-942-4387
Attention: Safety and Health
1234 2nd Avenue S
Okanogan, WA 98840-9723

Pullman
(509) 334-5296
Toll-free 1-800-509-0025
Attention: Safety and Health
FAX: (509) 334-3417
1250 Bishop Blvd SE, Suite G
PO Box 847
Pullman, WA 99163-0847

Seattle
(206) 515-2800
FAX: (206) 515-2799
TDD: (206) 515-2803
Attention: Safety and Health
315 5th Avenue South, Suite 200
Seattle, WA 98104-2607

Sequim
(360) 417-2700
FAX: (360)
TDD: (360)
Toll Free: (360)
Campus Mail: SEQU
Attention: Safety and Health
542 West Washington Street
Sequim, WA 98383

Silverdale
(360) 308-2800
FAX:
TDD:
Toll Free:
Campus Mail: SILV
Attention: Safety and Health
10049 Kitsap Mall Boulevard Northwest, Suite 100
Silverdale, WA 98383

Spokane
(509) 324-2600
Toll-free: 1-800-509-8847
FAX: (509) 324-2636
TDD: (509) 324-2653
Attention: Safety and Health
901 N Monroe Street, Suite 100
Spokane, WA 99201-2149

Tacoma
(253) 596-3800
FAX: (253) 596-3956
TDD: (253) 596-3887
Attention: Safety and Health
950 Broadway, Suite 200
Tacoma, WA 98402-4453

Tukwila
(206) 248-8240
FAX: (206) 248-8296
TDD: (206) 835-1102
Attention: Safety and Health
PO Box 69050(Mail Only)
12806 Gateway Drive (Physical Address Only)
Seattle, WA 98168-1050

Tumwater
(360) 902-5799
FAX: (360) 902-5792
TDD: (360) 902-4637
Attention: Safety and Health
1st Floor, Lobby
Mailing address: PO Box 44851
Olympia, WA 98504-4851
Physical address: 7273 Linderson Way SW
Tumwater, WA 98501-5414

Please note: The physical address for our Tumwater building is not for U.S. Postal Service mail (unless specifically requested by USPS). Using this address may significantly delay delivery.

Vancouver
(360) 896-2300
FAX: (360) 896-2345
TDD: (360) 896-2304
Attention: Safety and Health
312 SE Stonemill Dr, Suite 120
Vancouver, WA 98684-3508

Walla Walla
(509) 527-4437
FAX: (509) 527-4486
Attention: Safety and Health
TDD: (509) 527-4172
1815 Portland Avenue, Suite 2
Walla Walla, WA 99362-2246

Yakima
(509) 454-3700
Toll-free 1-800-354-5423
FAX: (509) 454-3710
TDD: (509) 454-3741
Attention: Safety and Health
15 W. Yakima Avenue, Suite 100
Yakima, WA 98902-3480

Requesting Information

if you are requesting	*Then:*
An appeal of a WISHA Citation and Notice	**Mail requests to:** Department of Labor and Industries PO Box 44604 Olympia, Washington 98504-4604 **Fax requests to:** (360) 902-5581
Copies of a WISHA Citation and Notice	**Employee representative** should mail form F418-023-000 (Request for Copy of Citation and Notice) to: Department of Labor and Industries PO Box 44600 Olympia, Washington 98504-4600 **Individual employees** should mail of fax their request to: Department of Labor and Industries Public Disclosure PO Box 44632 Olympia, Washington 98504-4632 **Fax requests to:** (360) 902-5529
Material Safety Data Sheets (SDSs)	**Mail requests to:** Department of Labor and Industries Right to Know Program PO Box 44610 Olympia, Washington 98504-4610
Inspection Reports	**Mail request to:** Department of Labor and Industries Public Disclosure PO Box 44632 Olympia, Washington 98504-4632

Statutory Authorities for the Core Rules Chapter 296-800 WAC

WAC

296-800-099 Definitions.

Statutory Authority: RCW 49.17.010, .040, .050, and .060. 20-12-091 (Order 19-05) § 296-800-099, filed 06/02/2020, effective 10/01/2020. RCW 49.17.010, .040, .050, .060. 18-22-116 (Order 1628) § 296-800-099, filed 11/06/2018, effective 12/07/2018. Statutory Authority: RCW 49.17.010, .040, .050, and .060. 14-07-086 (Order 13-08), § 296-800-370, filed 03/18/14, effective 05/01/14. Statutory Authority: RCW 49.17.010, .040, .050, and .060. 12-24-071 (Order 12-20), § 296-800-370, filed 12/04/12, effective 01/04/13. Statutory Authority: RCW 49.17.010, 040, .050, and .060. 09-01-058 (Order 08-27), § 296-27-00105, filed 12/23/08, effective 03/01/09. Statutory Authority: RCW 49.17.010, 49.17.040, 49.17.050, and 49.17.060. 03-18-090 (Order 03-15), § 296-800-370, filed 9/2/03, effective 11/1/03. Statutory Authority: RCW 49.17.010,[49.17].040 , and [49.17].050. 02-16-047 (Order 02-02), § 296-800-370, filed 8/1/02, effective 10/1/02; 01-23-060 (Order 01-29), § 296-800-370, filed 11/20/01, effective 12/1/01; 01-11-038 (Order 99-36), § 296-800-370, filed 5/9/01, effective 9/1/01.]

296-800-100 Introduction.

[Statutory Authority: RCW 49.17.010, .040, .050, .060. 18-22-116 (Order 1628) § 296-800-100, filed 11/06/2018, effective 12/07/2018. Statutory Authority: RCW 49.17.010, [49.17].040, and[49.17].050 . 01-23-060 (Order 01-29), § 296-800-100, filed 11/20/01, effective 12/1/01; 01-11-038, § 296-800-100, filed 5/9/01, effective 9/1/01.]

296-800-110 Employer responsibilities: Safe workplace.

[Statutory Authority: RCW 49.17.010, .040, .050, .060. 18-22-116 (Order 1628) § 296-800-110, filed 11/06/2018, effective 12/07/2018. Statutory Authority: RCW 49.17.010, 49.17.040, 49.17.050, and 49.17.060. 03-18-090 (Order 03-15),

§ 296-800-110, filed 9/2/03, effective 11/1/03. Statutory Authority: RCW 49.17.010,[49.17].040 , and [49.17].050. 02-16-047 (Order 02-02), § 296-800-110, filed 8/1/02, effective 10/1/02; 01-23-060 (Order 01-29), § 296-800-110, filed 11/20/01, effective 12/1/01; 01-11-038(Order 99-36), § 296-800-110, filed 5/9/01, effective 9/1/01.]

296-800-11005 Provide a workplace free from recognized hazards.

[Statutory Authority: RCW 49.17.010, .040, .050, .060. 18-22-116 (Order 1628) § 296-800-11005, filed 11/06/2018, effective 12/07/2018. Statutory Authority: RCW 49.17.010, [49.17].040, and[49.17].050 . 01-23-060 (Order 01-29), § 296-800-11005, filed 11/20/01, effective 12/1/01; 01-11-038 Order 99-36), § 296-800-11005, filed 5/9/01, effective 9/1/01.]

296-800-11010 Provide and use means to make your workplace safe.

[Statutory Authority: RCW 49.17.010, .040, .050, .060. 18-22-116 (Order 1628) § 296-800-11010, filed 11/06/2018, effective 12/07/2018. Statutory Authority: RCW 49.17.010, [49.17].040, and[49.17].050 . 01-11-038 (Order 99-36), § 296-800-11010, filed 5/9/01, effective 9/1/01.]

296-800-11015 Prohibit employees from entering, or being in, any workplace that is not safe.

[Statutory Authority: RCW 49.17.010, .040, .050, .060. 18-22-116 (Order 1628) § 296-800-11015, filed 11/06/2018, effective 12/07/2018. Statutory Authority: RCW 49.17.010, [49.17].040, and[49.17].050 . 01-11-038 (Order 99-36), § 296-800-11015, filed 5/9/01, effective 9/1/01.]

296-800-11020 Construct your workplace so it is safe.

[Statutory Authority: RCW 49.17.010, .040, .050, .060. 18-22-116 (Order 1628) § 296-800-110020, filed 11/06/2018, effective 12/07/2018. Statutory Authority: RCW 49.17.010, [49.17].040, and[49.17].050 . 01-23-060 Order 01-29), § 296-800-11020, filed 11/20/01, effective 12/1/01; 01-11-038 (Order 99-36), § 296-800-11020, filed 5/9/01, effective 9/1/01.]

296-800-11025 Prohibit alcohol and narcotics from your workplace.

[Statutory Authority: RCW 49.17.010, .040, .050, .060. 18-22-116 (Order 1628) § 296-800-11025, filed 11/06/2018, effective 12/07/2018. Statutory Authority: RCW 49.17.010, [49.17].040, and[49.17].050 . 01-11-038 (Order 99-36), § 296-800-11025, filed 5/9/01, effective 9/1/01.]

296-800-11030 Prohibit employees from using tools and equipment that are not safe.

[Statutory Authority: RCW 49.17.010, .040, .050, .060. 18-22-116 (Order 1628) § 296-800-11030, filed 11/06/2018, effective 12/07/2018. Statutory Authority: RCW 49.17.010, 49.17.040, 49.17.050, and 49.17.060. 03-18-090 (Order 03-15), § 296-800-11030, filed 9/2/03, effective 11/1/03. Statutory Authority: RCW 49.17.010,[49.17].040 , and [49.17].050. 01-11-038 (Order 99-36), § 296-800-11030, filed 5/9/01, effective 9/1/01.]

296-800-11035 Establish, supervise, and enforce rules that lead to a safe and healthy work environment that are effective in practice.

[Statutory Authority: RCW 49.17.010, .040, .050, .060. 18-22-116 (Order 1628) § 296-800-11035, filed 11/06/2018, effective 12/07/2018. Statutory Authority: RCW 49.17.010, [49.17].040, and[49.17].050 . 01-11-038 (Order 99-36), § 296-800-11035, filed 5/9/01, effective 9/1/01.]

296-800-11040 Control chemical agents.

[Statutory Authority: RCW 49.17.010, .040, .050, .060. 18-22-116 (Order 1628) § 296-800-11040, filed 11/06/2018, effective 12/07/2018. Statutory Authority: RCW 49.17.010, [49.17].040, and[49.17].050 . 02-16-047 (Order 02-02), § 296-800-11040, filed 8/1/02, effective 10/1/02.]

296-800-11045 Protect employees from biological agents.

[Statutory Authority: RCW 49.17.010, .040, .050, .060. 18-22-116 (Order 1628) § 296-800-11045, filed 11/06/2018, effective 12/07/2018. Statutory Authority: RCW 49.17.010, .040, .050, and .060. 04-18-080 (Order 04-09), § 296-800-11045, filed 08/31/04, effective 11/01/04. Statutory Authority: RCW 49.17.010, [49.17].040, and[49.17].050 . 02-16-047 (Order 02-02), § 296-800-11045, filed 8/1/02, effective 10/1/02.]

296-800-120 Rule.

[Statutory Authority: RCW 49.17.010, .040, .050, .060. 18-22-116 (Order 1628) § 296-800-120, filed 11/06/2018, effective 12/07/2018. Statutory Authority: RCW 49.17.010, [49.17].040, and[49.17].050 . 01-23-060 (Order 01-29), § 296-800-120, filed 11/20/01, effective 12/1/01; 01-11-038 (Order 99-36), § 296-800-120, filed 5/9/01, effective 9/1/01.]

296-800-12005 Employee responsibilities.

[Statutory Authority: RCW 49.17.010, .040, .050, .060. 18-22-116 (Order 1628) § 296-800-12005, filed 11/06/2018, effective 12/07/2018. Statutory Authority: RCW 49.17.010, [49.17].040, and[49.17].050 . 01-23-060 (Order 01-29), § 296-800-12005, filed 11/20/01, effective 12/1/01; 01-11-038 (Order 99-36), § 296-800-12005, filed 5/9/01, effective 9/1/01.]

296-800-130 Safety committees and safety meetings.

[Statutory Authority: RCW 49.17.010, .040, .050, .060. 18-22-116 (Order 1628) § 296-800-130, filed 11/06/2018, effective 12/07/2018. Statutory Authority: RCW 49.17.010, [49.17].040, and[49.17].050 . 02-16-047 (Order 02-02), § 296-800-130, filed 8/1/02, effective 10/1/02; 01-11-038 (Order 99-36), § 296-800-130, filed 5/9/01, effective 9/1/01.]

296-800-13020 Establish and conduct safety committees.

[Statutory Authority: RCW 49.17.010, .040, .050, .060. 18-22-116 (Order 1628) § 296-800-13020, filed 11/06/2018, effective 12/07/2018. Statutory Authority: RCW 49.17.010, [49.17].040, and[49.17].050 . 02-16-047 (Order 02-02), § 296-800-13020, filed 8/1/02, effective 10/1/02.]

296-800-13025 Follow these rules to conduct safety meetings.

[Statutory Authority: RCW 49.17.010, .040, .050, .060. 18-22-116 (Order 1628) § 296-800-13025, filed 11/06/2018, effective 12/07/2018. Statutory Authority: RCW 49.17.010, [49.17].040, and[49.17].050 . 02-16-047 (Order 02-02), § 296-800-13025, filed 8/1/02, effective 10/1/02.]

296-800-140 Accident prevention program.

[Statutory Authority: RCW 49.17.010, .040, .050, .060. 18-22-116 (Order 1628) § 296-800-140, filed 11/06/2018, effective 12/07/2018. Statutory Authority: RCW 49.17.010, [49.17].040, and[49.17].050 . 01-11-038 (Order 99.39), § 296-800-140, filed 5/9/01, effective 9/1/01.]

296-800-14005 Develop a formal, written accident prevention program.

[Statutory Authority: RCW 49.17.010, .040, .050, .060. 18-22-116 (Order 1628) § 296-800-14005, filed 11/06/2018, effective 12/07/2018. Statutory Authority: RCW 49.17.010, [49.17].040, and[49.17].050 . 01-11-038 (Order 99-36), § 296-800-14005, filed 5/9/01, effective 9/1/01.]

296-800-14020 Develop, supervise, implement, and enforce safety and health training programs that are effective in practice.

[Statutory Authority: RCW 49.17.010, .040, .050, .060. 18-22-116 (Order 1628) § 296-800-14020, filed 11/06/2018, effective 12/07/2018. Statutory Authority: RCW 49.17.010, [49.17].040, and[49.17].050 . 01-11-038 (Order 99-36), § 296-800-14020, filed 5/9/01, effective 9/1/01.]

296-800-14025 Make sure your accident prevention program is effective in practice.

[Statutory Authority: RCW 49.17.010, .040, .050, .060. 18-22-116 (Order 1628) § 296-800-14025, filed 11/06/2018, effective 12/07/2018. Statutory Authority: RCW 49.17.010, [49.17].040, and[49.17].050 . 01-11-038 (Order 99-36), § 296-800-14025, filed 5/9/01, effective 9/1/01.]

296-800-150 First aid.

[Statutory Authority: RCW 49.17.010, .040, .050, .060. 18-22-116 (Order 1628) § 296-800-150, filed 11/06/2018, effective 12/07/2018. Statutory Authority: RCW 49.17.010, .040, .050, and .060. 04-07-160 (Order 03-31), § 296-800-150, filed 03/23/04, effective 05/01/04. Statutory Authority: RCW 49.17.010, [49.17].040, and[49.17].050 . 02-16-047 (Order 02-02), § 296-800-150, filed 8/1/02, effective 10/1/02; 01-11-038 (Order 99-36), § 296-800-150, filed 5/9/01, effective 9/1/01.]

296-800-15005 Make sure that first-aid trained personnel are available to provide quick and effective first-aid.

[Statutory Authority: RCW 49.17.010, .040, .050, .060. 18-22-116 (Order 1628) § 296-800-15005, filed 11/06/2018, effective 12/07/2018. Statutory Authority: RCW 49.17.010, .040, .050, and .060. 04-07-160 (Order 03-31), § 296-800-15005, filed 03/23/04, effective 05/01/04. Statutory Authority: RCW 49.17.010, 49.17.040, 49.17.050, and 49.17.060. 03-09-110 (Order 02-29), § 296-800-15005, filed 4/22/03, effective 8/1/03. Statutory Authority: RCW 49.17.010,[49.17].040 , and [49.17].050. 01-23-060 (Order 01-29), § 296-800-15005, filed 11/20/01, effective 12/1/01; 01-11-038 (Order 99-36), § 296-800-15005, filed 5/9/01, effective 9/1/01.]

296-800-15020 Make sure appropriate first-aid supplies are readily available.

[Statutory Authority: RCW 49.17.010, .040, .050, .060. 18-22-116 (Order 1628) § 296-800-15020, filed 11/06/2018, effective 12/07/2018. Statutory Authority: RCW 49.17.010, [49.17].040, and[49.17].050 . 01-11-038 (Order 99-36), § 296-800-15020, filed 5/9/01, effective 9/1/01.]

296-800-15030 Make sure emergency washing facilities are functional and readily available.

[Statutory Authority: RCW 49.17.010, .040, .050, .060. 18-22-116 (Order 1628) § 296-800-15030, filed 11/06/2018, effective 12/07/2018. Statutory Authority: RCW 49.17.010, .040, .050, and .060. 14-07-086 (Order 13-08), § 296-800-15030, filed 03/18/14, effective 05/01/14. Statutory Authority: RCW 49.17.010, [49.17].040, and[49.17].050 . 02-16-047 (Order 02-02), § 296-800-15030, filed 8/1/02, effective 10/1/02.]

296-800-15035 Inspect and activate your emergency washing facilities.

[Statutory Authority: RCW 49.17.010, .040, .050, .060. 18-22-116 (Order 1628) § 296-800-15035, filed 11/06/2018, effective 12/07/2018. Statutory Authority: RCW 49.17.010, [49.17].040, and[49.17].050 . 02-16-047 (Order 02-02), § 296-800-15035, filed 8/1/02, effective 10/1/02.]

296-800-15040 Make sure supplemental flushing equipment provides sufficient water.

[Statutory Authority: RCW 49.17.010, .040, .050, .060. 18-22-116 (Order 1628) § 296-800-15040, filed 11/06/2018, effective 12/07/2018. Statutory Authority: RCW 49.17.010, [49.17].040, and[49.17].050 . 02-16-047 (Order 02-02), § 296-800-15040, filed 8/1/02, effective 10/1/02.]

296-800-160 Personal protective equipment (PPE).

[Statutory Authority: RCW 49.17.010, .040, .050, .060. 18-22-116 (Order 1628) § 296-800-160, filed 11/06/2018, effective 12/07/2018. Statutory Authority: RCW 49.17.010, [49.17].040, and[49.17].050 . 01-23-060 (Order 01-29), § 296-800-160, filed 11/20/01, effective 12/1/01; 01-11-038, § 296-800-160, filed 5/9/01, effective 9/1/01. Statutory Authority: RCW 49.17.010, .040, .050, and .060. 05-03-093 (Order 04-41), § 296-800-160, filed 01/18/05, effective 03/01005.]

296-800-16005 Do a hazard assessment for PPE.

[Statutory Authority: RCW 49.17.010, .040, .050, .060. 18-22-116 (Order 1628) § 296-800-16005, filed 11/06/2018, effective 12/07/2018. Statutory Authority: RCW 49.17.010, [49.17].040, and[49.17].050 . 01-11-038 (Order 99-36), § 296-800-16005, filed 5/9/01, effective 9/1/01.]

296-800-16010 Document your hazard assessment for PPE

[Statutory Authority: RCW 49.17.010, .040, .050, .060. 18-22-116 (Order 1628) § 296-800-16010, filed 11/06/2018, effective 12/07/2018. Statutory Authority: RCW 49.17.010, [49.17].040, and[49.17].050 . 01-11-038 (Order 99-36), § 296-800-16010, filed 5/9/01, effective 9/1/01.]

296-800-16015 Select appropriate PPE for your employees.

[Statutory Authority: RCW 49.17.010, .040, .050, .060. 18-22-116 (Order 1628) § 296-800-16015, filed 11/06/2018, effective 12/07/2018. Statutory Authority: RCW 49.17.010, [49.17].040, and[49.17].050 . 01-23-060 (Order 01-29), § 296-800-16015, filed 11/20/01, effective 12/1/01; 01-11-038 (Order 99-36), § 296-800-16015, filed 5/9/01, effective 9/1/01.]

[Statutory Authority: RCW 49.17.010, 49.17.040, 49.17.050, 49.17.060. WSR 09-05-071, § 296-800-16020, filed 2/17/09, effective 4/1/09. Statutory Authority: RCW 49.17.010, [49.17].040, and [49.17].050. WSR 01-23-060, § 296-800-16020, filed 11/20/01, effective 12/1/01; WSR 01-11-038, § 296-800-16020, filed 5/9/01, effective 9/1/01.]

296-800-16025 Train your employees to use PPE.

[Statutory Authority: RCW 49.17.010, .040, .050, .060. 18-22-116 (Order 1628) § 296-800-16025, filed 11/06/2018, effective 12/07/2018. Statutory Authority: RCW 49.17.010, [49.17].040, and[49.17].050 . 01-23-060 (Order 01-29), § 296-800-16025, filed 11/20/01, effective 12/1/01; 01-11-038 (Order 99-36), § 296-800-16025, filed 5/9/01, effective 9/1/01.]

296-800-16030 Retrain employees to use PPE, if necessary.

[Statutory Authority: RCW 49.17.010, .040, .050, .060. 18-22-116 (Order 1628) § 296-800-16030, filed 11/06/2018, effective 12/07/2018. Statutory Authority: RCW 49.17.010, [49.17].040, and[49.17].050 . 01-11-038 (Order 99-36), § 296-800-16030, filed 5/9/01, effective 9/1/01.]

296-800-16035 Document PPE training.

[Statutory Authority: RCW 49.17.010, .040, .050, .060. 18-22-116 (Order 1628) § 296-800-16035, filed 11/06/2018, effective 12/07/2018. Statutory Authority: RCW 49.17.010, [49.17].040, and[49.17].050 . 01-11-038 (Order 99-36), § 296-800-16035, filed 5/9/01, effective 9/1/01.]

296-800-16040 Require your employees to use necessary PPE on the job.

[Statutory Authority: RCW 49.17.010, .040, .050, .060. 18-22-116 (Order 1628) § 296-800-16040, filed 11/06/2018, effective 12/07/2018. Statutory Authority: RCW 49.17.010, [49.17].040, and[49.17].050 . 01-11-038 (Order 99-36), § 296-800-16040, filed 5/9/01, effective 9/1/01.]

296-800-16045 Keep PPE in a safe and good condition.

[Statutory Authority: RCW 49.17.010, .040, .050, .060. 18-22-116 (Order 1628) § 296-800-16045, filed 11/06/2018, effective 12/07/2018. Statutory Authority: RCW 49.17.010, [49.17].040, and[49.17].050 . 01-11-038 (Order 99-36), § 296-800-16045, filed 5/9/01, effective 9/1/01.]

296-800-16050 Make sure your employees use appropriate eye and face protection.

[Statutory Authority: RCW 49.17.010, .040, .050, .060. 18-22-116 (Order 1628) § 296-800-16050, filed 11/06/2018, effective 12/07/2018. Statutory Authority: RCW 49.17.010, .040, .050, and .060. 10-09-088 (Order 10-04), § 296-800-16050, filed 04/20/10, effective 06/01/10. Statutory Authority: RCW 49.17.010, [49.17].040, and[49.17].050 . 02-16-047 (Order 02-02), § 296-800-16050, filed 8/1/02, effective 10/1/02; 01-23-060 (Order 01-29), § 296-800-16050, filed 11/20/01, effective 12/1/01; 01-11-038 (Order 99-36), § 296-800-16050, filed 5/9/01, effective 9/1/01.]

296-800-16055 Make sure your employees use appropriate head protection.

[Statutory Authority: RCW 49.17.010, .040, .050, .060. 18-22-116 (Order 1628) § 296-800-16055, filed 11/06/2018, effective 12/07/2018. Statutory Authority: RCW 49.17.010, .040, .050, and .060. 14-07-086 (Order 13-08), § 296-800-16055, filed 03/18/14, effective 05/01/14. Statutory Authority: RCW 49.17.010, .040, .050, and .060. 10-09-088 (Order 10-04), § 296-800-16055, filed 04/20/10, effective 06/01/10. Statutory Authority: RCW 49.17.010, [49.17].040, and[49.17].050 . 01-11-038 (Order 99-36), § 296-800-16055, filed 5/9/01, effective 9/1/01.]

296-800-16060 Make sure your employees use appropriate foot protection.

[Statutory Authority: RCW 49.17.010, .040, .050, .060. 18-22-116 (Order 1628) § 296-800-16060, filed 11/06/2018, effective 12/07/2018. Statutory Authority: RCW 49.17.010, .040, .050, and .060. 10-09-088 (Order 10-04), § 296-800-16060, filed 04/20/10, effective 06/01/10. Statutory Authority: RCW 49.17.010, [49.17].040, and[49.17].050 . 01-11-038 (99-36), § 296-800-16060, filed 5/9/01, effective 9/1/01.]

296-800-16065 Make sure your employees use appropriate hand protection.

[Statutory Authority: RCW 49.17.010, .040, .050, .060. 18-22-116 (Order 1628) § 296-800-16065, filed 11/06/2018, effective 12/07/2018. Statutory Authority: RCW 49.17.010, [49.17].040, and[49.17].050 . 01-11-038 (Order 99-36), § 296-800-16065, filed 5/9/01, effective 9/1/01.]

296-800-16070 Make sure your employees are protected from drowning.

[Statutory Authority: RCW 49.17.010, .040, .050, .060. 18-22-116 (Order 1628) § 296-800-16070, filed 11/06/2018, effective 12/07/2018. Statutory Authority: RCW 49.17.010, [49.17].040, and[49.17].050 . 02-16-047 (Order 020-02), § 296-800-16070, filed 8/1/02, effective 10/1/02; 01-11-038 (Order 99-36), § 296-800-16070, filed 5/9/01, effective 9/1/01.]

296-800-180 SDSs as exposure records.

[Statutory Authority: RCW 49.17.010, .040, .050, .060. 18-22-116 (Order 1628) § 296-800-180, filed 11/06/2018, effective 12/07/2018. Statutory Authority: RCW 49.17.010, .040, .050, and .060. 17-02-066 (Order 16-30), § 296-800-180, filed 01/03/2017, effective 02/03/2017. Statutory Authority: RCW 49.17.010, .040, .050, and .060. 04-10-026 (Order 03-04), § 296-800-180, filed 04/27/04, effective 08/01/04. Statutory Authority: RCW 49.17.010, [49.17].040, and[49.17].050 . 01-23-060 (Order 01-29), § 296-800-180, filed 11/20/01, effective 12/1/01; 01-11-038 (Order 99-36), § 296-800-180, filed 5/9/01, effective 9/1/01.]

296-800-18005 Preserve exposure records for at least thirty years.

[Statutory Authority: RCW 49.17.010, .040, .050, .060. 18-22-116 (Order 1628) § 296-800-18005, filed 11/06/2018, effective 12/07/2018. Statutory Authority: RCW 49.17.010, .040, .050, and .060. 17-02-066 (Order 16-30), § 296-800-18005, filed 01/03/2017, effective 02/03/2017. Statutory Authority: RCW 49.17.010, [49.17].040, and[49.17].050 . 01-11-038 (Order 99-36), § 296-800-18005, filed 5/9/01, effective 9/1/01.]

296-800-18010 Inform current employees of exposure records.

[Statutory Authority: RCW 49.17.010, .040, .050, .060. 18-22-116 (Order 1628) § 296-800-18010, filed 11/06/2018, effective 12/07/2018. Statutory Authority: RCW 49.17.010, .040, .050, and .060. 17-02-066 (Order 16-30), § 296-800-18010, filed 01/03/2017, effective 02/03/2017. Statutory Authority: RCW 49.17.010, [49.17].040, and[49.17].050 . 02-16-047 (Order 02-02), § 296-800-18010, filed 8/1/02, effective 10/1/02; 01-11-038 (Order 99-36), § 296-800-18010, filed 5/9/01, effective 9/1/01.]

296-800-18015 Provide access to exposure records.

[Statutory Authority: RCW 49.17.010, .040, .050, .060. 18-22-116 (Order 1628) § 296-800-18015, filed 11/06/2018, effective 12/07/2018. Statutory Authority: RCW 49.17.010, .040, .050, and .060. 17-02-066 (Order 16-30), § 296-800-18015, filed 01/03/2017, effective 02/03/2017. Statutory Authority: RCW 49.17.010, [49.17].040, and[49.17].050 . 02-16-047 (Order 02-02), § 296-800-18015, filed 8/1/02, effective 10/1/02; 01-23-060 (Order 01-29), § 296-800-18015, filed 11/20/01, effective 12/1/01; 01-11-038 (Order 99-36), § 296-800-18015, filed 5/9/01, effective 9/1/01.]

296-800-18020 Transfer records when ceasing to do business.

[Statutory Authority: RCW 49.17.010, .040, .050, .060. 18-22-116 (Order 1628) § 296-800-18020, filed 11/06/2018, effective 12/07/2018. Statutory Authority: RCW 49.17.010, .040, .050, and .060. 17-02-066 (Order 16-30), § 296-800-18020, filed 01/03/2017, effective 02/03/2017. Statutory Authority: RCW 49.17.010, [49.17].040, and[49.17].050 . 01-23-060 (Order 01-29), § 296-800-18020, filed 11/20/01, effective 12/1/01; 01-11-038 (Order 99-36), § 296-800-18020, filed 5/9/01, effective 9/1/01.]

296-800-190 Safety bulletin board.

[Statutory Authority: RCW 49.17.010, .040, .050, .060. 18-22-116 (Order 1628) § 296-800-190, filed 11/06/2018, effective 12/07/2018. Statutory Authority: RCW 49.17.010, [49.17].040, and[49.17].050 . 01-11-038 (Order 99-36), § 296-800-190, filed 5/9/01, effective 9/1/01.]

296-800-19005 Provide a safety bulletin board in your workplace.

[Statutory Authority: RCW 49.17.010, .040, .050, .060. 18-22-116 (Order 1628) § 296-800-19005, filed 11/06/2018, effective 12/07/2018. Statutory Authority: RCW 49.17.010, [49.17].040, and[49.17].050 . 01-11-038 (Order 99-36), § 296-800-19005, filed 5/9/01, effective 9/1/01.]

296-800-200 Job safety and health law poster.

[Statutory Authority: RCW 49.17.010, .040, .050, .060. 18-22-116 (Order 1628) § 296-800-200, filed 11/06/2018, effective 12/07/2018. Statutory Authority: RCW 49.17.010, [49.17].040, and[49.17].050 . 01-11-038 (Order 99-36), § 296-800-200, filed 5/9/01, effective 9/1/01.]

296-800-20005 Post and keep a job safety and health law poster in your workplace.

[Statutory Authority: RCW 49.17.010, .040, .050, .060. 18-22-116 (Order 1628) § 296-800-20005, filed 11/06/2018, effective 12/07/2018. Statutory Authority: RCW 49.17.010, [49.17].040, and[49.17].050 . 02-16-047 (Order 02-02), § 296-800-20005, filed 8/1/02, effective 10/1/02; 01-23-060 (Order 01-29), § 296-800-20005, filed 11/20/01, effective 12/1/01; 01-11-038 (Order 99-36), § 296-800-20005, filed 5/9/01, effective 9/1/01.]

296-800-210 Lighting.

[Statutory Authority: RCW 49.17.010, .040, .050, .060. 18-22-116 (Order 1628) § 296-800-210, filed 11/06/2018, effective 12/07/2018. Statutory Authority: RCW 49.17.010, [49.17].040, and[49.17].050 . 01-11-038 (Order 99-36), § 296-800-210, filed 5/9/01, effective 9/1/01.]

296-800-21005 Provide and maintain adequate lighting.

[Statutory Authority: RCW 49.17.010, .040, .050, .060. 18-22-116 (Order 1628) § 296-800-21005, filed 11/06/2018, effective 12/07/2018. Statutory Authority: RCW 49.17.010, [49.17].040, and[49.17].050 . 01-23-060 (Order 01-29), § 296-800-21005, filed 11/20/01, effective 12/1/01; 01-11-038 (Order 99-36), § 296-800-21005, filed 5/9/01, effective 9/1/01.]

296-880-220 Housekeeping, drainage, and storage.

[Statutory Authority: RCW 49.17.010, .040, .050, .060. 18-22-116 (Order 1628) § 296-800-220, filed 11/06/2018, effective 12/07/2018. Statutory Authority: RCW 49.17.010, [49.17].040, and[49.17].050 . 01-11-038 (Order 99-36), § 296-800-220, filed 5/9/01, effective 9/1/01.]

296-800-22005 Keep your workplace clean.

Sep-2001

[Statutory Authority: RCW 49.17.010, .040, .050, .060. 18-22-116 (Order 1628) § 296-800-22005, filed 11/06/2018, effective 12/07/2018. Statutory Authority: RCW 49.17.010, [49.17].040, and[49.17].050 . 01-11-038 (Order 99-36), § 296-800-22005, filed 5/9/01, effective 9/1/01.]

296-800-22010 Sweep and clean your workplace to minimize dust.

[Statutory Authority: RCW 49.17.010, .040, .050, .060. 18-22-116 (Order 1628) § 296-800-22010, filed 11/06/2018, effective 12/07/2018. Statutory Authority: RCW 49.17.010, [49.17].040, and[49.17].050 . 01-11-038 (Order 99-36), § 296-800-22010, filed 5/9/01, effective 9/1/01.]

296-800-22015 Keep your workplace free of obstacles that interfere with cleaning.

[Statutory Authority: RCW 49.17.010, .040, .050, .060. 18-22-116 (Order 1628) § 296-800-22015, filed 11/06/2018, effective 12/07/2018. Statutory Authority: RCW 49.17.010, [49.17].040, and[49.17].050 . 01-11-038 (Order 99-36), § 296-800-22015, filed 5/9/01, effective 9/1/01.]

296-800-22020 Control pests in your workplace.

[Statutory Authority: RCW 49.17.010, .040, .050, .060. 18-22-116 (Order 1628) § 296-800-22020, filed 11/06/2018, effective 12/07/2018. Statutory Authority: RCW 49.17.010, [49.17].040, and[49.17].050 . 01-23-060 (Order 01-29), § 296-800-22020, filed 11/20/01, effective 12/1/01; 01-11-038 (Order 99-36), § 296-800-22020, filed 5/9/01, effective 9/1/01.]

296-800-22022 Make sure floors are maintained in a safe condition.

[Statutory Authority: RCW 49.17.010, .040, .050, .060. 18-22-116 (Order 1628) § 296-800-22022, filed 11/06/2018, effective 12/07/2018. Statutory Authority: RCW 49.17.010, [49.17].040, and[49.17].050 . 01-11-038 (Order 99-36), § 296-800-22022, filed 5/9/01, effective 9/1/01.]

296-800-22025 Keep your workroom floors dry, when practical.

[Statutory Authority: RCW 49.17.010, .040, .050, .060. 18-22-116 (Order 1628) § 296-800-22025, filed 11/06/2018, effective 12/07/2018. Statutory Authority: RCW 49.17.010, [49.17].040, and[49.17].050 . 01-11-038 (Order 99-36), § 296-800-22025, filed 5/9/01, effective 9/1/01.]

296-800-22030 Provide proper drainage.

[Statutory Authority: RCW 49.17.010, .040, .050, .060. 18-22-116 (Order 1628) § 296-800-22030, filed 11/06/2018, effective 12/07/2018. Statutory Authority: RCW 49.17.010, [49.17].040, and[49.17].050 . 01-11-038 (Order 99-36), § 296-800-22030, filed 5/9/01, effective 9/1/01.]

296-800-22035 Store things safely.

[Statutory Authority: RCW 49.17.010, .040, .050, .060. 18-22-116 (Order 1628) § 296-800-22035, filed 11/06/2018, effective 12/07/2018. Statutory Authority: RCW 49.17.010, [49.17].040, and[49.17].050 . 01-11-038 (Order 99-36), § 296-800-22035, filed 5/9/01, effective 9/1/01.]

296-800-22040 Control vegetation in your storage areas.

[Statutory Authority: RCW 49.17.010, .040, .050, .060. 18-22-116 (Order 1628) § 296-800-22040, filed 11/06/2018, effective 12/07/2018. Statutory Authority: RCW 49.17.010, [49.17].040, and[49.17].050 . 01-11-038 (Order 99-36), § 296-800-22040, filed 5/9/01, effective 9/1/01.]

296-800-230 Sanitation and hygiene facilities and procedures.

[Statutory Authority: RCW 49.17.010, .040, .050, .060. 18-22-116 (Order 1628) § 296-800-230, filed 11/06/2018, effective 12/07/2018. Statutory Authority: RCW 49.17.010, 49.17.040, 49.17.050, and 49.17.060. 03-18-090 (Order 03-15), § 296-800-230, filed 9/2/03, effective 11/1/03. Statutory Authority: RCW 49.17.010,[49.17].040 , and [49.17].050. 01-23-060 (Order 01-29), § 296-800-230, filed 11/20/01, effective 12/1/01; 01-11-038 (Order 99-36), § 296-800-230, filed 5/9/01, effective 9/1/01.]

296-800-23005 Provide safe drinking (potable) water in your workplace.

[Statutory Authority: RCW 49.17.010, .040, .050, .060. 18-22-116 (Order 1628) § 296-800-23005, filed 11/06/2018, effective 12/07/2018. Statutory Authority: RCW 49.17.010, 49.17.040, 49.17.050, and 49.17.060. 03-18-090 (Order 03-15), § 296-800-23005, filed 9/2/03, effective 11/1/03. Statutory Authority: RCW 49.17.010,[49.17].040 , and [49.17].050. 01-23-060 (Order 01-29), § 296-800-23005, filed 11/20/01, effective 12/1/01; 01-11-038 (Order 99-36), § 296-800-23005, filed 5/9/01, effective 9/1/01.]

296-800-23010 Clearly mark the water outlets that are not fit for drinking (nonpotable).

[Statutory Authority: RCW 49.17.010, .040, .050, .060. 18-22-116 (Order 1628) § 296-800-23010, filed 11/06/2018, effective 12/07/2018. Statutory Authority: RCW 49.17.010, 49.17.040, 49.17.050, and 49.17.060. 03-18-090 (Order 03-15), § 296-800-23010, filed 9/2/03, effective 11/1/03. Statutory Authority: RCW 49.17.010,[49.17].040 , and [49.17].050. 02-16-047 (Order 02-02), § 296-800-23010, filed 8/1/02, effective 10/1/02; 01-23-060 (Order 01-29), § 296-800-23010, filed 11/20/01, effective 12/1/01; 01-11-038 (Order 99-36), § 296-800-23010, filed 5/9/01, effective 9/1/01.]

296-800-23015 Make sure that systems delivering not-fit-for-drinking (nonpotable) water prevents backflow into drinking water systems.

[Statutory Authority: RCW 49.17.010, .040, .050, .060. 18-22-116 (Order 1628) § 296-800-23015, filed 11/06/2018, effective 12/07/2018. Statutory Authority: RCW 49.17.010, [49.17].040, and[49.17].050 . 01-11-038 (Order 99-36), § 296-800-23015, filed 5/9/01, effective 9/1/01.]

296-800-23020 Provide bathrooms for your employees.

[Statutory Authority: RCW 49.17.010, .040, .050, .060. 18-22-116 (Order 1628) § 296-800-230020, filed 11/06/2018, effective 12/07/2018. Statutory Authority: RCW 49.17.010, 49.17.040, 49.17.050, and 49.17.060. 03-18-090 (Order 03-15), § 296-800-23020, filed 9/2/03, effective 11/1/03. Statutory Authority: RCW 49.17.010,[49.17].040 , and [49.17].050. 02-16-047 (Order 02-02), § 296-800-23020, filed 8/1/02, effective 10/1/02; 01-11-038 (Order 99-36), § 296-800-23020, filed 5/9/01, effective 9/1/01.]

296-800-23025 Provide convenient, clean washing facilities.

[Statutory Authority: RCW 49.17.010, .040, .050, .060. 18-22-116 (Order 1628) § 296-800-23025, filed 11/06/2018, effective 12/07/2018. Statutory Authority: RCW 49.17.010, .040, .050, and .060. 12-24-071 (Order 12-20), § 296-800-23025, filed 12/04/12, effective 01/04/13. Statutory Authority: RCW 49.17.010, 49.17.040, 49.17.050, and 49.17.060. 03-18-090 (Order 03-15), § 296-800-23025, filed 9/2/03, effective 11/1/03. Statutory Authority: RCW 49.17.010,[49.17].040 , and [49.17].050. 01-23-060 (Order 01-29), § 296-800-23025, filed 11/20/01, effective 12/1/01; 01-11-038 (Order 99-36), § 296-800-23025, filed 5/9/01, effective 9/1/01.]

296-800-23040 Make sure eating areas are safe and healthy.

[Statutory Authority: RCW 49.17.010, .040, .050, .060. 18-22-116 (Order 1628) § 296-800-23040, filed 11/06/2018, effective 12/07/2018. Statutory Authority: RCW 49.17.010, 49.17.040, 49.17.050, and 49.17.060. 03-18-090 (Order 03-15), § 296-800-23040, filed 9/2/03, effective 11/1/03.]

296-800-23045 Follow these requirements if you provide food service to your employees.

[Statutory Authority: RCW 49.17.010, .040, .050, .060. 18-22-116 (Order 1628) § 296-800-23045, filed 11/06/2018, effective 12/07/2018. Statutory Authority: RCW 49.17.010, 49.17.040, 49.17.050, and 49.17.060. 03-18-090 (Order 03-15), § 296-800-23045, filed 9/2/03, effective 11/1/03.]

296-800-23050 Dispose of garbage and waste safely.

[Statutory Authority: RCW 49.17.010, .040, .050, .060. 18-22-116 (Order 1628) § 296-800-23050, filed 11/06/2018, effective 12/07/2018. Statutory Authority: RCW 49.17.010, 49.17.040, 49.17.050, and 49.17.060. 03-18-090 (Order 03-15), § 296-800-23050, filed 9/2/03, effective 11/1/03.]

296-800-23055 Remove garbage and waste in a way that does not create a health hazard.

[Statutory Authority: RCW 49.17.010, .040, .050, .060. 18-22-116 (Order 1628) § 296-800-23055, filed 11/06/2018, effective 12/07/2018. Statutory Authority: RCW 49.17.010, 49.17.040, 49.17.050, and 49.17.060. 03-18-090 (Order 03-15), § 296-800-23055, filed 9/2/03, effective 11/1/03.]

296-800-23060 Provide a separate lunchroom if employees are exposed to toxic substances if they are allowed to eat and drink on the job site.

[Statutory Authority: RCW 49.17.010, .040, .050, .060. 18-22-116 (Order 1628) § 296-800-23060, filed 11/06/2018, effective 12/07/2018. Statutory Authority: RCW 49.17.010, 49.17.040, 49.17.050, and 49.17.060. 03-18-090 (Order 03-15), § 296-800-23060, filed 9/2/03, effective 11/1/03.]

296-800-23065 Provide showers when required for employees working with chemicals.

[Statutory Authority: RCW 49.17.010, .040, .050, .060. 18-22-116 (Order 1628) § 296-800-23065, filed 11/06/2018, effective 12/07/2018. Statutory Authority: RCW 49.17.010, 49.17.040, 49.17.050, and 49.17.060. 03-18-090 (Order 03-15), § 296-800-23065, filed 9/2/03, effective 11/1/03.]

296-800-23070 Provide change rooms when required.

[Statutory Authority: RCW 49.17.010, .040, .050, .060. 18-22-116 (Order 1628) § 296-800-23070, filed 11/06/2018, effective 12/07/2018. Statutory Authority: RCW 49.17.010, 49.17.040, 49.17.050, and 49.17.060. 03-18-090 (Order 03-15), § 296-800-23070, filed 9/2/03, effective 11/1/03.]

296-800-23075 Make sure any work clothes you provide are dry.

[Statutory Authority: RCW 49.17.010, .040, .050, .060. 18-22-116 (Order 1628) § 296-800-23075, filed 11/06/2018, effective 12/07/2018. Statutory Authority: RCW 49.17.010, 49.17.040, 49.17.050, and 49.17.060. 03-18-090 (Order 03-15), § 296-800-23075, filed 9/2/03, effective 11/1/03.]

296-800-240 Environmental tobacco smoke in the office.

[Statutory Authority: RCW 49.17.010, .040, .050, .060. 18-22-116 (Order 1628) § 296-800-240, filed 11/06/2018, effective 12/07/2018. Statutory Authority: RCW 49.17.010, .040, .050, and .060. 06-22-023 (Order 06-26), § 296-800-240, filed 10/24/06, effective 12/01/06. Statutory Authority: RCW 49.17.010, [49.17].040, and[49.17].050 . 01-11-038 (Order 99-36), § 296-800-240, filed 5/9/01, effective 9/1/01.]

296-800-24005 Prohibit tobacco smoke in your office work environment.

[Statutory Authority: RCW 49.17.010, .040, .050, .060. 18-22-116 (Order 1628) § 296-800-24005, filed 11/06/2018, effective 12/07/2018. Statutory Authority: RCW 49.17.010, .040, .050, and .060. 06-22-023 (Order 06-26), § 296-800-24005, filed 10/24/06, effective 12/01/06. Statutory Authority: RCW 49.17.010, [49.17].040, and[49.17].050 . 01-11-038 (Order 99-36), § 296-800-24005, filed 5/9/01, effective 9/1/01.]

296-800-250 Stairs and stair railings.

[Statutory Authority: RCW 49.17.010, .040, .050, .060. 18-22-116 (Order 1628) § 296-800-250, filed 11/06/2018, effective 12/07/2018. Statutory Authority: RCW 49.17.010, [49.17].040, and[49.17].050 . 01-23-060 (Order 01-29), § 296-800-250, filed 11/20/01, effective 12/1/01; 01-11-038 (Order 99-36), § 296-800-250, filed 5/9/01, effective 9/1/01.]

296-800-25005 Provide fixed stairs where required.

[Statutory Authority: RCW 49.17.010, .040, .050, .060. 18-22-116 (Order 1628) § 296-800-25005, filed 11/06/2018, effective 12/07/2018. Statutory Authority: RCW 49.17.010, [49.17].040, and[49.17].050 . 01-23-060 (Order 01-29), § 296-800-25005, filed 11/20/01, effective 12/1/01; 01-11-038 (Order 99-36), § 296-800-25005, filed 5/9/01, effective 9/1/01.]

296-800-25010 Provide stairs that minimize hazards.

[Statutory Authority: RCW 49.17.010, .040, .050, .060. 18-22-116 (Order 1628) § 296-800-25010, filed 11/06/2018, effective 12/07/2018. Statutory Authority: RCW 49.17.010, [49.17].040, and[49.17].050 . 01-11-038 (Order 99-36), § 296-800-25010, filed 5/9/01, effective 9/1/01.]

296-800-25015 Provide handrails and stair railings.

[Statutory Authority: RCW 49.17.010, .040, .050, .060. 18-22-116 (Order 1628) § 296-800-25015, filed 11/06/2018, effective 12/07/2018. Statutory Authority: RCW 49.17.010, [49.17].040, and[49.17].050 . 02-16-047 (Order 02-02), § 296-800-25015, filed 8/1/02, effective 10/1/02; 01-23-060 (Order 01-29), § 296-800-25015, filed 11/20/01, effective 12/1/01; 01-11-038 (Order 99-36), § 296-800-25015, filed 5/9/01, effective 9/1/01.]

296-800-270 Workplace structural integrity.

[Statutory Authority: RCW 49.17.010, .040, .050, .060. 18-22-116 (Order 1628) § 296-800-270, filed 11/06/2018, effective 12/07/2018. Statutory Authority: RCW 49.17.010, [49.17].040, and[49.17].050 . 01-11-038 (Order 99-36), § 296-800-270, filed 5/9/01, effective 9/1/01.]

296-800-27005 Not overload floors or roofs.

[Statutory Authority: RCW 49.17.010, .040, .050, .060. 18-22-116 (Order 1628) § 296-800-27005, filed 11/06/2018, effective 12/07/2018. Statutory Authority: RCW 49.17.010, [49.17].040, and[49.17].050 . 01-11-038 (Order 99-36), § 296-800-27005, filed 5/9/01, effective 9/1/01.]

296-800-27010 Make sure that floors are safe.

[Statutory Authority: RCW 49.17.010, .040, .050, .060. 18-22-116 (Order 1628) § 296-800-27010, filed 11/06/2018, effective 12/07/2018. Statutory Authority: RCW 49.17.010, [49.17].040, and[49.17].050 . 01-11-038 (Order 99-36), § 296-800-27010, filed 5/9/01, effective 9/1/01.]

296-800-27015 Make sure floors can support equipment that moves or has motion.

[Statutory Authority: RCW 49.17.010, .040, .050, .060. 18-22-116 (Order 1628) § 296-800-27015, filed 11/06/2018, effective 12/07/2018. Statutory Authority: RCW 49.17.010, [49.17].040, and[49.17].050 . 01-11-038 (Order 99-36), § 296-800-27015, filed 5/9/01, effective 9/1/01.]

296-800-27020 Post approved load limits (weight limits) for floors.

[Statutory Authority: RCW 49.17.010, .040, .050, .060. 18-22-116 (Order 1628) § 296-800-27020, filed 11/06/2018, effective 12/07/2018. Statutory Authority: RCW 49.17.010, [49.17].040, and[49.17].050 . 01-23-060 (Order 01-29), § 296-800-27020, filed 11/20/01, effective 12/1/01; 01-11-038 (Order 99-36), § 296-800-27020, filed 5/9/01, effective 9/1/01.]

296-800-280 Basic electric rules.

[Statutory Authority: RCW 49.17.010, .040, .050, .060. 18-22-116 (Order 1628) § 296-800-280, filed 11/06/2018, effective 12/07/2018. Statutory Authority: RCW 49.17.010, .040, .050, and .060. 12-16-064 (Order 12-11), § 296-800-280, filed 07/31/12, effective 09/01/12. Statutory Authority: RCW 49.17.010, [49.17].040, and[49.17].050 . 01-23-060 (Order 01-29), § 296-800-280, filed 11/20/01, effective 12/1/01; 01-11-038 (Order 99-36), § 296-800-280, filed 5/9/01, effective 9/1/01.]

296-800-28005 Inspect all electrical equipment your employees use to make sure the equipment is safe.

[Statutory Authority: RCW 49.17.010, .040, .050, .060. 18-22-116 (Order 1628) § 296-800-28005, filed 11/06/2018, effective 12/07/2018. Statutory Authority: RCW 49.17.010, .040, .050, and .060. 12-16-064 (Order 12-11), § 296-800-28005, filed 07/31/12, effective 09/01/12. Statutory Authority: RCW 49.17.010, [49.17].040, and[49.17].050 . 01-23-060 (Order 01-29), § 296-800-28005, filed 11/20/01, effective 12/1/01; 01-11-038 (Order 99-36), § 296-800-28005, filed 5/9/01, effective 9/1/01.]

296-800-28010 Make sure all electrical equipment is used for its approved or listed purpose.

[Statutory Authority: RCW 49.17.010, .040, .050, .060. 18-22-116 (Order 1628) § 296-800-28010, filed 11/06/2018, effective 12/07/2018. Statutory Authority: RCW 49.17.010, .040, .050, and .060. 12-16-064 (Order 12-11), § 296-800-28010, filed 07/31/12, effective 09/01/12. Statutory Authority: RCW 49.17.010, [49.17].040, and[49.17].050 . 01-23-060 (Order 01-29), § 296-800-28010, filed 11/20/01, effective 12/1/01; 01-11-038 (Order 99-36), § 296-800-28010, filed 5/9/01, effective 9/1/01.]

296-800-28015 Make sure electrical equipment used or located in wet or damp locations is designed for such use.

[Statutory Authority: RCW 49.17.010, .040, .050, .060. 18-22-116 (Order 1628) § 296-800-28015, filed 11/06/2018, effective 12/07/2018. Statutory Authority: RCW 49.17.010, .040, .050, and .060. 12-16-064 (Order 12-11), § 296-800-28015, filed 07/31/12, effective 09/01/12. Statutory Authority: RCW 49.17.010, [49.17].040, and[49.17].050 . 01-11-038 (Order 99-36), § 296-800-28015, filed 5/9/01, effective 9/1/01.]

296-800-28020 Make sure electrical equipment that is not marked by the manufacturer can’t be used.

[Statutory Authority: RCW 49.17.010, .040, .050, .060. 18-22-116 (Order 1628) § 296-800-28020, filed 11/06/2018, effective 12/07/2018. Statutory Authority: RCW 49.17.010, .040, .050, and .060. 12-16-064 (Order 12-11), § 296-800-28020, filed 07/31/12, effective 09/01/12. Statutory Authority: RCW 49.17.010, [49.17].040, and[49.17].050 . 01-23-060 (Order 01-29), § 296-800-28020, filed 11/20/01, effective 12/1/01; 01-11-038 (Order 99-36), § 296-800-28020, filed 5/9/01, effective 9/1/01.]

296-800-28022 Identify disconnecting means.

[Statutory Authority: RCW 49.17.010, .040, .050, .060. 18-22-116 (Order 1628) § 296-800-28022, filed 11/06/2018, effective 12/07/2018. Statutory Authority: RCW 49.17.010, .040, .050, and .060. 12-16-064 (Order 12-11), § 296-800-28022, filed 07/31/12, effective 09/01/12. Statutory Authority: RCW 49.17.010, [49.17].040, and[49.17].050 . 01-11-038 (Order 99-36), § 296-800-28022, filed 5/9/01, effective 9/1/01.]

296-800-28025 Maintain electrical fittings, boxes, cabinets, and outlets in good condition.

[Statutory Authority: RCW 49.17.010, .040, .050, .060. 18-22-116 (Order 1628) § 296-800-28025, filed 11/06/2018, effective 12/07/2018. Statutory Authority: RCW 49.17.010, .040, .050, and .060. 12-16-064 (Order 12-11), § 296-800-28025, filed 07/31/12, effective 09/01/12. Statutory Authority: RCW 49.17.010, [49.17].040, and[49.17].050 . 01-23-060 (Order 01-29), § 296-800-28025, filed 11/20/01, effective 12/1/01; 01-11-038 (Order 99-36), § 296-800-28025, filed 5/9/01, effective 9/1/01.]

296-800-28027 Working space around electrical equipment.

[Statutory Authority: RCW 49.17.010, .040, .050, .060. 18-22-116 (Order 1628) § 296-800-28027, filed 11/06/2018, effective 12/07/2018. Statutory Authority: RCW 49.17.010, .040, .050, and .060. 12-16-064 (Order 12-11), § 296-800-28027, filed 07/31/12, effective 09/01/12.]

296-800-28030 Maintain all flexible cords and cables in good condition and use safely.

[Statutory Authority: RCW 49.17.010, .040, .050, .060. 18-22-116 (Order 1628) § 296-800-28030, filed 11/06/2018, effective 12/07/2018. Statutory Authority: RCW 49.17.010, .040, .050, and .060. 12-16-064 (Order 12-11), § 296-800-28030, filed 07/31/12, effective 09/01/12. Statutory Authority: RCW 49.17.010, [49.17].040, and[49.17].050 . 01-23-060 (Order 01-29), § 296-800-28030, filed 11/20/01, effective 12/1/01; 01-11-038 (Order 99-36), § 296-800-28030, filed 5/9/01, effective 9/1/01.]

296-800-28035 Guard electrical equipment to prevent your employees from electrical hazards.

[Statutory Authority: RCW 49.17.010, .040, .050, .060. 18-22-116 (Order 1628) § 296-800-28035, filed 11/06/2018, effective 12/07/2018. Statutory Authority: RCW 49.17.010, .040, .050, and .060. 12-16-064 (Order 12-11), § 296-800-28035, filed 07/31/12, effective 09/01/12. Statutory Authority: RCW 49.17.010, [49.17].040, and[49.17].050 . 01-11-038 (Order 99-36), § 296-800-28035, filed 5/9/01, effective 9/1/01.]

296-800-28040 Make sure electrical equipment is effectively grounded.

[Statutory Authority: RCW 49.17.010, .040, .050, .060. 18-22-116 (Order 1628) § 296-800-28040, filed 11/06/2018, effective 12/07/2018. Statutory Authority: RCW 49.17.010, .040, .050, and .060. 12-16-064 (Order 12-11), § 296-800-28040, filed 07/31/12, effective 09/01/12. Statutory Authority: RCW 49.17.010, [49.17].040, and[49.17].050 . 02-16-047 (Order 02-02), § 296-800-28040, filed 8/1/02, effective 10/1/02; 01-23-060 (Order 01-29), § 296-800-28040, filed 11/20/01, effective 12/1/01; 01-11-038 (Order 99-36), § 296-800-28040, filed 5/9/01, effective 9/1/01.]

296-800-28045 Make sure electrical equipment has overcurrent protection.

[Statutory Authority: RCW 49.17.010, .040, .050, .060. 18-22-116 (Order 1628) § 296-800-28045, filed 11/06/2018, effective 12/07/2018. Statutory Authority: RCW 49.17.010, .040, .050, and .060. 12-16-064 (Order 12-11), § 296-800-28045, filed 07/31/12, effective 09/01/12. Statutory Authority: RCW 49.17.010, [49.17].040, and[49.17].050 . 02-16-047 (Order 02-02), § 296-800-28045, filed 8/1/02, effective 10/1/02; 01-11-038 (Order 99-36), § 296-800-28045, filed 5/9/01, effective 9/1/01.]

296-800-300 Portable fire extinguishers.

[Statutory Authority: RCW 49.17.010, .040, .050, .060. 18-22-116 (Order 1628) § 296-800-300, filed 11/06/2018, effective 12/07/2018. Statutory Authority: RCW 49.17.010, [49.17].040, and[49.17].050 . 01-23-060 (Order 01-29), § 296-800-300, filed 11/20/01, effective 12/1/01; 01-11-038 (Order 99-36), § 296-800-300, filed 5/9/01, effective 9/1/01.]

296-800-30005 Provide portable fire extinguishers in your workplace.

[Statutory Authority: RCW 49.17.010, .040, .050, .060. 18-22-116 (Order 1628) § 296-800-30005, filed 11/06/2018, effective 12/07/2018. Statutory Authority: RCW 49.17.010, [49.17].040, and[49.17].050 . 01-11-038 (Order 99-36), § 296-800-30005, filed 5/9/01, effective 9/1/01.]

296-800-30010 Select and distribute portable fire extinguishers in your workplace.

[Statutory Authority: RCW 49.17.010, .040, .050, .060. 18-22-116 (Order 1628) § 296-800-30010, filed 11/06/2018, effective 12/07/2018. Statutory Authority: RCW 49.17.010, [49.17].040, and[49.17].050 . 01-23-060 (Order 01-29), § 296-800-30010, filed 11/20/01, effective 12/1/01; 01-11-038 (Order 99-36), § 296-800-30010, filed 5/9/01, effective 9/1/01.]

296-800-30015 Make sure that portable fire extinguishers are kept fully charged, in operable condition, and left in their designated places.

[Statutory Authority: RCW 49.17.010, .040, .050, .060. 18-22-116 (Order 1628) § 296-800-30015, filed 11/06/2018, effective 12/07/2018. Statutory Authority: RCW 49.17.010, [49.17].040, and[49.17].050 . 01-11-038 (Order 99-36), § 296-800-30015, filed 5/9/01, effective 9/1/01.]

296-800-30020 Inspect and test all portable fire extinguishers.

[Statutory Authority: Statutory Authority: RCW 49.17.010, .040, .050, .060. 18-22-116 (Order 1628) § 296-800-30020, filed 11/06/2018, effective 12/07/2018 11/06/2018, effective 12/07/2018. Statutory Authority: RCW 49.17.010, [49.17].040, and[49.17].050 . 01-23-060 (Order 01-29), § 296-800-30020, filed 11/20/01, effective 12/1/01; 01-11-038, § 296-800-30020, filed 5/9/01, effective 9/1/01.]

296-800-30025 Train your employees to use portable fire extinguishers.

[Statutory Authority: RCW 49.17.010, .040, .050, .060. 18-22-116 (Order 1628) § 296-800-30015, filed 11/06/2018, effective 12/07/2018. Statutory Authority: RCW 49.17.010, [49.17].040, and[49.17].050 . 01-11-038 (Order 99-36), § 296-800-30025, filed 5/9/01, effective 9/1/01.]

296-800-310 Exit routes and employee alarm systems.

[Statutory Authority: RCW 49.17.010, .040, .050, .060. 18-22-116 (Order 1628) § 296-800-310, filed 11/06/2018, effective 12/07/2018. Statutory Authority: RCW 49.17.010, .040, .050, and .060. 12-24-071 (Order 12-20), § 296-800-310, filed 12/04/12, effective 01/04/13. Statutory Authority: RCW 49.17.010, [49.17].040, and[49.17].050 . 01-23-060 (Order 01-29), § 296-800-310, filed 11/20/01, effective 12/1/01; 01-11-038, § 296-800-310, filed 5/9/01, effective 9/1/01.]

296-800-31005 Provide an adequate number of exit routes.

[Statutory Authority: RCW 49.17.010, .040, .050, .060. 18-22-116 (Order 1628) § 296-800-31005, filed 11/06/2018, effective 12/07/2018. Statutory Authority: RCW 49.17.010, [49.17].040, and[49.17].050 . 01-11-038 (Order 99-36), § 296-800-31005, filed 5/9/01, effective 9/1/01.]

296-800-31010 Make sure the exit routes are large enough.

[Statutory Authority: RCW 49.17.010, .040, .050, .060. 18-22-116 (Order 1628) § 296-800-31010, filed 11/06/2018, effective 12/07/2018. Statutory Authority: RCW 49.17.010, .040, .050, and .060. 11-04-080 (Order 10-41), § 296-307-31010, filed 02/01/11, effective 04/01/11. Statutory Authority: RCW 49.17.010, [49.17].040, and[49.17].050 . 01-23-060 (Order 01-29), § 296-800-31010, filed 11/20/01, effective 12/1/01; 01-11-038 (Order 99-36), § 296-800-31010, filed 5/9/01, effective 9/1/01.]

296-800-31015 Make sure that exit routes meet their specific design and construction requirements.

[Statutory Authority: RCW 49.17.010, .040, .050, .060. 18-22-116 (Order 1628) § 296-800-31015, filed 11/06/2018, effective 12/07/2018. Statutory Authority: RCW 49.17.010, [49.17].040, and[49.17].050 . 01-11-038 (Order 99-36), § 296-800-31015, filed 5/9/01, effective 9/1/01.]

296-800-31020 Make sure that each exit route leads outside.

[Statutory Authority: RCW 49.17.010, .040, .050, .060. 18-22-116 (Order 1628) § 296-800-31020, filed 11/06/2018, effective 12/07/2018. Statutory Authority: RCW 49.17.010, [49.17].040, and[49.17].050 . 01-11-038 (Order 99-36), § 296-800-31020, filed 5/9/01, effective 9/1/01.]

296-800-31025 Provide unobstructed access to exit routes.

[Statutory Authority: RCW 49.17.010, .040, .050, .060. 18-22-116 (Order 1628) § 296-800-31025, filed 11/06/2018, effective 12/07/2018. Statutory Authority: RCW 49.17.010, [49.17].040, and[49.17].050 . 01-11-038 (Order 99-36), § 296-800-31025, filed 5/9/01, effective 9/1/01.]

296-800-31030 Exit doors must be readily opened from the inside.

[Statutory Authority: RCW 49.17.010, .040, .050, .060. 18-22-116 (Order 1628) § 296-800-31030, filed 11/06/2018, effective 12/07/2018. Statutory Authority: RCW 49.17.010, [49.17].040, and[49.17].050 . 01-11-038 (Order 99-36), § 296-800-31030, filed 5/9/01, effective 9/1/01.]

296-800-31035 Use side-hinged doors to connect rooms to exit routes.

[Statutory Authority: RCW 49.17.010, .040, .050, .060. 18-22-116 (Order 1628) § 296-800-31035, filed 11/06/2018, effective 12/07/2018. Statutory Authority: RCW 49.17.010, [49.17].040, and[49.17].050 . 01-23-060 (Order 01-29), § 296-800-31035, filed 11/20/01, effective 12/1/01; 01-11-038 (Order 99-36), § 296-800-31035, filed 5/9/01, effective 9/1/01.]

296-800-31040 Provide outdoor exit routes that meet these requirements.

[Statutory Authority: RCW 49.17.010, .040, .050, .060. 18-22-116 (Order 1628) § 296-800-31040, filed 11/06/2018, effective 12/07/2018. Statutory Authority: RCW 49.17.010, [49.17].040, and[49.17].050 . 01-11-038 (Order 99-36), § 296-800-31040, filed 5/9/01, effective 9/1/01.]

296-800-31045 Minimize danger to employees while they are using emergency exit routes.

[Statutory Authority: RCW 49.17.010, .040, .050, .060. 18-22-116 (Order 1628) § 296-800-31045, filed 11/06/2018, effective 12/07/2018. Statutory Authority: RCW 49.17.010, [49.17].040, and[49.17].050 . 01-11-038 (Order 99-36), § 296-800-31045, filed 5/9/01, effective 9/1/01.]

296-800-31050 Marks exits adequately.

[Statutory Authority: RCW 49.17.010, .040, .050, .060. 18-22-116 (Order 1628) § 296-800-31050, filed 11/06/2018, effective 12/07/2018. Statutory Authority: RCW 49.17.010, 49.17.040, 49.17.050, and 49.17.060. 03-18-090 (Order 03-15), § 296-800-31050, filed 9/2/03, effective 11/1/03. Statutory Authority: RCW 49.17.010,[49.17].040 , and [49.17].050. 01-11-038 (Order 99-36), § 296-800-31050, filed 5/9/01, effective 9/1/01.]

296-800-31053 Provide adequate lighting for exit routes and signs.

[Statutory Authority: RCW 49.17.010, .040, .050, .060. 18-22-116 (Order 1628) § 296-800-31053, filed 11/06/2018, effective 12/07/2018. Statutory Authority: RCW 49.17.010, [49.17].040, and[49.17].050 . 01-11-038 (Order 99-36), § 296-800-31053, filed 5/9/01, effective 9/1/01.]

296-800-31055 Maintain the fire retardant properties of paints or other coatings.

[Statutory Authority: RCW 49.17.010, .040, .050, .060. 18-22-116 (Order 1628) § 296-800-31055, filed 11/06/2018, effective 12/07/2018. Statutory Authority: RCW 49.17.010, [49.17].040, and[49.17].050 . 01-11-038 (Order 99-36), § 296-800-31055, filed 5/9/01, effective 9/1/01.]

296-800-31060 Maintain emergency safeguards.

[Statutory Authority: RCW 49.17.010, .040, .050, .060. 18-22-116 (Order 1628) § 296-800-31060, filed 11/06/2018, effective 12/07/2018. Statutory Authority: RCW 49.17.010, [49.17].040, and[49.17].050 . 01-11-038 (Order 99-36), § 296-800-31060, filed 5/9/01, effective 9/1/01.]

296-800-31065 Maintain exit routes during construction and repair.

[Statutory Authority: RCW 49.17.010, .040, .050, .060. 18-22-116 (Order 1628) § 296-800-31065, filed 11/06/2018, effective 12/07/2018. Statutory Authority: RCW 49.17.010, [49.17].040, and[49.17].050 . 01-11-038 (Order 99-36), § 296-800-31065, filed 5/9/01, effective 9/1/01.]

296-800-31067 Provide doors in freezer or refrigerated rooms that open from the inside.

[Statutory Authority: RCW 49.17.010, .040, .050, .060. 18-22-116 (Order 1628) § 296-800-31067, filed 11/06/2018, effective 12/07/2018. Statutory Authority: RCW 49.17.010, [49.17].040, and[49.17].050 . 01-11-038 (Order 99-36), § 296-800-31067, filed 5/9/01, effective 9/1/01.]

296-800-31070 Install and maintain an appropriate employee alarm system.

[Statutory Authority: RCW 49.17.010, .040, .050, .060. 18-22-116 (Order 1628) § 296-800-31067, filed 11/06/2018, effective 12/07/2018. Statutory Authority: RCW 49.17.010, [49.17].040, and[49.17].050 . 01-11-038 (Order 99-36), § 296-800-31070, filed 5/9/01, effective 9/1/01.]

296-800-31075 Establish procedures for sounding emergency alarms.

[Statutory Authority: RCW 49.17.010, .040, .050, .060. 18-22-116 (Order 1628) § 296-800-31075, filed 11/06/2018, effective 12/07/2018. Statutory Authority: RCW 49.17.010, [49.17].040, and[49.17].050 . 01-11-038 (Order 99-36), § 296-800-31075, filed 5/9/01, effective 9/1/01.]

296-800-31080 Test the employee alarm system.

[Statutory Authority: RCW 49.17.010, .040, .050, .060. 18-22-116 (Order 1628) § 296-800-31080, filed 11/06/2018, effective 12/07/2018. Statutory Authority: RCW 49.17.010, [49.17].040, and[49.17].050 . 01-11-038 (Order 99-36), § 296-800-31080, filed 5/9/01, effective 9/1/01.]

296-800-320 Accident reporting and investigating.

[Statutory Authority: RCW 49.17.010, .040, .050, .060. 18-22-116 (Order 1628) § 296-800-320, filed 11/06/2018, effective 12/07/2018. Statutory Authority: RCW 49.17.010, 040, .050, and .060. 09-01-058 (Order 08-27), § 296-800-320, filed 12/23/08, effective 03/01/09. Statutory Authority: RCW 49.17.010, .040, .050, and .060. 08-05-012 (Order 07-44), § 296-800-320, filed 02/08/08, effective 04/01/08. Statutory Authority: RCW 49.17.010, [49.17].040, and[49.17].050 . 01-23-060 (Order 01-29), § 296-800-320, filed 11/20/01, effective 12/1/01; 01-11-038 (Order 99-36), § 296-800-320, filed 5/9/01, effective 9/1/01.]

296-800-32010 Make sure that any equipment involved in a work-related accident is not moved.

[Statutory Authority: RCW 49.17.010, .040, .050, .060. 18-22-116 (Order 1628) § 296-800-32010, filed 11/06/2018, effective 12/07/2018. Statutory Authority: RCW 49.17.010, .040, .050, and .060. 08-05-012 (Order 07-44), § 296-800-32010, filed 02/08/08, effective 04/01/08. Statutory Authority: RCW 49.17.010, [49.17].040, and[49.17].050 . 01-11-038 (Order 99-36), § 296-800-32010, filed 5/9/01, effective 9/1/01.]

296-800-32015 Assign people to assist the department of labor and industries.

[Statutory Authority: RCW 49.17.010, .040, .050, .060. 18-22-116 (Order 1628) § 296-800-32015, filed 11/06/2018, effective 12/07/2018. Statutory Authority: RCW 49.17.010, .040, .050, and .060. 08-05-012 (Order 07-44), § 296-800-32015, filed 02/08/08, effective 04/01/08. Statutory Authority: RCW 49.17.010, [49.17].040, and[49.17].050 . 01-11-038 (Order 99-36), § 296-800-32015, filed 5/9/01, effective 9/1/01.]

296-800-32020 Conduct a preliminary investigation for all serious injuries.

[Statutory Authority: RCW 49.17.010, .040, .050, .060. 18-22-116 (Order 1628) § 296-800-32020, filed 11/06/2018, effective 12/07/2018. Statutory Authority: RCW 49.17.010, [49.17].040, and[49.17].050 . 01-11-038 (Order 99-36), § 296-800-32020, filed 5/9/01, effective 9/1/01.]

296-800-32025 Document the investigation findings.

[Statutory Authority: RCW 49.17.010, .040, .050, .060. 18-22-116 (Order 1628) § 296-800-32025, filed 11/06/2018, effective 12/07/2018. Statutory Authority: RCW 49.17.010, [49.17].040, and[49.17].050 . 02-16-047 (Order 02-02), § 296-800-32025, filed 8/1/02, effective 10/1/02; 01-11-038 (Order 99-36), § 296-800-32025, filed 5/9/01, effective 9/1/01.]

296-800-330 Releasing accident investigation reports.

[Statutory Authority: RCW 49.17.010, .040, .050, .060. 18-22-116 (Order 1628) § 296-800-330, filed 11/06/2018, effective 12/07/2018. Statutory Authority: RCW 49.17.010, [49.17].040, and[49.17].050 . 01-11-038 (Order 99-36), § 296-800-330, filed 5/9/01, effective 9/1/01.]

296-800-340 Protecting the identity of the source of confidential information.

[Statutory Authority: RCW 49.17.010, .040, .050, .060. 18-22-116 (Order 1628) § 296-800-340, filed 11/06/2018, effective 12/07/2018. Statutory Authority: RCW 49.17.010, [49.17].040, and[49.17].050 . 01-11-038 (Order 99-36), § 296-800-340, filed 5/9/01, effective 9/1/01.]

296-800-360 Using standards from national organizations and federal agencies.

[Statutory Authority: RCW 49.17.010, .040, .050, .060. 18-22-116 (Order 1628) § 296-800-360, filed 11/06/2018, effective 12/07/2018. Statutory Authority: RCW 49.17.010, [49.17].040, and[49.17].050 . 01-11-038 (Order 99-36), § 296-800-360, filed 5/9/01, effective 9/1/01.]

296-800-36005 Comply with standards national organizations or federal agencies when referenced in WISHA rules.

[Statutory Authority: RCW 49.17.010, .040, .050, .060. 18-22-116 (Order 1628) § 296-800-36005, filed 11/06/2018, effective 12/07/2018. Statutory Authority: RCW 49.17.010, [49.17].040, and [49.17].050 . 01-11-038 (Order 99-36), § 296-800-36005, filed 5/9/01, effective 9/1/01.]